DOMUSA TEKNIK

ROOM-SEALED CAST IRON CONDENSING BOILER

JAKA HFD CONDENS

ErP Compliant A

HIGH PERFORMANCE
STAINLESS STEEL CONDENSER
CAST IRON HEAT EXCHANGER
POLYPROPYLENE BALANCED FLUE



The most advanced technology
at the most reasonable price

The Jaka HFD CONDENS takes advantage of the condensation effect of the combustion gases reaching performances higher than 104% LHV.

1. GAS OUTLET
2. CONDENSATES
3. CONDENSING DRAIN

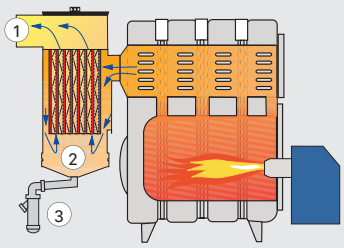

SAVINGS

To take advantage of this effect, the combustion gas temperature must be reduced to below the dew point temperature. This gas temperature reduction takes place in the condenser. This condenser is especially designed to prevent unburnt combustion fuel from depositing on the condenser interchange surface, thus reducing maintenance costs.

The JAKA HFD CONDENS boiler is equipped with a modulating hot water production system that stabilises the water temperature, adapting it to the temperature selected on the control panel, regardless of the water flow required and of the cold water intake temperature at any given time.

Modulation enables the continuous adaptation of the boiler power to the hot water demand at any time, allowing it to work at lower boiler temperatures. With this system cold returns, as well as low fume temperatures, are achieved even when producing DHW, by taking advantage of the latent heat to reduce consumption.

Silent

The effective acoustic isolation of the body and the boiler housing, as well as the use of an airtight burner, makes this boiler a discrete companion.

Ecological

The JAKA HFD CONDENS boiler permits the reduction of contaminating CO_2 emissions, contributing to the reduction of the greenhouse effect, as this boiler consumes less energy than a conventional boiler to provide the same power and performance.

Cast Iron Heat Exchanger

The body of the heat exchanger is made of cast iron which ensures its long life.



JAKA HFD CONDENS

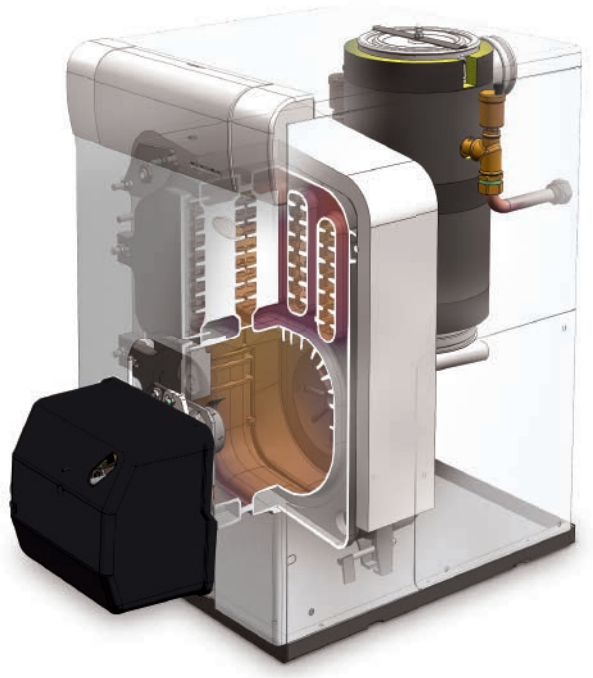

SIMPLICITY OF INSTALLATION

The design simplifies the installation for the professional, allowing for fast installation.
As it does not use air from the room for combustion, the boiler can even be installed in rooms without ventilation, thus making installation easier.

Having a low smoke temperature and a safety smoke temperature sensor, the JAKA HFD CONDENS can be installed with **polypropylene balanced flues** which ease the installation and reduce cost.

OPTIONS



LAGO CLIMATE CONTROL
For adjustments to direct or mixed circuits depending on outdoor temperature.

JAKA HFD CONDENS HYDRAULIC KIT
An optional kit is offered which includes a mixing valve with a servo motor to adjust the flow temperature to the required temperature.

Equipment:
Expassion vessel
3 way diverter valve
3 way diverter valve motor
Heating pump
Non returning valve
Safety valve

This kit needs to be connected to a LAGO V or a LAGO BVS controller.



DIMENSIONS

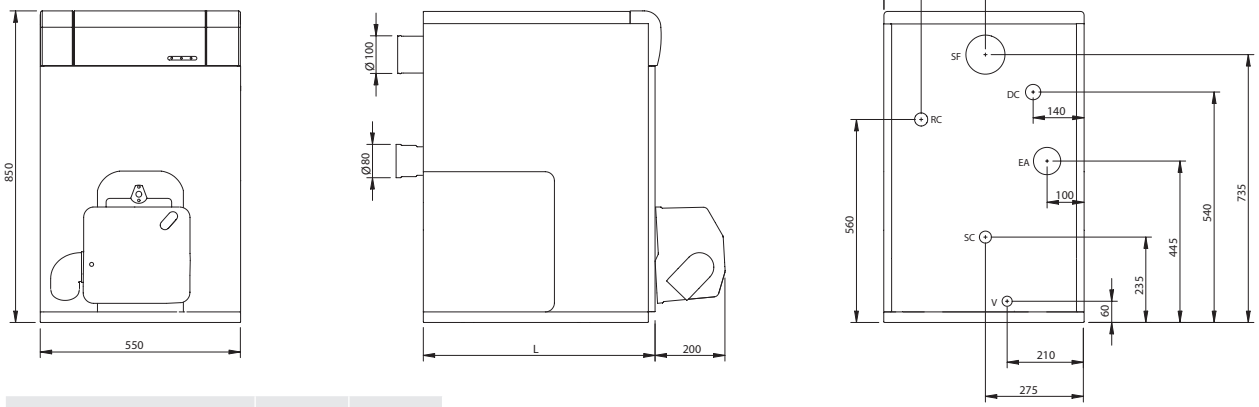

Models	DC RC	L
JAKA HFD 30 CONDENS	1"	640
JAKA HFD 20 CONDENS	¾"	540

OPTIONS

- Gas discharge kit
- Hydraulic kit:
  - · Expanssion vessel
  - · 3 way diverter valve
  - · 3 way diverter valve motor
  - · Heating pump
  - · Non-returning valve
  - · Safety valve
- Control and regulation (required for Jaka HFD Condens Hydraulic Kit)

EQUIPMENT

- Cast Iron Heat Exchanger
- EPOXY coated casing
- Sealed burner
- Control panel that includes:
  - · Control thermostat
  - · Safety thermostat
  - · On/Off light switch
  - · Thermometer
  - · Prewiring for LAGO Controller

JAKA HFD CONDENS INSTALLATION EXAMPLE

Maximum discharge length

	A+B	C
JAKA 20 HFD CONDENS	15m Ø 100	8
JAKA 30 HFD CONDENS	15m Ø 100	6

Equivalences

Diameter	90º Curve	45º Curve
80/125	1m.	0.5m.
100	1m.	0.5m.

1 horizontal metre equals 2 vertical meters.

Nota: Due to the low fume temperature, the gas outlet must be airtight and made of an anticorrosive material due to the condensation of the combustion gas water vapour.

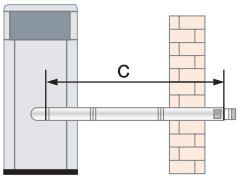

Horizontal balanced flue outlet

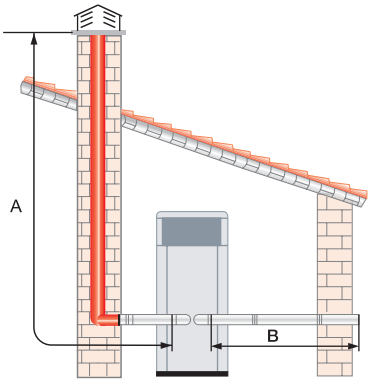

Double flow outlet

Model	Nominal power kW		Water content	Weight	Heating Efficiency Class
	50°C / 30°C	80°C / 60°C	L	kg	
JAKA 20 HFD CONDENS	20.3	19.1	14	84	A
JAKA 30 HFD CONDENS	30.2	28.7	19.2	194	

DOMUSA TEKNIK

HEADQUARTERS & FACTORY
Bº San Esteban, s/n.
20737 ERREZIL (Gipuzkoa) Spain
Tel.: +34 943 813 899
domusateknik@domusateknik.com
www.domusateknik.com

WAREHOUSE
Atxubiaga, 13
Bº Landeta
20730 Azpeitia
(Gipuzkoa) Spain

CERTIFICATION ISO - 9001 ISO - 14001
HUMANITY AT WORK
MONDRAGON

000EXC0028 February 2020