INSTALLATION AND OPERATING INSTRUCTIONS

➥ JAKA HFD CONDENS

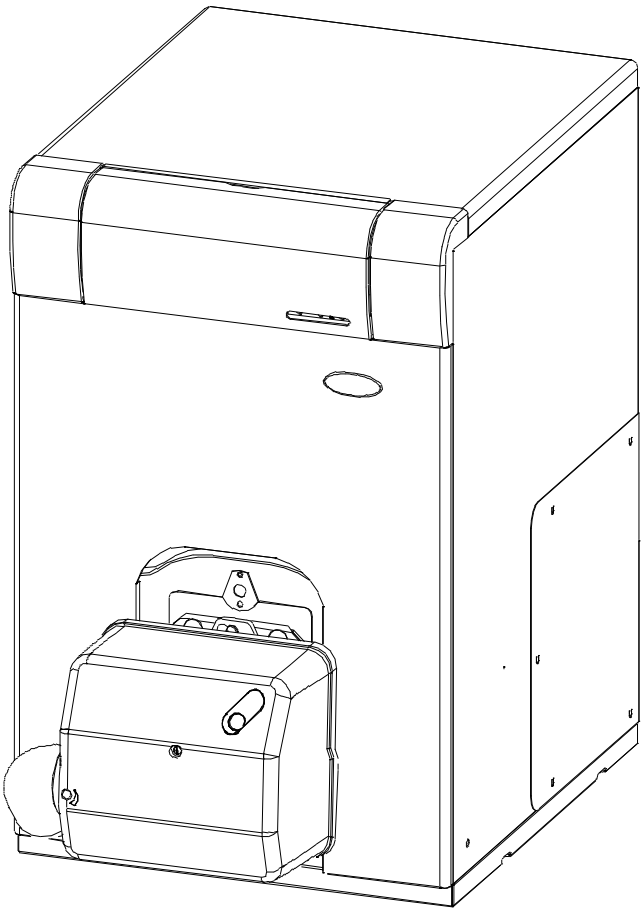

Applus ISO 14001 MA-3661/17 Systems Certification

Applus ISO 9001 EC-8890/17 Systems Certification

DOMUSA TEKNIK

Thank you for choosing a DOMUSA TEKNIK heating boiler. You have chosen a boiler that, with a suitable hydraulic installation and using oil for fuel, will provide the ideal level of comfort for your home.

This manual forms an essential part of the product and it must be given to the user. Read the warnings and recommendations in the manual carefully, as they contain important information on the safety, use and maintenance of the installation.

These boilers must be installed by qualified personnel only, in accordance with the legislation in force and following the manufacturer's instructions.

The start-up of these boilers and any maintenance operations must only be carried out by Official Technical Assistance Services of DOMUSA TEKNIK.

Incorrect installation of these boilers could result in damage to people, animals or property, and the manufacturer will hold no liability in such cases.

DOMUSA TEKNIK informs all parties concerned that, in compliance with section 1 of the first additional provision of Law 11/1997, the responsibility for delivering packaging waste or used packaging for its proper environmental management will be that of the final owner of the product (Article 18.1 Royal Decree 782/1998). At the end of its useful life, the product must be taken to a selected collection point for electrical and electronic equipment or must be returned to the distributor at the time of purchasing a new equivalent appliance. For more detailed information on the collection schemes available, contact either the collection facilities of the local authority or the distributor where the purchase was made.

CONTENTS Page

1 LIST OF COMPONENTS....2
2 CONTROL COMPONENTS....3
3 INSTALLATION INSTRUCTIONS....4
3.1 LOCATION....4
3.2 INSTALLATION AND ELECTRICAL CONNECTION OF THE BOILER....4
3.3 HYDRAULIC INSTALLATION....4
3.4 ELECTRICAL CONNECTION....5
3.5 FUEL INSTALLATION....5
3.6 DRAINING THE BOILER....5
3.7 PRECAUTIONS FOR PREVENTING NOISE DURING OPERATION....5
3.8 FILLING AND BLEEDING THE INSTALLATION....5
4 COMBUSTION PRODUCT REMOVAL....6
4.1 EXTERNAL POSITION OF THE GAS EVACUATION PIPES TERMINAL....6
4.2 PREPARATION OF THE BURNER AIR INTAKE FOR BALANCED FLUE OPERATION MODE....7
4.3 ø80 / ø100 (TYPE C_{53}) DUAL DUCT SYSTEM FOR COMBUSTION PRODUCT REMOVAL AND AIR INTAKE....8
4.4 CHANGING FROM DUAL DUCT FUME REMOVAL TO COAXIAL FUME REMOVAL....8
4.5 CONCENTRIC HORIZONTAL DUCT FOR COMBUSTION PRODUCT REMOVAL AND AIR INTAKE ø80-125 (TYPE C_{13})....10
4.6 CONCENTRIC VERTICAL DUCT FOR COMBUSTION PRODUCT REMOVAL AND AIR INTAKE ø80-125 (TYPE C_{33})....11
5 OPERATION....12
5.1 BOILER FUNCTIONING....12
5.2 OPERATING WITH A SANIT HOT WATER TANK (OPTIONAL)....12
6 SAFETY CUT-OUTS....12
6.1 EXCESSIVE TEMPERATURE SAFETY CUT-OUTS (THERMOSTAT T_S)....12
6.2 EXCESSIVE FUME TEMPERATURE SAFETY CUT-OUT (THERMOSTAT T_H)....12
6.3 BURNER CUT-OUT....12
7 CLIMATE CONTROL (OPTIONAL) :....13
8 SHUTTING DOWN THE BOILER....13
9 START-UP....13
10 FIRST START-UP....13
11 DELIVERY OF THE SYSTEM....13
12 BOILER MAINTENANCE....14
12.1 CLEANING THE BOILER....14
12.2 BOILER WATER CHARACTERISTICS....15
12.3 CONDENSATE DRAIN-OFF....15
13 TECHNICAL CHARACTERISTICS....16
14 ELECTRICAL DIAGRAM....17
15 DIAGRAMS AND MEASUREMENTS....18
16 BURNER....19
16.1 ASSEMBLY....19
16.2 BURNER START-UP....19
16.3 ADJUSTING THE COMBUSTION CONDITIONS....19
16.4 PRIMARY AIR ADJUSTMENT....20
16.5 COMBUSTION LINE ADJUSTMENT....20
16.6 CORRECT POSITION OF ELECTRODES....20
16.7 OIL PRESSURE ADJUSTMENT....21
16.8 OIL SUPPLY PIPING DIAGRAMS....21
16.9 TECHNICAL SPECIFICATIONS....22
16.10 RECOMMENDED NOZZLE AND PUMP PRESSURE....22
16.11 ELECTRICAL CONNECTION DIAGRAM....23
16.12 QUICK CONNECTOR....24
16.13 BURNER CONTROL OPERATING SEQUENCE....25
16.14 BURNER ERROR CODE....26
16.15 BOILER FAILURES....26
16.16 THERMOSTAT....26
17 SPARES LIST....27
17.1 BURNER....27
17.2 BOILER....28
17.3 FRONT ELECTRICS....29

1 LIST OF COMPONENTS

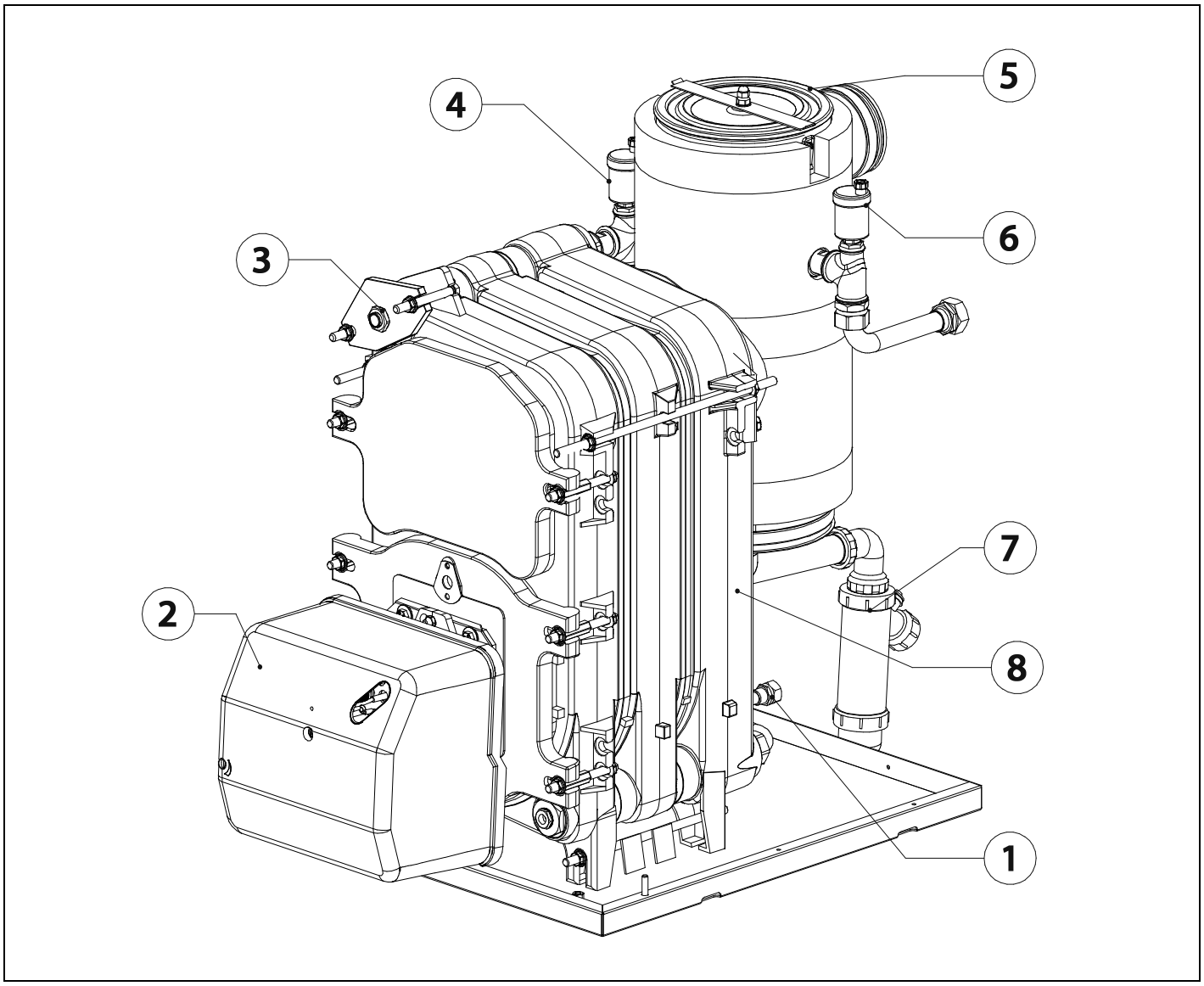

1. Blow-off valve.
2. Domestic sealed oil burner.
3. Bulb-holder sheath.
4. Automatic air bleed valve.
5. INOX Condenser output diam. 100.
6. Automatic air bleed valve.
7. Condensate siphon.
8. Cast body.

2 CONTROL COMPONENTS

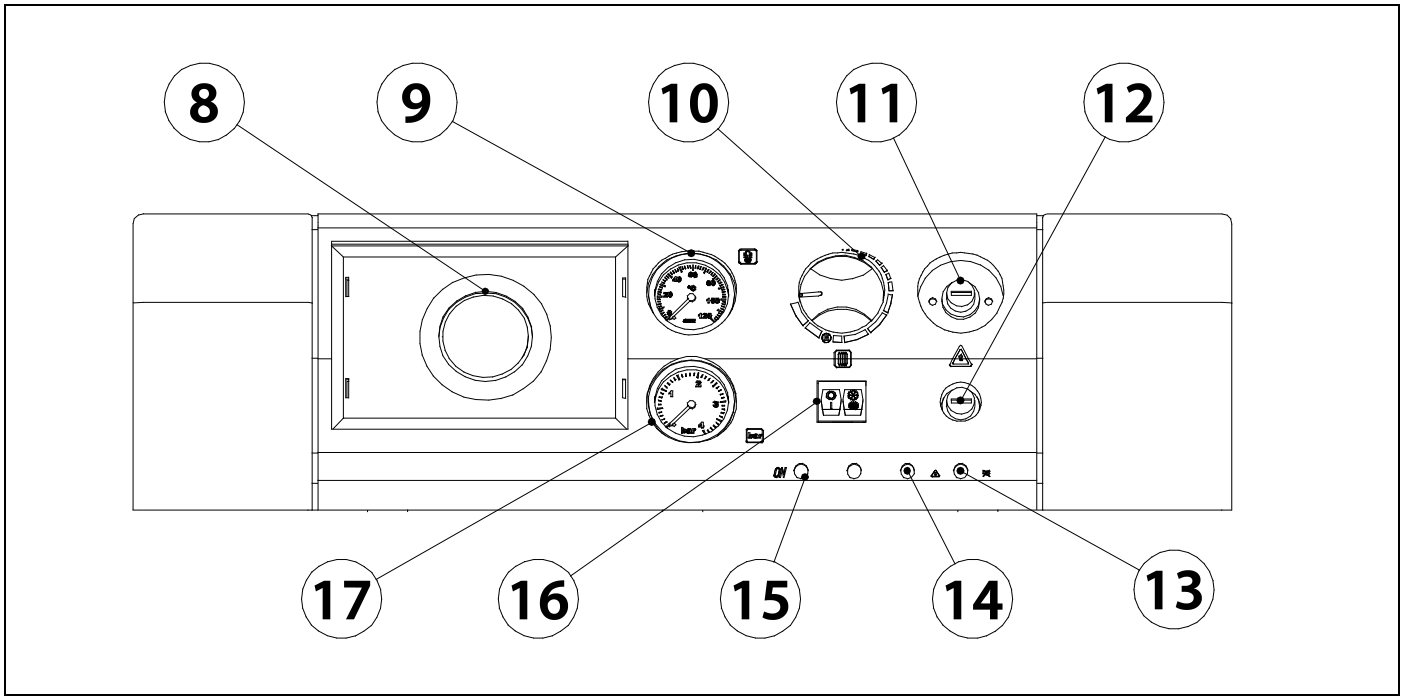

8. Climate control (optional) :

It is an optional element which allows us to regulate the temperature of the installation according to the needs of the household and the outside temperature.

9. Thermometer:

Indicates the water temperature of the boiler.

10. Control thermostat.

With this we can select the operating temperature of the central heating, stopping the burner when the boiler temperature is equal to that selected or keeping it going when it is less.

11. Boiler safety thermostat:

This is a cut-out mechanism to ensure the boiler temperature does not exceed 110ºC.

12. Fume safety thermostat:

This safety thermostat operates when the temperature of the combustion products exceeds 110ºC, in order to protect the polypropylene duct.

13. Burner blocked pilot light:

When lit, it indicates that the boiler operation has been blocked due to blocking of the burner.

14. Blocked due to temperature pilot light:

When lit, it indicates that the boiler operation has been blocked due to excessive temperature (higher than 110ºC).

15. ON position pilot light:

When lit, it indicates that the boiler is in "normal operation (ON)" mode.

16. Master switch:

This lets us turn the boiler on and off by pressing the "O/I" switch. By pressing the "❄/☼" switch, we can select either summer service (DHW only) or Winter service (heating + DHW).

17. Manometer:

Indicates the water pressure of the installation.

3 INSTALLATION INSTRUCTIONS

The boiler must be installed by personnel authorised by the Department of Industry in accordance with the applicable regulations and standards in force. However, the following recommendations must be complied with when installing the boiler:

3.1 Location

The boiler must be installed in a enough ventilated room and sufficient access space must be maintained to carry out preventive or corrective maintenance operations.

3.2 Installation and electrical connection of the boiler.

The pictures below show the two burner assembly operations:

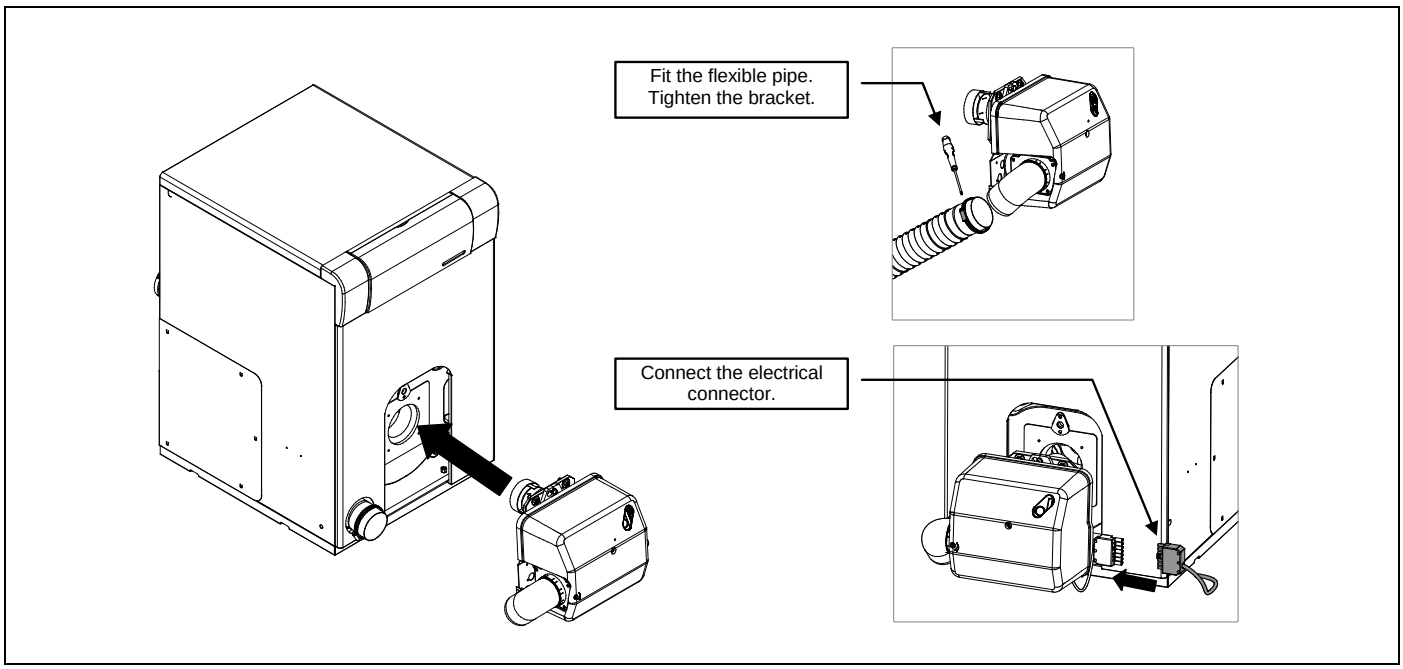

3.3 Hydraulic Installation

The hydraulic installation must be made by qualified personnel. The applicable installation legislation is to be complied with, and the following recommendations should also be taken into account:

- The inside of the installation piping should be thoroughly cleaned before switching on the boiler.
- We recommend inserting cut-off valves between the installation piping and the boiler to simplify maintenance tasks.
- Before starting up the unit, it is essential to install the condensation siphon supplied with the boiler documentation, in the condensation drain tube on the back of the boiler.
- When the pressure of the domestic water supply exceeds 7 bars, a pressure reducer must be fitted.
- **The condensation pipe must lead to a drain outlet**, as the Jaka HFD Condens is a condensing boiler and a large amount of water may be generated. This connection must be made in compliance with the regulations for draining off condensation water to the drainage system.
- Fill the siphon with water before starting up the unit, to prevent fumes coming out of it.

3.4 Electrical Connection

The boiler is equipped for connection to 230 V in pins 1 and 2. **Remember to earth the appliance.**

The boiler has two terminals prepared for connecting the room thermostat (see wiring diagram). The bridge that joins the terminals must therefore be removed and the room thermostat connected there.

3.5 Fuel installation

The **Jaka HFD Condens** boiler is supplied with a **Domestic** oil burner (see model in "Technical Characteristics"). For the fuel installation, proceed in accordance with the burner instructions enclosed with this manual (see "Burner" section). The oil line installation and start-up of the burner must be carried out by qualified, authorised personnel.

3.6 Draining the boiler

The boiler is emptied by opening the drain tap located in the rear of the boiler. A flexible hose must be attached to this tap to direct it to a water outlet. After draining the boiler, the valve must be closed and the flexible tube removed.

3.7 Precautions for preventing noise during operation

Ensure the flow and return pipes are not touching each other, or insulate them to prevent any vibration noise. The boiler must be correctly seated on its base and levelled. Before start-up, make sure that the boiler and the system have been properly bled.

3.8 Filling and bleeding the installation

To fill the installation, open the fill valve until the manometer shows a pressure of 1 - 1.5 bars. The circuit should be filled slowly and with the automatic air bleed valve cap loose, to let the air out of the installation. The air should also be bled from the rest of the installation using the air bleed valves provided. Close the fill valve after filling.

NOTE: Switching on the boiler with no water inside could result in serious damage.

4 COMBUSTION PRODUCT REMOVAL

The Jaka HFD Condens boilers are balanced flue oil boilers, so that the combustion products exhaustion is carried out by means of an outlet duct and an air intake from outside. It can also work by taking the air intake for the burner from the room, this is how the boilers come set from factory. To operate in this mode, the room must be sufficiently ventilated and not obstruct or block any ventilation openings.

4.1 External position of the gas evacuation pipes terminal

The installation of exhaustion of the products of combustion has to be carried out by qualified personnel staff and it will fulfill the requirements demanded in the legislation and effective regulatory schemes.

It is recommended that the position at the exhaustion duct exterior portion should be in accordance with the data of the following figures and table:

Removal pipe position	Minimum distance mm
A under a cornice	300
B between two horizontal ducts	1000
C from an adjacent window	400
D between two vertical ducts	1500
E from an adjacent ventilation grille	600
F under a balcony (*)	300
G under a window	600
H under a ventilation grille	600
I from a recess in the building	300
J from a corner of the building	300
K from the ground	2500
L from a vertical or horizontal duct or outlet (**)	300
M from a frontal surface at a distance of 3 metres from the fume outlet	2000
N as above, but with an opening	3000

(*) Providing the width of the balcony is not over 2000 mm.
(**) If the pipe is made of materials sensitive to the action of the flue gases, this distance should be over 500 mm.
Note: Spanish law also stipulates that the end of the exhaust duct must be at a distance of at least 400 mm from any air intake opening, and from the wall.

IMPORTANT: All accessories used for combustion product removal and air intake should be those supplied by DOMUSA TEKNIK.

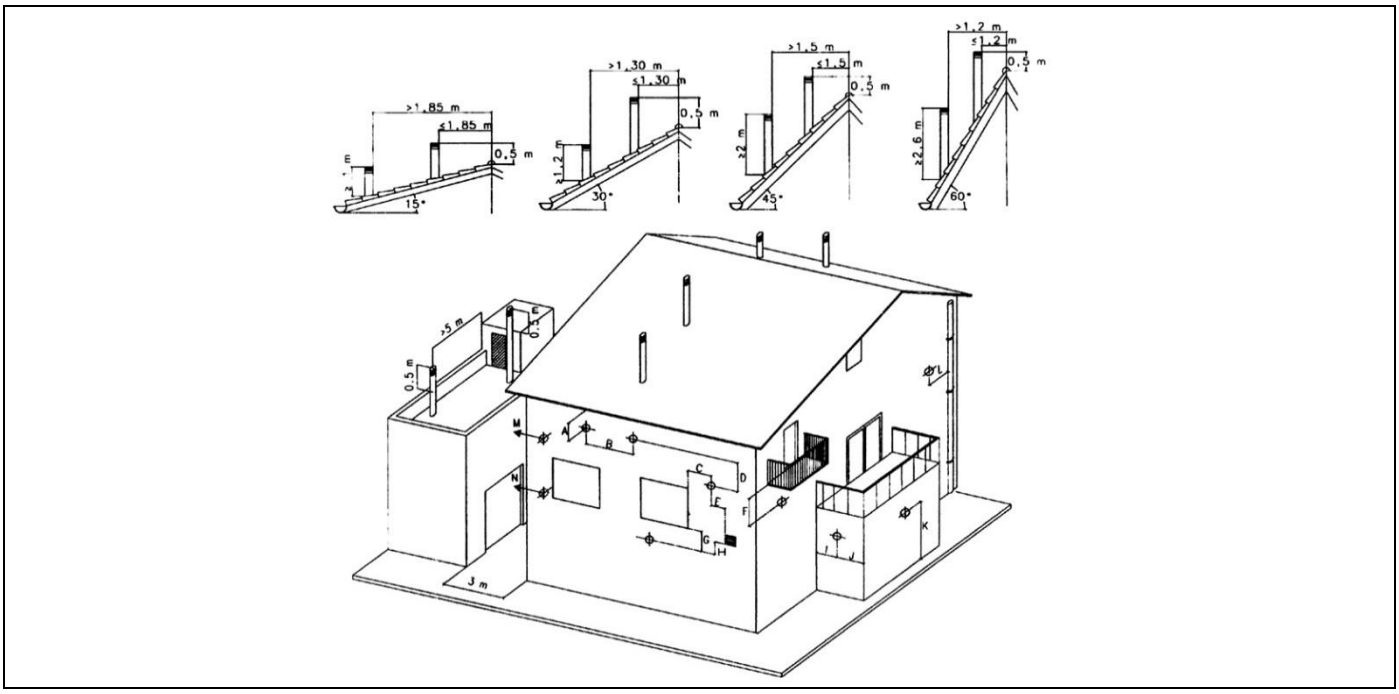

4.2 Preparation of the burner air intake for balanced flue operation mode

Jaka HFD Condens boilers come prepared from factory for operation by taking the intake air for the burner from the room.

In case of choosing room sealed mode operation, with the evacuation of the combustion gases through an outlet conduct and a independent external air intake, air intake for the burner must be prepared following these instructions:

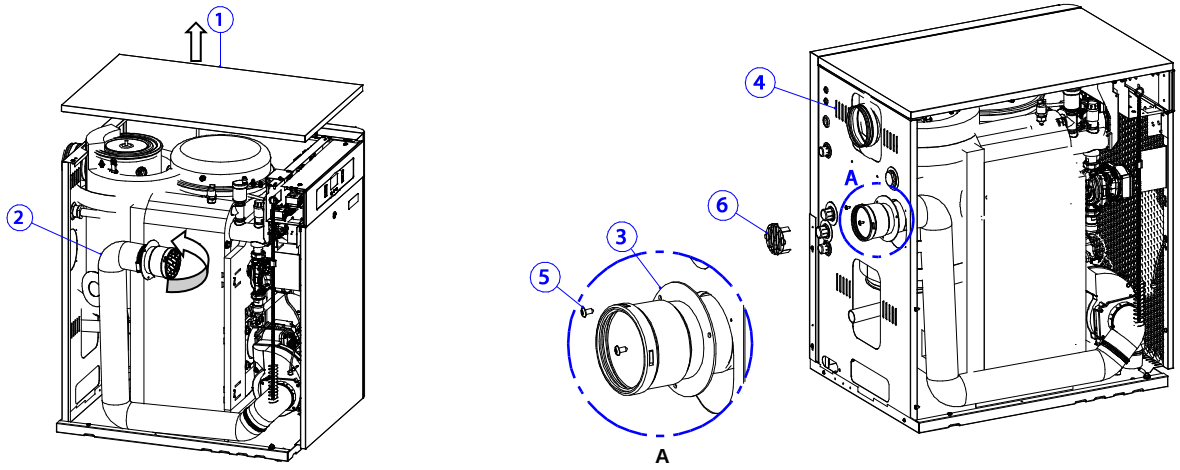

- Remove the top panel (1).
- Turn the air intake conduct (2) and take out the air intake terminal (3) por from the back (4).
- Tie air intake terminal (3) at the back (4) with two screws (5) (included in the documentation bag).
- Remove the grid (6) (this won´t be used).
- Reattach the roof (1).

4.3 ø80 / ø100 (type C_{53}) dual duct system for combustion product removal and air intake

For this type of boiler, combustion product removal and air intake take place through separate Ø80/100 mm mm ducts, using the Ø80/100 Kit, code CGAS000265. **Jaka HFD Condens** boilers come equipped with this type of extraction, by default.

15 metres is the **maximum length** of pipe that can be installed in the **Jaka HFD Condens** model, which is the maximum when adding up the metres of the air intake duct and the metres of the combustion product removal duct. For every horizontal metre, the available length is reduced by 2 metres and for every 90° bend, or two 45º bends, it is reduced by 1m.

It is recommended to fit the removal pipe in a slightly upwardly-inclined direction, at around 2º - 3º, thus preventing any water and condensation from dripping out.

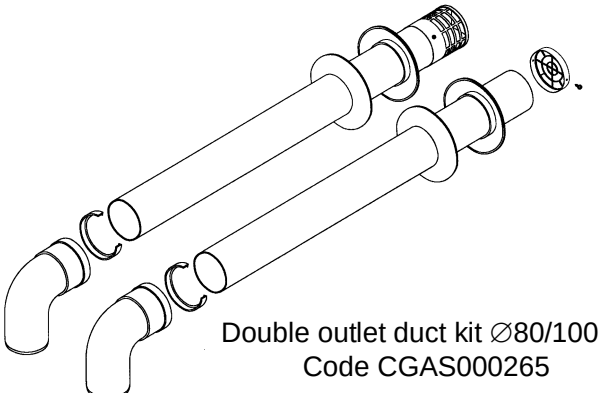

Double outlet duct kit ∅80/100
Code CGAS000265

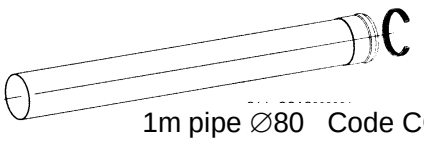

1m pipe ∅80 Code CGAS000145

1m pipe ∅100 Code CGAS000268

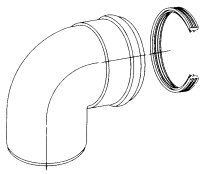

90º bend ∅80 Code CGAS000147

90º bend ∅100 Code CGAS000267

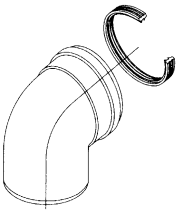

45º bend ∅80 Code CGAS000148

45º bend ∅100 Code CGAS000266

NOTE: For this configuration the pipes and elbows of ∅80 are only for the intake of air.

Examples of installation:

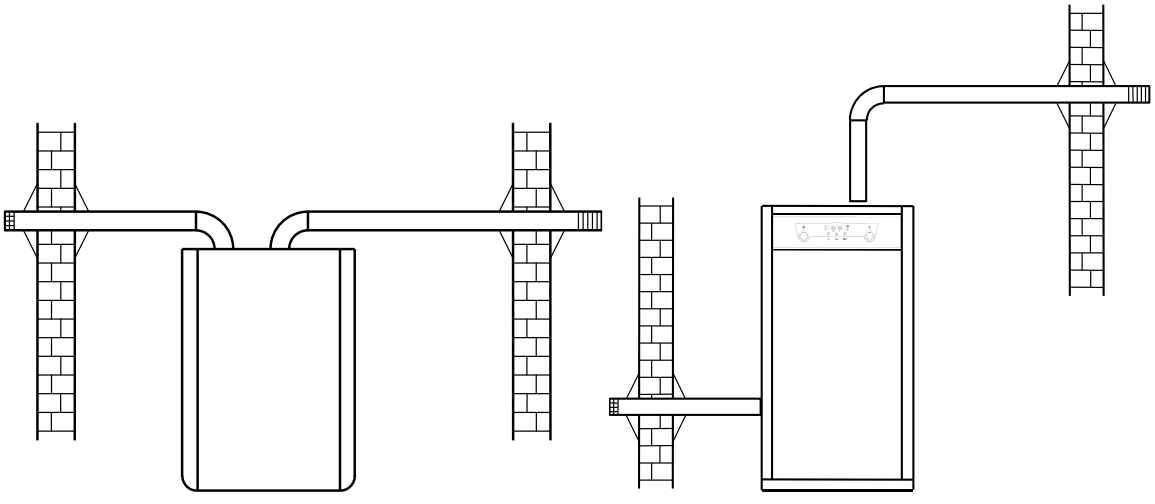

4.4 Changing from dual duct fume removal to coaxial fume removal

The **Jaka HFD Condens** boiler has a Ø80 dual duct system for combustion product removal and air intake. If you prefer the combustion products to be removed by means of a Ø80/125 coaxial tube,

you may use the Ø80/125 coaxial tube adaptor kit (supplied to order), code CGAS000213 + Code CGAS000222.

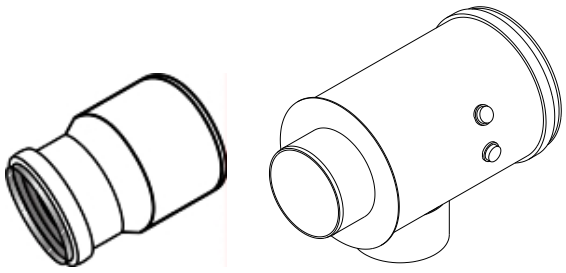

Adapter for coaxial pipe ∅80/125
Code CGAS000213 + Code CGAS000222

The changeover may be made with two different assembly configurations:

1. Output towards the back: simply remove the combustion air intake from the boiler, unscrewing the three screws holding it in place, mount the adaptor on the fume outlet towards the rear, and use the flexible air inlet tube to connect it to the adaptor T.
2. Side or top output: the procedure is the same, but for side mounting of the adaptor kit a 90º Ø80 elbow (code CGAS000147) needs to be fitted before the adaptor at the fume outlet.

The two configurations are shown in the figures below:

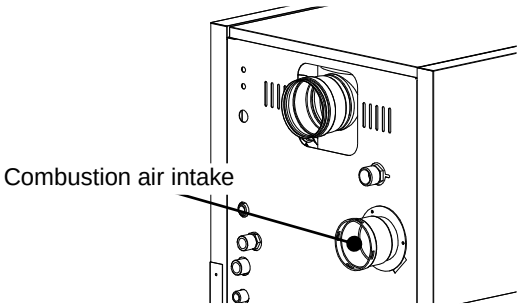

Rear outlet

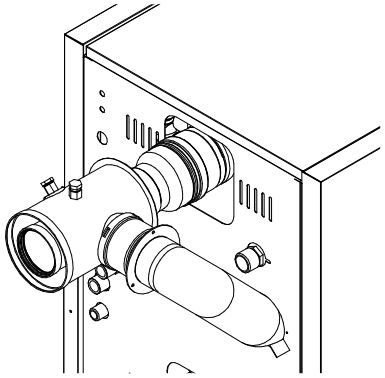

Side outlet

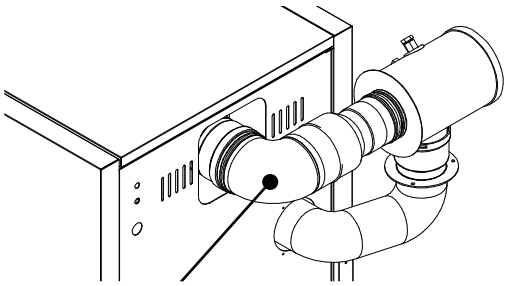

4.5 Concentric horizontal duct for combustion product removal and air intake ø80-125 (type C_{13})

Combustion product removal and air intake can be made using concentric Ø80 mm pipes for combustion product removal and Ø125 mm pipes for air intake, using the 1m Ø80-125 horizontal outlet kit, code CGAS000189.

The **maximum length** in a horizontal direction from the boiler, including the kit terminal, is 8 metres (20 HFD) and 6 metres (30 HFD). Each 90° elbow, or two 45° elbows, will reduce the available length by 1 metre.

It is recommended to fit the pipe in a slightly upwardly-inclined direction, at around 2° - 3°, to prevent any water or condensation from dripping out.

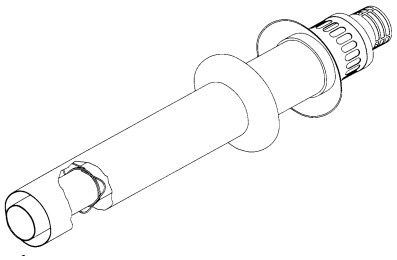

1m Horizontal duct kit ∅80/125 inox Code CGAS000189
1m Horizontal duct kit ∅80/125 PP Code CGAS000188

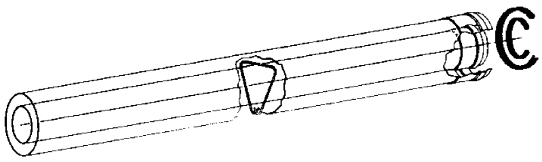

1m coaxial tube ∅80/125 inox Code CGAS000184
1m coaxial tube ∅80/125 PP Code CGAS000082

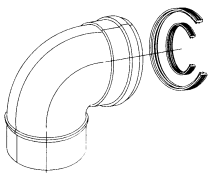

Coaxial 90° bend ∅80/125 inox
Code CGAS000182
Coaxial 90° bend ∅80/125 PP
Code CGAS000080

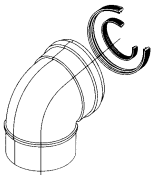

Coaxial 45° bend ∅80/125 inox
Code CGAS000183
Coaxial 45° bend ∅80/125 PP
Code CGAS000081

Examples of installation:

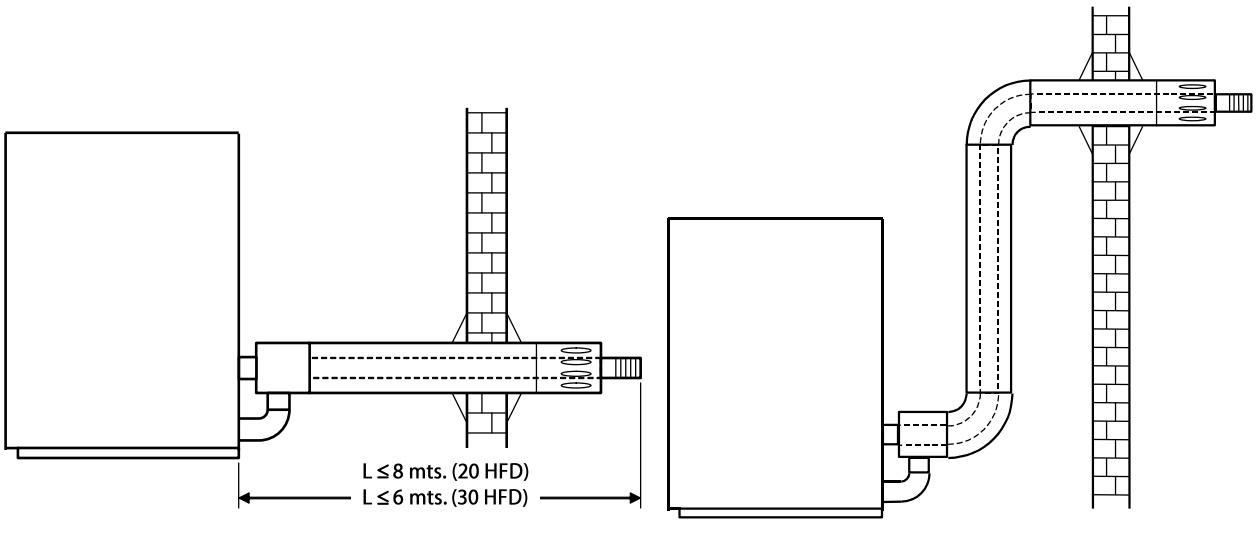

4.6 Concentric vertical duct for combustion product removal and air intake ø80-125 (type C_{33})

The evacuation of the combustion products and the air intake may be accomplished by using Ø80 mm concentric tubes for the evacuation of combustion products and Ø125 mm for the air intake, using the vertical output Ø80-125 Kit, code CGAS000181.

The **maximum length** in a vertical direction from the boiler, including the kit terminal, is 10 metres (20 HFD) and 7 metres (30 HFD). Each 90° elbow, or two 45° elbows, will reduce the available length by 1 metre.

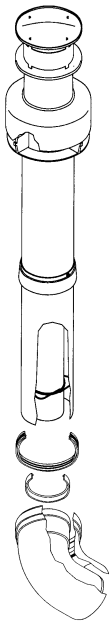

Vertical duct kit ∅80/125
inox Code. CGAS000181
Vertical duct kit ∅80/125
PP Code. CGAS000360

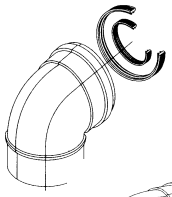

45ºbend ∅80/125 inox Code. CGAS000183
45ºbend ∅80/125 PP Code. CGAS000081

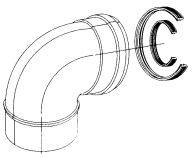

90º bend ∅80/125 inox Code CGAS000182
90º bend ∅80/125 PP Code CGAS000080



1m coaxial tube ∅80/125
inox Code CGAS000184
1m coaxial tube ∅80/125
PP Code CGAS000082

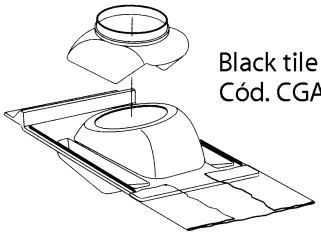

Black tile ∅80/125
Cód. CGAS000075

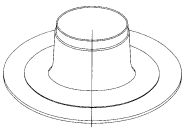

Black tile ∅80/125
Cód. CGAS000074

Examples of installation:

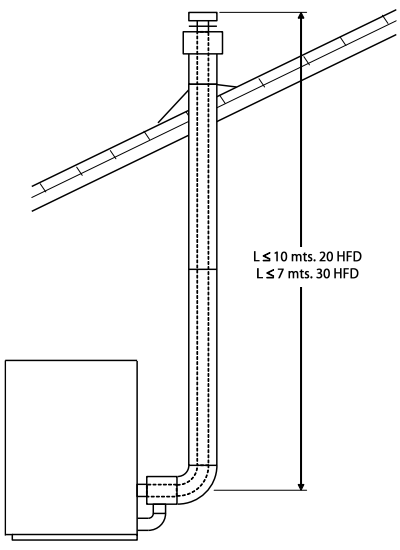

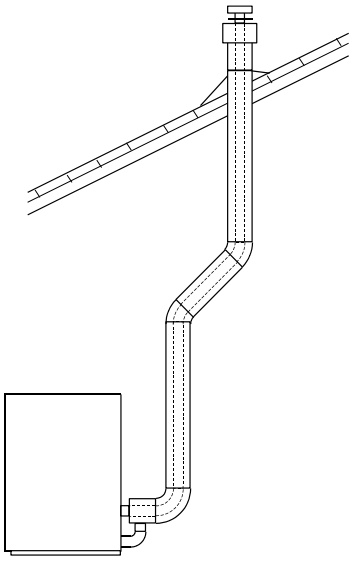

5 OPERATION

5.1 Boiler functioning

Set the control thermostat and the room thermostat (if applicable) to the desired temperature. Move the main switch to the *"I"* position and the summer-winter switch to the Winter position "❄". The burner and the pump will begin to function until the installation reaches the pre-selected temperature of the control thermostat (or the room thermostat, if the unit has one). When the temperature in the installation drops, the burner will start up again, running the heating cycle.

5.2 Operating with a Sanit hot water tank (optional)

The **Jaka HFD Condens** boiler may be installed together with a hot water tank from the **DOMUSA TEKNIK Sanit** range, to obtain domestic hot water. For correct hydraulic installation, carefully follow the assembly and connection instructions enclosed with the hot water tank.

The boiler is provided with a switch to select summer position or winter position. Using this switch we may choose:

- **Summer Position** ☼: in this position, the boiler only attends to the needs of DHW production, lighting the burner and the hot water tank loading pump (summer pump) until the accumulated DHW temperature reaches the regulated temperature in the thermostat of the hot water tank. When the DHW temperature is reached, the burner and the summer pump will stop.

- Winter Position ❄: in this position, the boiler attends to the needs of DHW and the heating system, giving priority to DHW.

6 SAFETY CUT-OUTS

The boiler has three types of safety cut-outs:

6.1 Excessive temperature safety cut-outs (Thermostat T_S)

This cut-out is indicated by the pilot light for blocking due to temperature. This occurs when the boiler exceeds a temperature of 110ºC. To restart, press the button on the safety thermostat after first removing the button cover.

6.2 Excessive fume temperature safety cut-out (Thermostat T_H)

This cut-out is indicated by the pilot light for blocking due to temperature. This occurs whenever the temperature of the fumes exceeds 110ºC. To restart, press the button on the safety thermostat after first removing the button cover.

6.3 Burner cut-out

This cut-out is indicated by the pilot light for blocking of the burner. This occurs as a result of an anomaly in the burner or in the fuel installation. To unblock it, press the illuminated button that lights up on the burner.

NOTE: If any of these cut-outs occur repeatedly, call your nearest official Technical Assistance Service.

7 CLIMATE CONTROL (OPTIONAL) :

The **Jaka HFD Condens** boiler comes prepared for the installation of a **Lago BVS** climate control system.

B: Action on burner.

V: Action on mixing valve.

S: Action on domestic water.

The operating instructions and electrical connections are found in the packaging of the boiler.

8 SHUTTING DOWN THE BOILER

To stop the boiler, simply turn the master switch to "O".

To stop the central heating mode and leave only the DHW mode running, set the general switch to the summer position "☼".

9 START-UP

Before beginning the start-up process of the boiler, check that:

- The boiler is connected to the mains.
- The installation has been filled with water (the manometer should indicate a pressure of 1 - 5 bar).
- The fuel reaches the burner.
- The isolation valves are open, if there are any installed.
- The room thermostat is set to the desired temperature.
- The boiler room has effective and free ventilation (ventilation based on 0.5 dm^2 minimum).

To start-up the boiler, position the main switch and the room thermostat to the desired temperature.

10 FIRST START-UP

For the guarantee to be valid, the boiler must be started up for the first time by an official DOMUSA TEKNIK Technical Assistance Service. Before beginning the start-up process, the following must be complied with:

- The boiler must be connected to the mains.
- The installation must have been filled with water (the manometer should indicate a pressure of 1 - 5 bar).
- The fuel must be reaching the burner at a pressure of no more than 0.5 bar.

11 DELIVERY OF THE SYSTEM

After the initial start-up, the Technical Assistance Service will explain to the user how the boiler functions, making any observations they consider relevant.

The installer is responsible for clearly explaining to the user the functioning of any control or regulation device forming part of the installation but not supplied with the boiler.

12 BOILER MAINTENANCE

To maintain the boiler in perfect working order, a yearly service should be performed by personnel authorised by DOMUSA TEKNIK.

12.1 Cleaning the boiler

To maintain the boiler in optimal operating conditions it is recommended that an annual cleaning be undertaken of the combustion chamber, the fume outlets and the condenser. A cleaning brush of a suitable size for cleaning the inside of the exhaust ducts is supplied with the boiler for this purpose. This brush is located at the rear of the boiler, beside the condenser.

The combustion chamber and exhaust ducts should not be cleaned using chemical products or hard steel brushes. After any cleaning operation has been carried out, it is important to run several ignition cycles to check all the elements are functioning correctly.

For correct cleaning, the following recommendations should be carefully observed:

Cleaning the boiler body

- Open and remove the outer door of the boiler.
- Remove the burner by unscrewing the fixing nut on the top of the burner.
- Remove the combustion chamber door and the exhaust duct cover, unscrewing the six fixing nuts around them.
- Clean the exhaust ducts on the cast body, using the cleaning brush supplied with the boiler.
- Clean the boiler combustion chamber. We recommend using a soft brush for scrubbing the combustion chamber surfaces, and a blower to remove the flakes.
- After cleaning, replace the combustion chamber door, the exhaust duct cover, the burner and the outer door of the boiler.

Cleaning the condenser

- Open and remove the top cover of the boiler to access the condenser on the rear of the boiler body.
- Open the top cover of the condenser to access its exhaust ducts. To open this cover, release the two side closures, turn the locking plate anti-clockwise and pull the cover upwards to remove it.
- Remove the exhaust deflectors inside the exhaust outlets.
- Clean the exhaust ducts using the cleaning brush supplied with the boiler. Any scale will fall through the condensation drain and onto the lower condenser cover. It is advisable to pour water into the top of the condenser for a more effective cleaning. This water will be automatically discharged through the condensation drain.
- To clean the outer part of the condenser cylinder, remove the three screws and then remove the metal ring. Take out the seal and use the brush to clean it. Next, put the components back in place again and replace and tighten the three screws and the metal ring.
- If the lower condenser cover needs cleaning, remove the side cover of the boiler to access it. Firstly remove the bracket holding it in place and pull on it to open it. Then pull the lower cover down to open and clean it.

- After cleaning, replace the fume deflectors, the top condenser cover and the top outer cover of the boiler. Then put the cleaning brush back inside the boiler.
- The condensation siphon should be cleaned once a year. To do this, remove it and wash it in soapy water. Replace the siphon after cleaning.

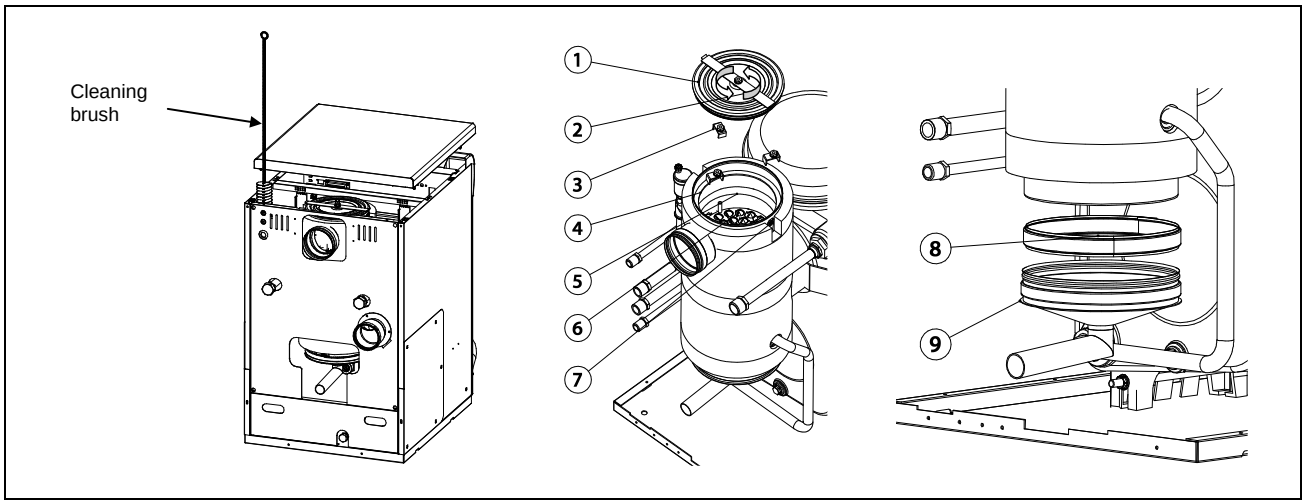

12.2 Boiler water characteristics

In areas with water hardness over 25-30ºF, treated water must be used in the heating installation to avoid any lime scale deposits on the boiler. It should be noted that even a few millimetres of scale will greatly reduce the boiler's heat conductivity, causing a major drop in performance.

Treated water must be used in the heating circuit in the following cases:

- Very large circuits (containing a large amount of water).
- Frequent filling of the installation.

If repeated partial or total draining of the installation is necessary, we recommend filling it with treated water.

12.3 Condensate drain-off

The drain for boiler condensate must not be altered and must be kept clear of obstructions. Annual maintenance of the condensate trap is recommended to avoid obstructions that hinder the discharge.

If a neutralisation system is installed in the condensate drain, it is essential to conduct annual maintenance of the system, following the instructions of the manufacturer of the neutralisation system.

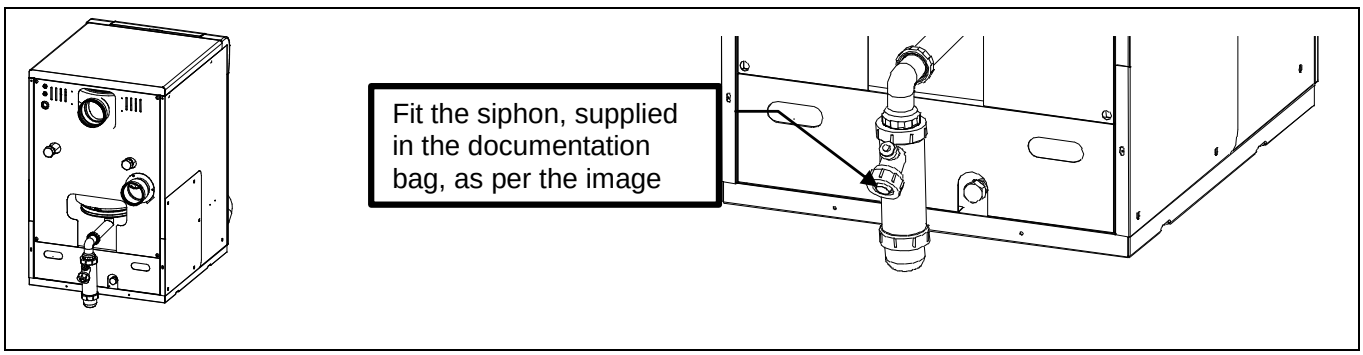

13 TECHNICAL CHARACTERISTICS

JAKA HFD CONDENS			20 HFD	30 HFD
Boiler type	-		condensing	
			Heating only	
Rated heat output	P_{rated}	kW	19	30
Useful heat output	P_4	kW	19.0	28.7
Useful heat output (30%)	P_1	kW	6.1	8.5
Seasonal energy efficiency of heating	η_S	%	90	91
Useful efficiency	η_4	% (PCI)	96.55	97.96
		% (PCS)	91.04	92.38
Useful efficiency (30%)	η_1	% (PCI)	103.82	103.45
		% (PCS)	97.90	97.55
Auxiliary electricity consumption at full load	el_{max}	kW	0.226	
Auxiliary electricity consumption at part load	el_{min}	kW	0.078	
Auxiliary electricity consumption in standby mode	PSB	kW	0.001	
Heat loss in standby mode	P_{stby}	kW	0.127	0.135
Emissions of nitrogen oxides	NOx	mg/kWh	86	84
Heating temperature regulation	°C		60 - 85	
Maximum safety temperature	°C		110	
Maximum operating pressure of heating	bar		3	
Heating expansion vessel capacity	Lts		8	8
Heating water volume	Lts		14	19.2
Water pressure drop	mbar		96	163
Fume temperature	°C		69	67
Volume on fume side	m^3		0.094	0.114
Maximum fume flow	Kg/s		0.0085	0.0132
Pressure drop of the fumes	mbar		0.20	0.20
Combustion chamber length	mm		220	300
Combustion chamber type	-		wet + three exhaust ducts	
Type of burner adjustment	-		ON/OFF	
Electrical supply	-		~220-230 V - 50 Hz - 200 W	
Gross weight	Kg		122	155

14 ELECTRICAL DIAGRAM

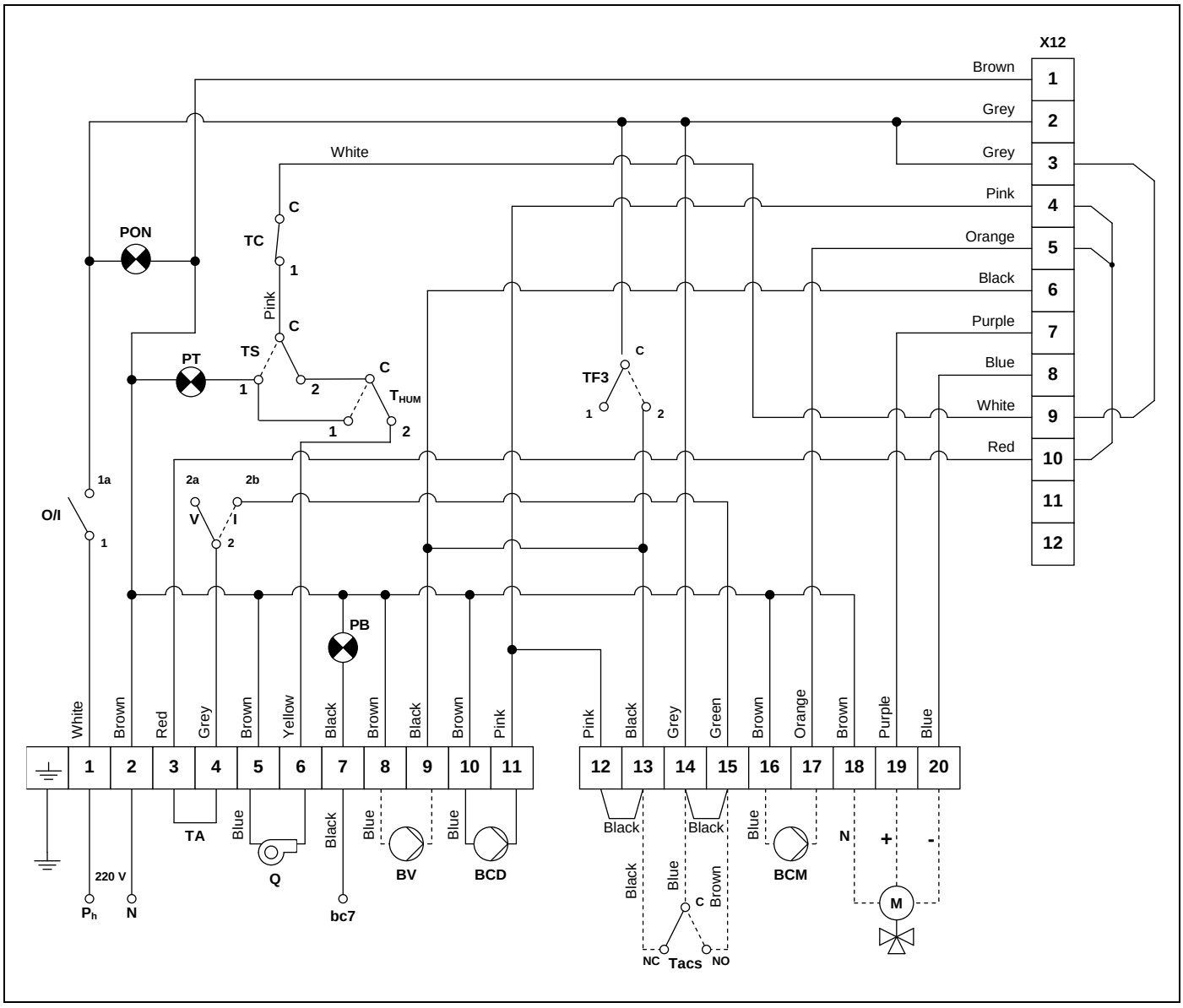

B: Burner.
BV: Summer pump.
BCM: Mixed circuit pump.
BCD: Direct circuit pump
M: Motor valve.
O/I: Main on/off switch.
V/I: Summer-Winter switch
TA: Air thermostat.
TC: Control thermostat (in boiler).
T_{HUM}: Fume safety thermostat
TS: Safety thermostat (in boiler).
TF3: 93º Anti-inertia thermostat (in boiler).
Tacs: DHW thermostat.
PON: "ON" pilot light.
PB: Burner blocked pilot light.
PT: Temp blocking pilot light.
X12: 12 pole connector for climate control (optional).
bc7: Terminal no.7 burner control.

15 DIAGRAMS AND MEASUREMENTS

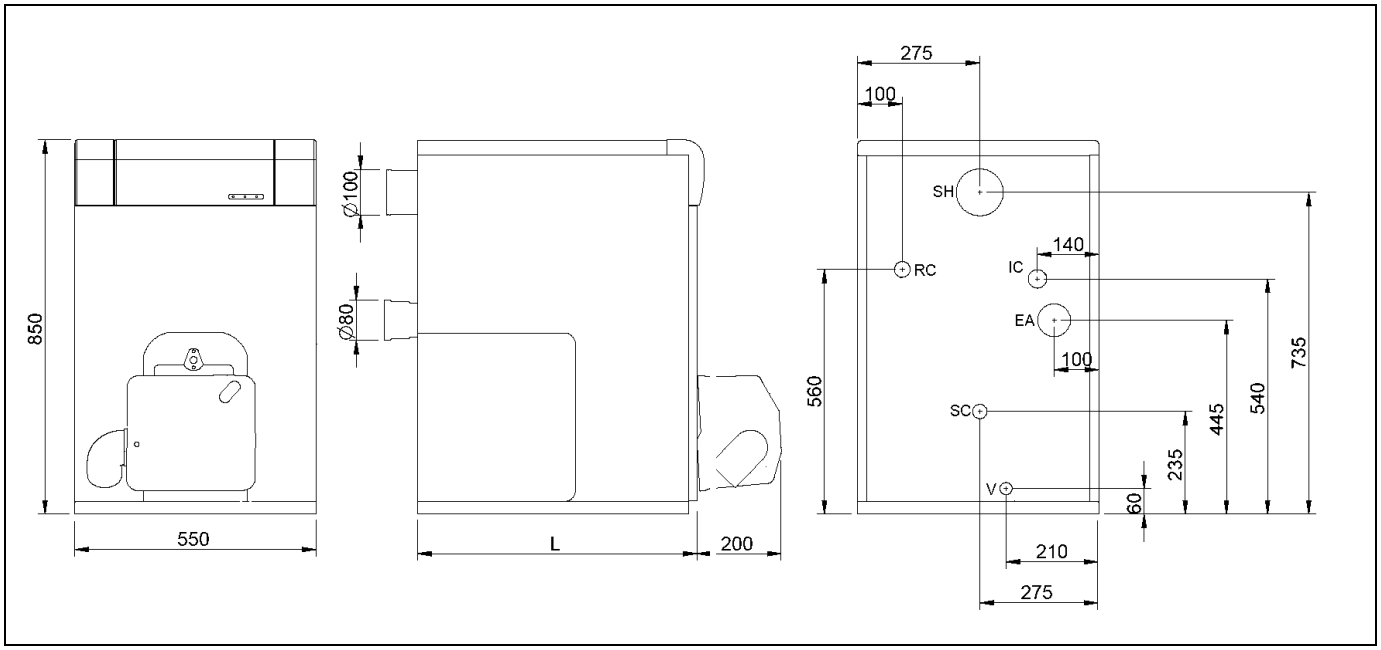

IC: Heating flow.
RC: Heating Return.
V: Drain valve
SH: Fume exhaust duct, Ø100.
SC: Condensate outlet, 1" H.
EA: Combustion air intake, Ø80.

MODEL	DC, RC	L
JAKA 20 HFD CONDENS	3/4″M	540
JAKA 30 HFD CONDENS	1″M	640

16 BURNER

16.1 Assembly

Secure the burner support to the boiler. then fix the burner to the support. This will allow the correct tilt of the flame tube towards the combustion chamber. Fit the intake and return pipes.

16.2 Burner start-up

First place a manometer and a vacuum gauge and prepare the combustion analyser.

The "Domestic" burner is equipped with a self-priming pump, which allows the aspiration of fuel from a tank installed at a lower level than the burner, as long as the vacuum measured with the vacuum gauge in the pump does not exceed 0,4 bat (30cmHg).

The suction of fuel must never reach the bottom of the tank, always leaving a minimum distance of 10 cm to the bottom, if possible, the suction kit with float is recommended.

In installations that allow it, the fuel returns must be made to a recirculation filter with air purge, thus avoiding oxidations in the diesel pump.

Make sure there is fuel in the tank, that the oil valves are open and that voltage is reaching the burner. Turn on the master switch. Unscrew the air bleed screw (manometer point). Then, when the valve opens, remove the photocell sensor and move it towards a light source until the oil comes out. Disconnect the burner and screw the bleed screw back in.

16.3 Adjusting the combustion conditions

As each particular installation has a different combustion circuit, it is essential to adjust the combustion conditions of each boiler. In order for the guarantee to be valid, the burner must be adjusted by an official DOMUSA TEKNIK Technical Assistance Service.

Observe the flame. If there is insufficient combustion air, it will be dark in colour and will produce smoke, rapidly obstructing the flue outlet.

On the contrary, if there is an excess of combustion air, the flame will be whitish or bluish-white in colour. This will reduce the performance of the boiler and it will fail to comply with anti-pollution standards, and the excess air may also hinder the ignition process.

The flame should be orange in colour.

If the shape of the boiler makes it difficult or impossible to observe the flame, the combustion air flow can be regulated by observing the smoke coming out of the flue. If the smoke is dark in colour, more air will need to be provided to the burner, or if it is a very whitish colour, the air in the burner will need to be decreased until no smoke at all is observed.

If you have a device for determining the composition of the combustion gases, this will be the best guide for flame adjustment. If not, simply follow the above indications.

To adjust the air and burner line conditions, carefully follow the instructions given below.

16.4 Primary air adjustment

To adjust the primary combustion air, turn the screw using a 6 mm. Allen key, as shown in the diagram. Turn it clockwise to increase the airflow, and anticlockwise to decrease it.

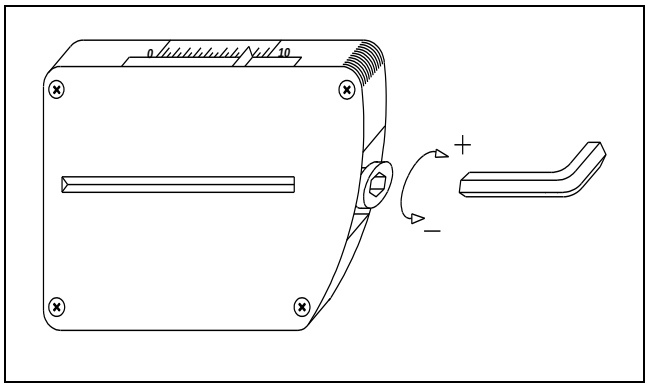

16.5 Combustion line adjustment

To adjust the combustion line, loosen the combustion line blocking screw "**BL**". Turn the line regulator "**RL**" clockwise to increase the airflow and anticlockwise to decrease it. After adjustment, tighten the combustion line blocking screw "**BL**".

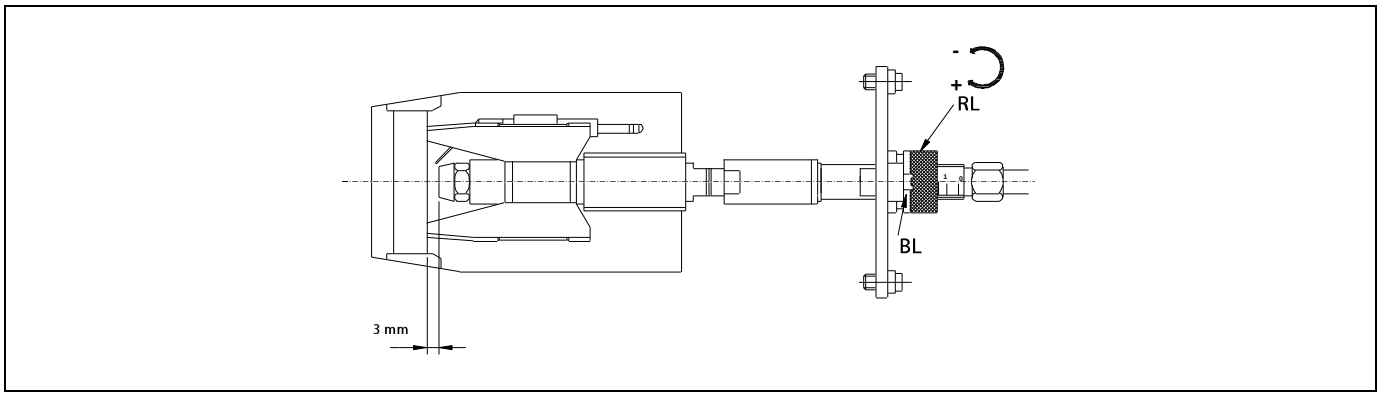

16.6 Correct position of electrodes

To ensure correct ignition of the "**Domestic**" burner, the measurements shown in the diagram must be observed. Also ensure the electrode fixing screws have been screwed in place before replacing the flame tube.

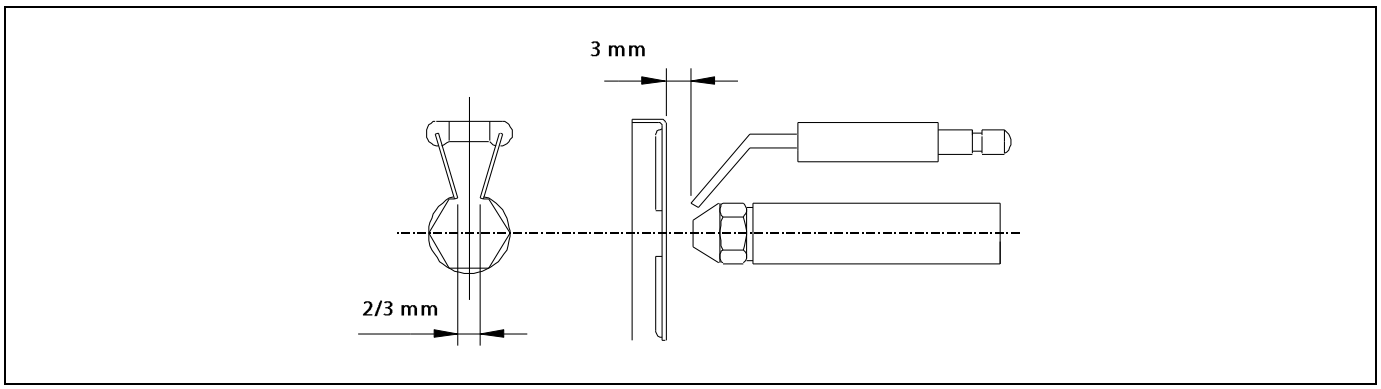

16.7 Oil pressure adjustment

To adjust the oil pump pressure, turn the screw ***(1)*** clockwise to increase the pressure, and anticlockwise to decrease it.

1 - Pressure adjustment.

2 – Vacuum gauge point.

3 - Valve.

4 - Manometer point.

5 - Nozzle outlet.

6 - Return.

7 - Intake.

SUNTEC - MOD. AS47C

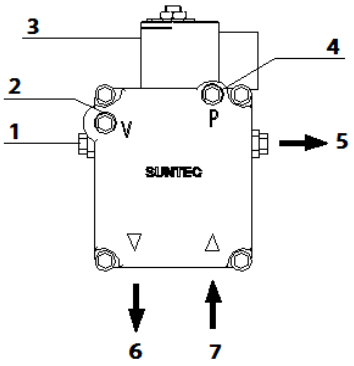

DANFOSS - MOD. BFP 21 L3

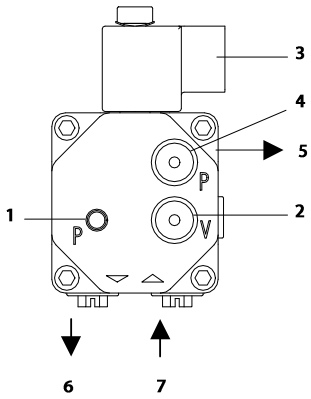

16.8 Oil supply piping diagrams

The diagrams and tables below correspond to installations without reductions and with a perfect hydraulic seal. It is recommended to use copper pipes. A pressure drop of 0.4 bar (30 cmHg) must not be exceeded (reading via a vacuum gauge).

Intake installation

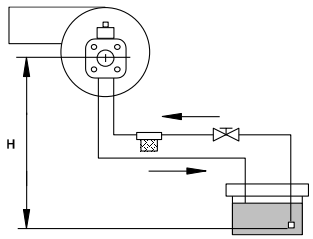

Charging installation

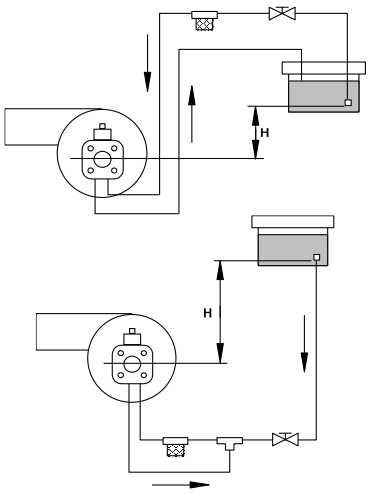

Intake installation		
H (m)	Pipe length	
	Øint 8 mm.	Øint 10 mm.
0.0	25	60
0.5	21	50
1.0	18	44
1.5	15	38
2.0	12	26
2.5	10	26
3.0	8	20
3.5	6	16

Charging installation		
H (m)	Pipe length	
	Øint 8 mm.	Øint 10 mm.
0.5	10	20
1.0	20	40
1.5	40	80
2.0	60	100

16.9 Technical specifications

MODEL	JAKA 20 HFD CONDENS	JAKA 30 HFD CONDENS
Consumption max. Kg/h.	1,6	2,5
Power kW.	19	30
Motor power	200 W	
Functioning type	Todo o nada	
Power supply	220 V - 50 Hz	

16.10 Recommended nozzle and pump pressure

Jaka HFD Condens boilers are supplied with the burner fitted, with their corresponding nozzle and with the standard pre-adjustment. The following table shows the nozzles and adjustments for each particular model:

MODEL	Nozzle	Burner pressure (bar)	Air adjustment	Line adjustment
JAKA 20 HFD CONDENS	0.40/ 80º H	15	6,5	1
JAKA 30 HFD CONDENS	0.60/ 60º H	11	4.5	1

16.11 Electrical connection diagram

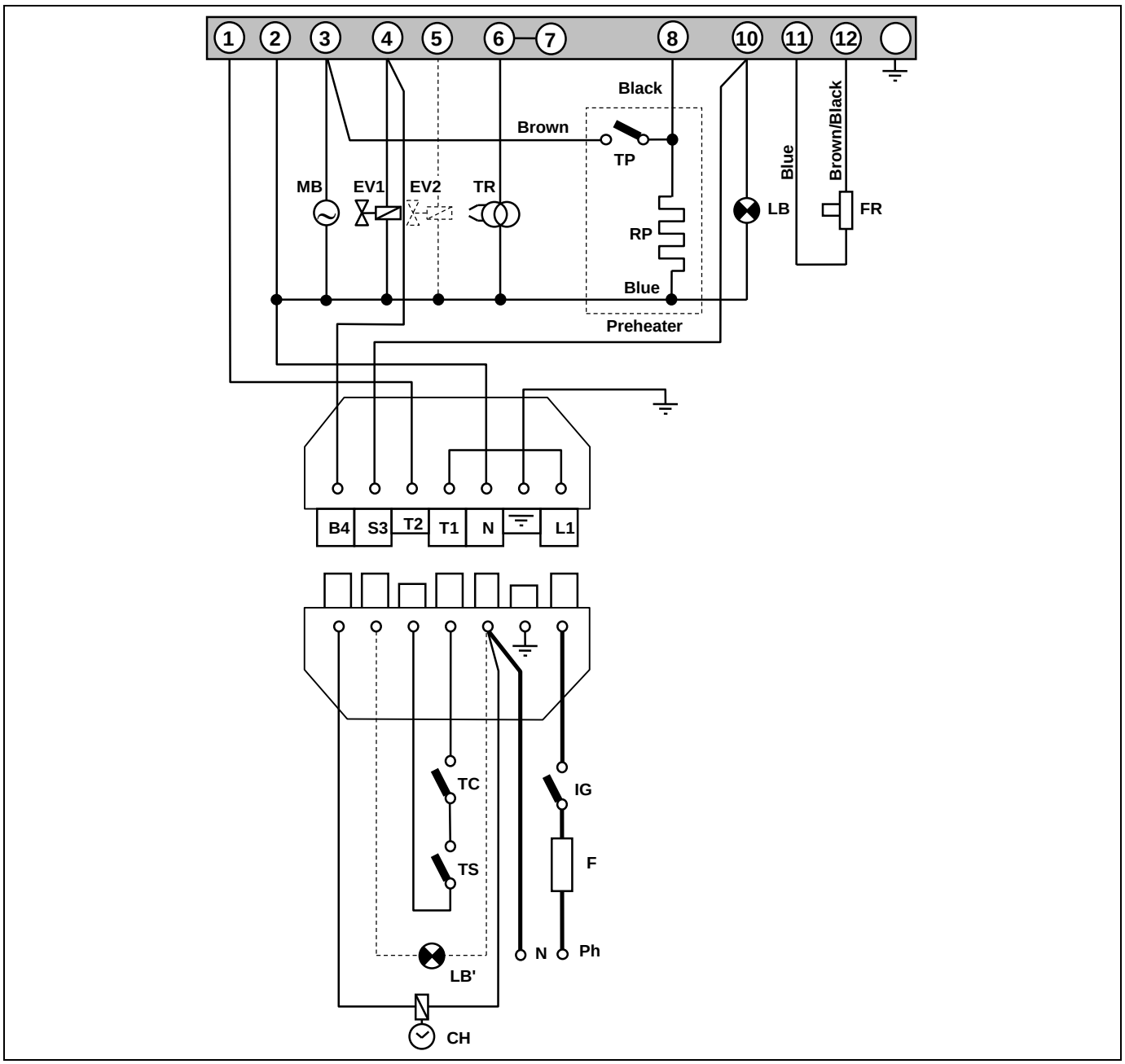

B4: Hour meter contact.
S3: Cut-out pilot light contact:
TC: Control thermostat (in boiler).
TS: Safety thermostat (in boiler).
CH: Hour meter.
IG: Main on/off switch.
F: Fuse.
LB: Pilot light.
LB': External cut-out pilot light.

FR: Photocell.
TR: Transformer.
MB: Motor pump.
EV: Valve.
RP: Preheater element.
Ph: Phase.
N: Neutral.
TP : Preheater thermostat.

16.12 Quick connector

To connect and disconnect the red oil intake tube to the nozzle, proceed as follows:

- Press the connector ring in the direction of the arrow, pulling on the red tube at the same time.

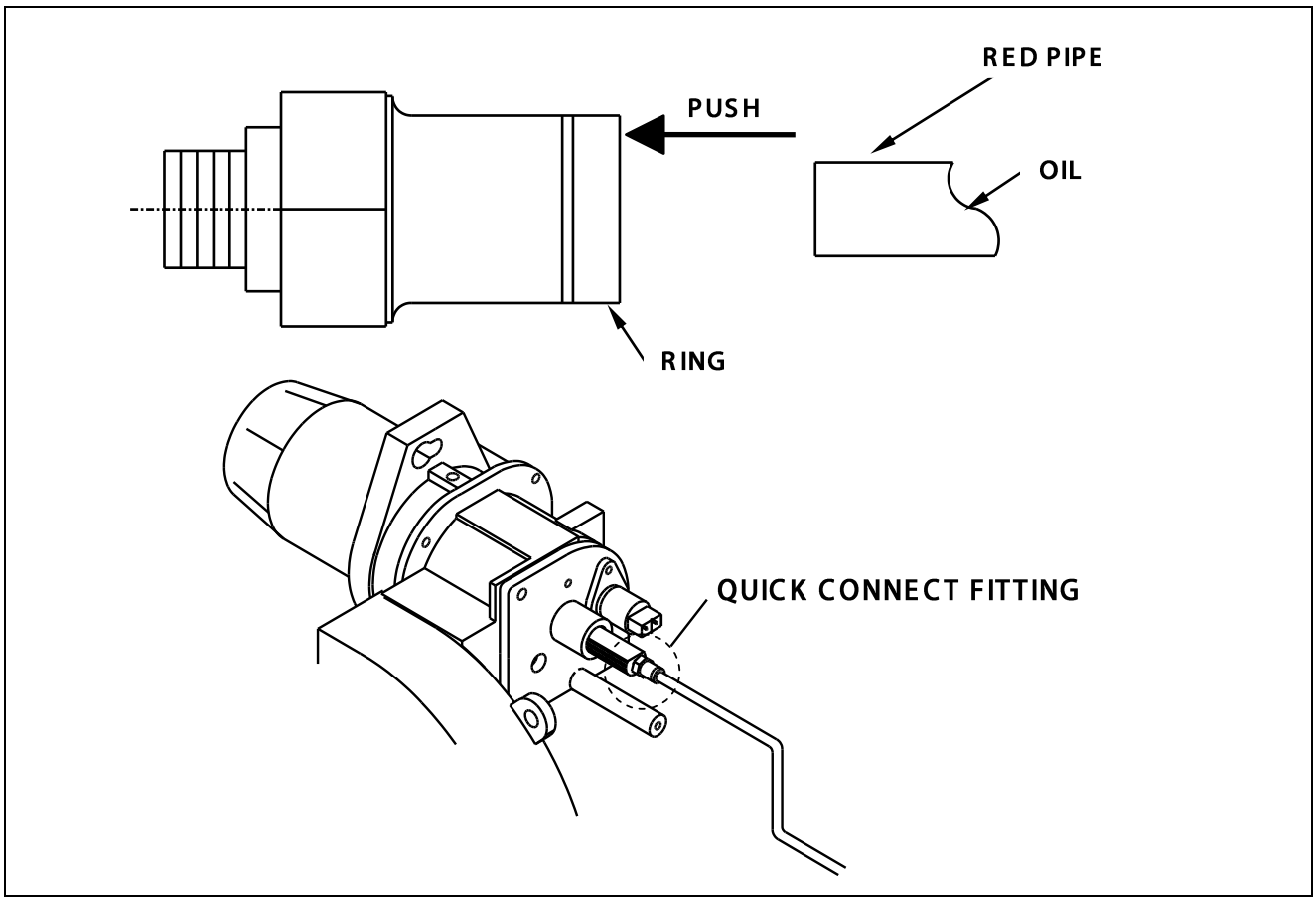

16.13 Burner control operating sequence

The burner's LMO14 control box has a reset button "EK", which is the key element for resetting the burner control and activating/deactivating the diagnostic functions.
The multi-colour LED on the reset button is the indicator for visual diagnosis. The "EK" button and the LED are located under the transparent cover of the reset button. During normal functioning, the various operating statuses are indicated in the form of colour codes (see the colour code table below). During ignition, the indication is as shown in the following table:

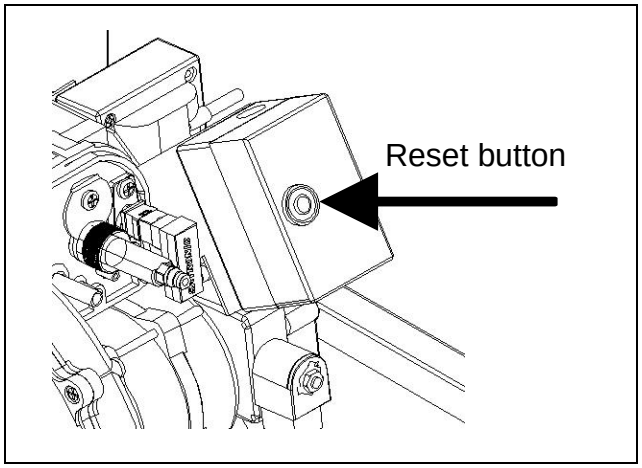

If the button is on, press to reset.
If the button stays on, call the Technical Assistance Service.

Colour code table for multi-colour indicator lights (LEDs)		
Status	**Colour code**	**Colour**
Wait time "tw", other standby statuses	○	Off
Fuel pre-heater on	●	Yellow
Ignition phase, controlled ignition	● ○ ● ○ ● ○ ● ○ ● ○ ●	Flashing yellow
Functioning, flame OK	□	Green
Functioning, flame not OK	□ ○ □ ○ □ ○ □ ○ □ ○	Flashing green
External light during burner ignition	□ ▲ □ ▲ □ ▲ □ ▲ □ ▲	Red/green
Undervoltage	● ▲ ● ▲ ● ▲ ● ▲ ●	Yellow/red
Failure, alarm	▲	Red
Error code output (see "Error code table")	▲○ ▲○ ▲○ ▲○ ▲○	Flashing red
Interface diagnosis	▲ ▲ ▲ ▲ ▲ ▲ ▲ ▲	Flashing red light

..... Steady light
○ Off
▲ Red
● Yellow
□ Green

. Troubleshooting

This section provides a list of the most common burner and boiler failures.

16.14 Burner error code

We have already mentioned that the burner is equipped with a cut-out system, indicated by the reset button light. It may cut out accidentally, and in this case the steady red light on this button will come on. You may unblock it by pressing the button for approx. 1 second. When the burner is blocked and the steady red light is on, visual failure diagnosis may be activated, in accordance with the error code table. To enter visual failure diagnosis mode, hold down the reset button for at least three seconds.

Error code table		
Red flashing LED code	**"AL" on term. 10**	**Possible cause**
Flashes 4 times	On	No flame established when ignition safety time ends. - Fuel valves defective or dirty - Flame detector defective or dirty - Burner maladjustment, no fuel - Ignition unit defective
Flashes 4 times	On	External light during burner ignition
Flashes 7 times	On	Excessive flame loss during functioning (limited number of repetitions) - Fuel valves defective or dirty - Flame detector defective or dirty - Burner maladjustment
Flashes 8 times	On	Supervision of fuel pre-heater time
Flashes 10 times	On	Cabling fault or internal failure, output contacts, other failures

During the failure diagnosis time, the control outputs are disabled and the burner remains off.
To exit failure diagnosis and activate the burner again, reset the burner control. Hold down the reset button for approx. 1 second (<3 s).

16.15 Boiler failures

FAILURE	CAUSE	SOLUTION
RADIATOR DOES NOT HEAT UP	- The pump is not turning - Air in hydraulic circuit	Unblock the pump Drain the installation and the boiler (the automatic air bleed valve cap must always be loose)
EXCESSIVE NOISE	- Burner badly adjusted - Flue not correctly sealed - Flame unstable - Flue not insulated	Correctly adjust it Eliminate any leaks Examine the burner Suitably insulate it

16.16 Thermostat

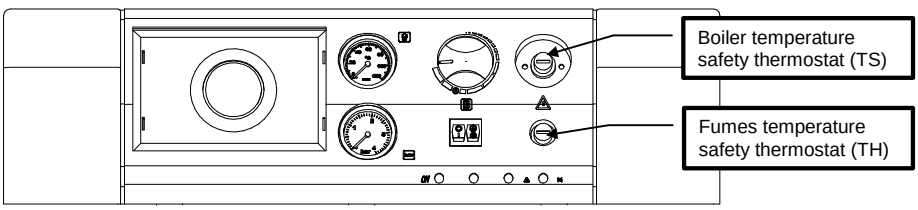

If the boiler goes into safety lockout due to overheating of the boiler (TS) or fumes (TH), reset by pressing the appropriate button on the thermostat. To access the buttons, unscrew the black cap.

17 SPARES LIST

17.1 Burner

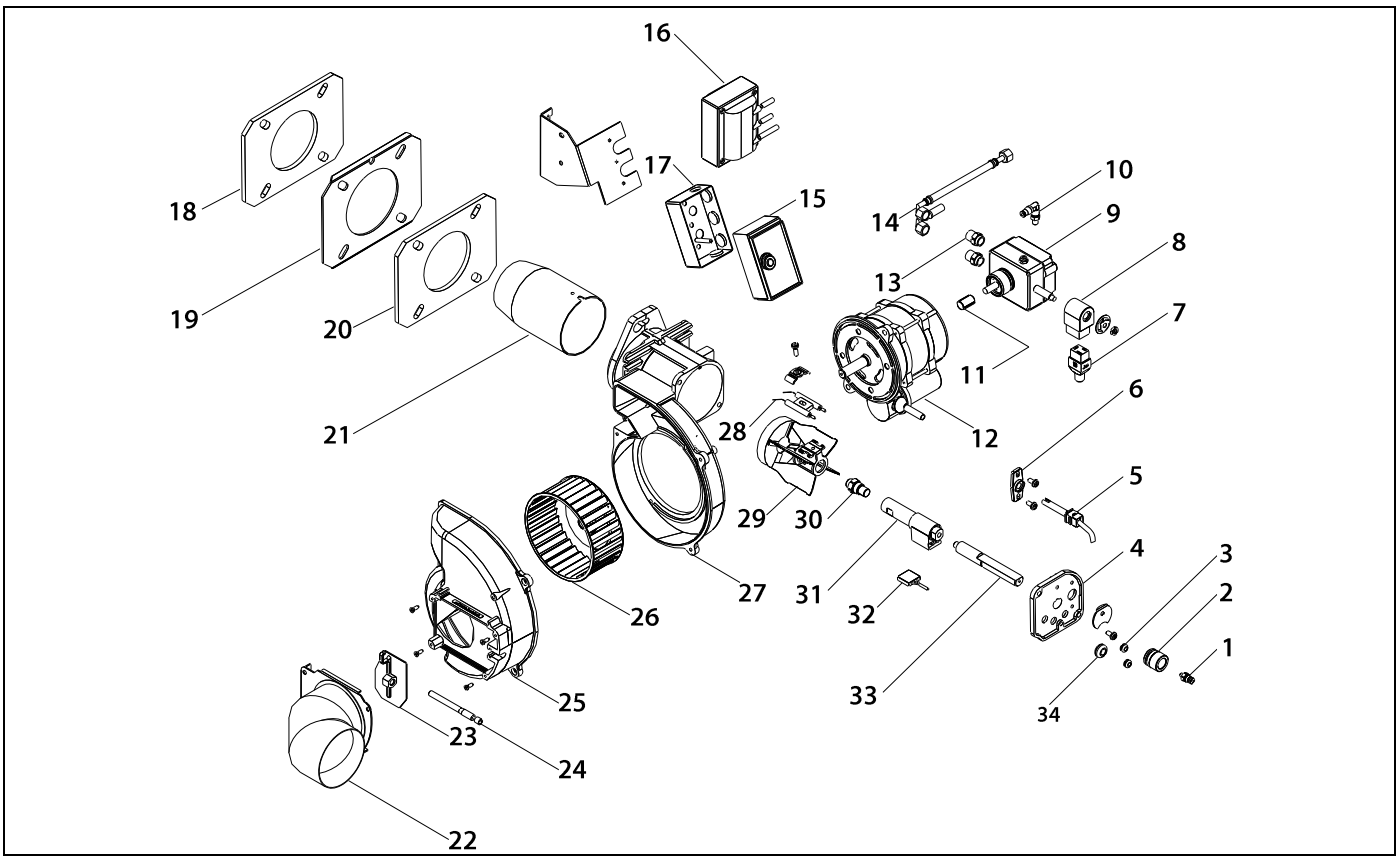

Pos.	Code	Description
1	CTOR000006	Straight connector
2	CTOE000054	Line adjustment nut
3	CFER000032	Cable duct
4	CEXT000720	D4 end cover
5	SOPE000241	Siemens Photocell
6	CQUE000223	Photocell support
7	CQUE000054	Suntec valve coil cable
	CQUE000124	Danfoss valve coil cable
8	CQUE000089	Danfoss valve coil
9	CQUE000062	Suntec oil pump
	CQUE000088	Danfoss oil pump
10	CTOR000007	Elbow connector
11	CQUE000004	Pump motor coupling
12	CQUE000102	Motor
13	CTOE000065	Counter thread
14	CQUE000147	Oil hose
15	CQUE000169	LMO14 Control box
16	CQUE000005	Transformer
17	CQUE000129	LMO14 Control box base

Pos.	Code	Description
18	CQUE000033	Flange seal
19	SATQUE0001	Flange
20	CQUE000158	Flange support
21	SCON0001667	Canon Jaka FD 20 Condens
	CQUE000198	Canon Jaka FD 30 Condens
22	CQUE000018	Manifold
23	CQUE000151	D4 air regulating plate
24	CTOE000064	Air adjustment screw
25	CEXT000719	Air adjustment support
26	CQUE000044	Fan
27	CEXT000718	Motor support
28	CQUE000019	Set of electrodes
29	CQUE000155	Turbulator disc
30	CQUE000172	Nozzle OD-H 0.40-80º(Jaka FD 20 Cond.)
	CQUE000203	Nozzle OD-H 0.60-60º(Jaka FD 30 Cond.)
31	CQUE000061	Preheater
32	CQUE000027	Pre-heater cable
33	CTOE000063	D4 burner line
34	CFER000033	Cable duct

17.2 BOILER

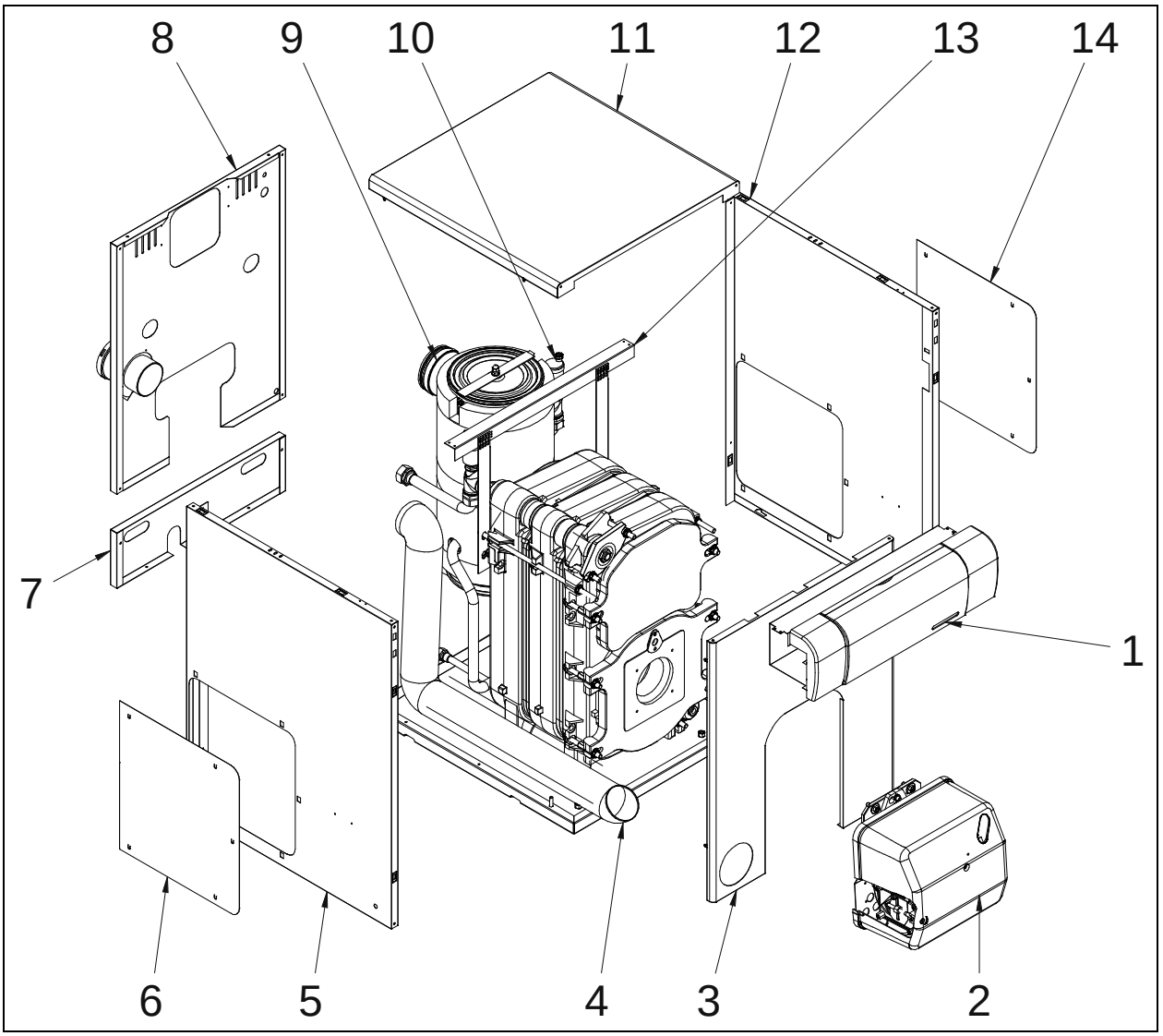

17.3 FRONT ELECTRICS

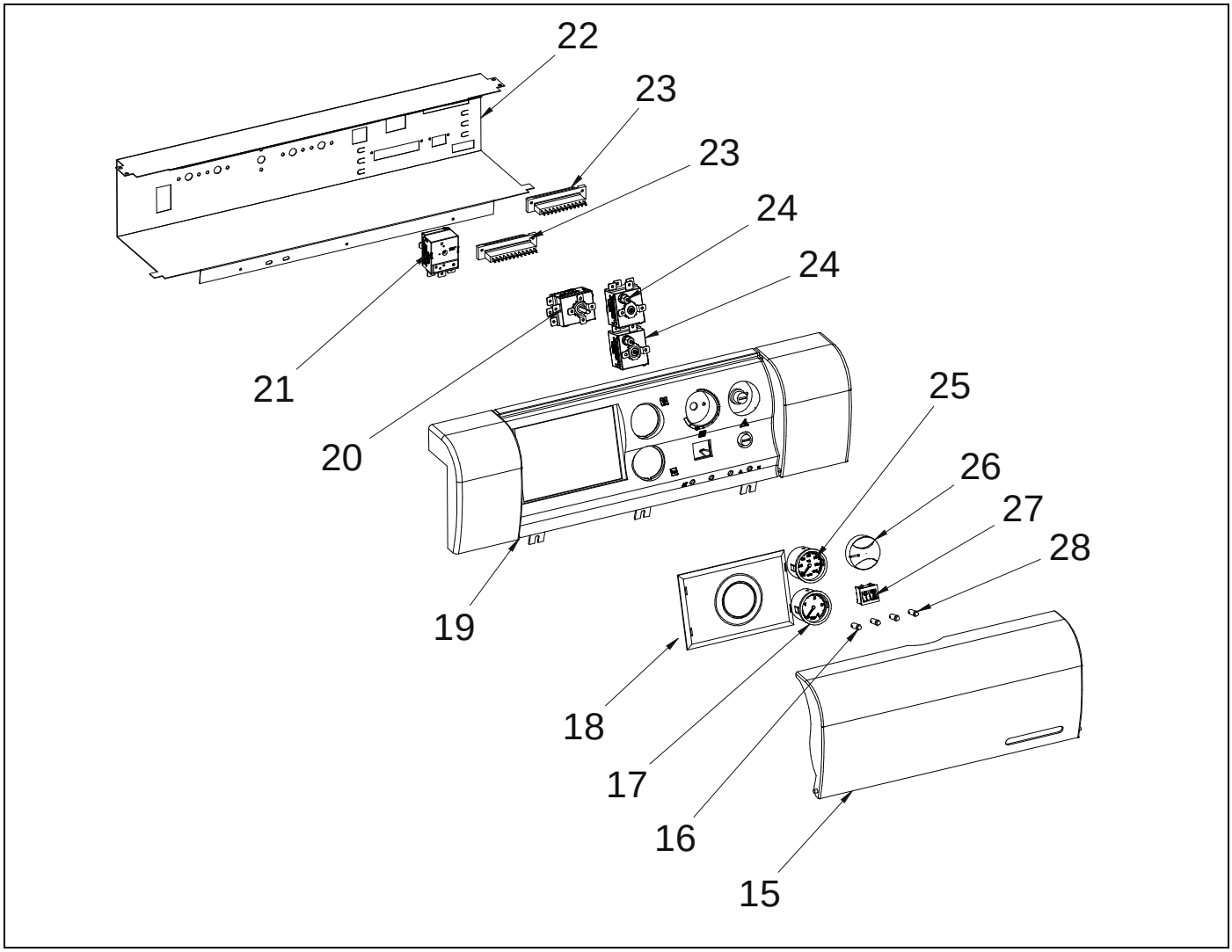

Pos.	Code	Designation
1	SELEJAF003	Electrical board
2	TQDFPJ0008	Burner Jaka HFD 20 Condens
	TQDFPJ0007	Burner Jaka HFD 30 Condens
3	SEPO002302	Front panel
4	CFER000051	Extraflex burner tube
5	SEPO002325	Left side Jaka HFD 30 Condens
	SEPO002307	Left side Jaka HFD 20 Condens
6	SEPO002308	Left side cover
7	SEPO002305	Rear cover
8	SEPO002304	Rear
9	GCHAEV0010	Condenser Ø100
10	CFOV000024	Drain valve
11	SEPO002310	Top Jaka HFD 20 Condens
	SEPO002326	Top Jaka HFD 30 Condens
12	SEPO002316	Right side Jaka HFD 20 Condens
	SEPO002324	Right side Jaka HFD 30 Condens
13		Rigidity

Pos.	Code	Designation
14	SEPO002309	Right side cover
15	CELEC000175	Control panel cover
16	CELC000040	Amber pilot light
17	CELC000137	Manometer
18	CELC000178	Panel cover
19	CELC000171	Control panel
20	CELC000007	Control thermostat (TC)
21	CELC000034	Thermostat 93º (TF3)
22	MGALPL0006	Control box fastener
23	CELC000042	Weidmuller 12-pole terminal strip
24	CELC000022	Safety thermostat 110º (TS)
		Fumes safety thermostat (TH)
25	CELC000136	Thermometer
26	CELC000176	Dial
27	CELC000138	Small bipolar switch
28	CELC000039	Red pilot light

NOTES:

NOTES:

NOTES:

NOTES:

DOMUSA
TEKNIK

POSTAL ADDRESS
Apartado 95
20730 AZPEITIA
Tel: (+34) 943 813 899

HEADQUARTERS & FACTORY
Bº San Esteban s/n
20737 RÉGIL (Guipúzcoa)

www.domusateknik.com

DOMUSA TEKNIK reserves the right to make modifications of any kind to its product characteristics without prior notice.

CDOC001418 17/12/2021