DOMUSA TEKNIK

FUSION

HYDRAULIC MODULE

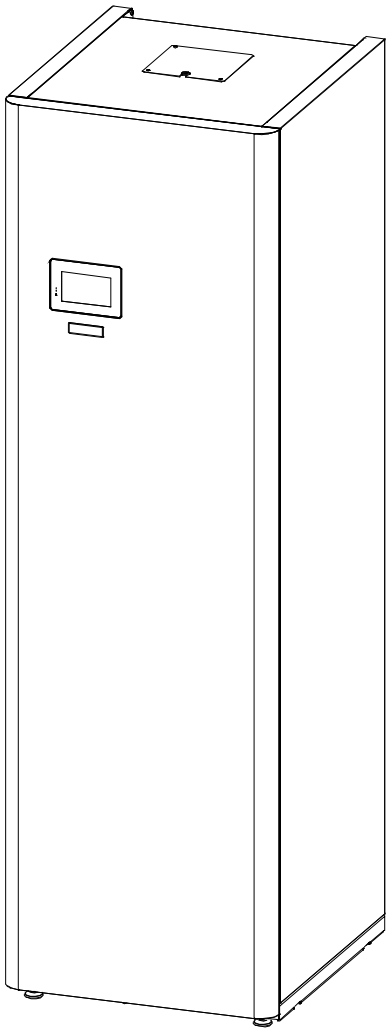

Applus ISO 9001 EC-8890/17 Systems Certification

Applus ISO 14001 MA-3661/17 Systems Certification

EN | INSTALLATION AND OPERATING INSTRUCTIONS

Thank you for choosing a **DOMUSA TEKNIK** heat pump accessory. You have chosen the **FUSION** model from the **DOMUSA TEKNIK** product line. This is an all-in-one hydraulic accumulation module, which in combination with a heat pump of the **DUAL CLIMA** line is able to provide the adequate level of comfort for your home, provided that the hydraulic installation is correctly performed.

This document constitutes an essential part of the product and must be delivered to the end user. Please carefully read the warnings and advice contained in this manual, as they provide important information regarding the safety of the installation, as well as use and maintenance.

The installation of this appliance should be carried out only by qualified personnel, in accordance with the regulations in force and following the manufacturer's instructions.

Both the start-up and any maintenance operation of this appliance should be carried out only by the Official Technical Assistance Services of **DOMUSA TEKNIK**.

Incorrect installation of this product may cause damage to people, animals and objects, for which the manufacturer shall not be held liable.

CONTENTS

1 SAFETY WARNINGS 4
1.1 USAGE AND INSTALLATION WARNINGS 4
1.2 PERSONAL SAFETY WARNINGS 4
1.3 WATER CHARACTERISTICS 5
2 LIST OF COMPONENTS 6
3 INSTALLATION INSTRUCTIONS 7
3.1 ACCESSORIES SUPPLIED 7
3.2 HYDRAULIC INSTALLATION 8
3.3 ASSEMBLY OF THE DHW PROBE 9
3.4 ASSEMBLY AND CONNECTION OF THE CONTROL PANEL 11
3.5 CONNECTING THE DHW DIVERTER VALVE (G1) 13
3.6 FILLING THE INSTALLATION 14
3.7 DRAINAGE 14
4 OPERATION 15
5 OPTIONAL ACCESSORIES 16
5.1 ASSEMBLY AND CONNECTION OF A BACKUP HEATER FOR DWH (E1) 16
5.2 ASSEMBLY AND CONNECTION OF A BACKUP HEATER FOR HEATING (E2) 17
5.3 ASSEMBLY AND CONNECTION OF A BACKUP PUMP (C2) 20
5.4 HEATING EXPANSION VESSEL 22
6 RECYCLING AND DISPOSAL 24
7 ELECTRICAL DIAGRAM 25
8 DIAGRAMS AND MEASUREMENTS 26

1 SAFETY WARNINGS

1.1 Usage and installation warnings

The **FUSION** module should be installed by personnel authorised by the Ministry of Industry, in compliance with the laws and regulations in force in the matter. The precautions detailed here cover very important issues, so please be sure to follow them accordingly.

Please carefully read this instruction manual and keep it in a safe, easily accessible place. **DOMUSA TEKNIK** shall not be held liable for any damage that may occur due to failure to follow these instructions.

The **FUSION** storage module can only be installed in combination with a heat pump from the **DUAL CLIMA** line from **DOMUSA TEKNIK**. The **FUSION** module, in combination with a **DUAL CLIMA** heat pump, is suitable for use in both heating and cooling installations, and can be combined with fan coils, underfloor heating/cooling and low-temperature radiators. It should be connected to a heating/cooling system and to a hot water distribution network that is compatible with its performance and power.

This appliance should only be used for the purpose for which it has been expressly designed. Any other use is considered unsuitable and therefore hazardous. The manufacturer shall not be considered liable under any circumstances for damage caused by unsuitable, erroneous or improper use.

Remove all the packaging and check that the contents are complete. In case of doubt, do not use the appliance and refer to the supplier. Keep the packaging elements out of reach of children, as they can be dangerous.

Improper installation or placement of equipment or accessories may cause electrocution, short circuit, leakage, fire, or other damage to the equipment. Use only accessories or optional equipment manufactured by **DOMUSA TEKNIK** and specifically designed to work with the products presented in this manual. Do not modify, replace or disconnect any safety or control device without first consulting the manufacturer or the Official Technical Assistance Service of **DOMUSA TEKNIK**.

When it is decided not to use the equipment anymore, the parts likely to constitute potential sources of danger should be properly decommissioned.

1.2 Personal safety warnings

Always wear suitable personal protection equipment (protective gloves, safety glasses, etc.) when carrying out installation and/or maintenance operations in the unit.

Do not touch any switch with wet fingers. Touching a switch with wet fingers may cause electric shock. Before accessing the electrical components, fully disconnect the power supply.

Do not touch water pipes or internal parts during and immediately after operation. Pipes and internal parts may be excessively hot or cold, depending on the use of the unit.

The hands may be burned by cold or heat in case of improperly touching pipes or internal parts. To avoid injury, wait until the pipes and internal parts return to their normal temperature. Alternatively, if access is required, be sure to wear appropriate safety gloves.

1.3 Water characteristics

The water must be in accordance with Directive EU 2020/2184 on the quality of water intended for human consumption. Special attention must be paid to the following parameters:

- Maximum chloride concentration: 250 mg / l.
- Maximum sulphate concentration: 250 mg / l.
- Maximum concentration of chlorides and sulphates: 300 mg / l.
- Maximum conductivity: 600 µS / cm.

When the chlorine concentration in the Domestic Water exceeds 250 mg/l, it is recommended that anti-corrosion protection should be applied to the inside of the inter-accumulator so as to avoid its premature deterioration. As an option **DOMUSA TEKNIK** supplies electronic cathodic protection that is suitable for the **FUSION** range. To install it, read carefully the assembly instructions that are provided with the same.

2 LIST OF COMPONENTS

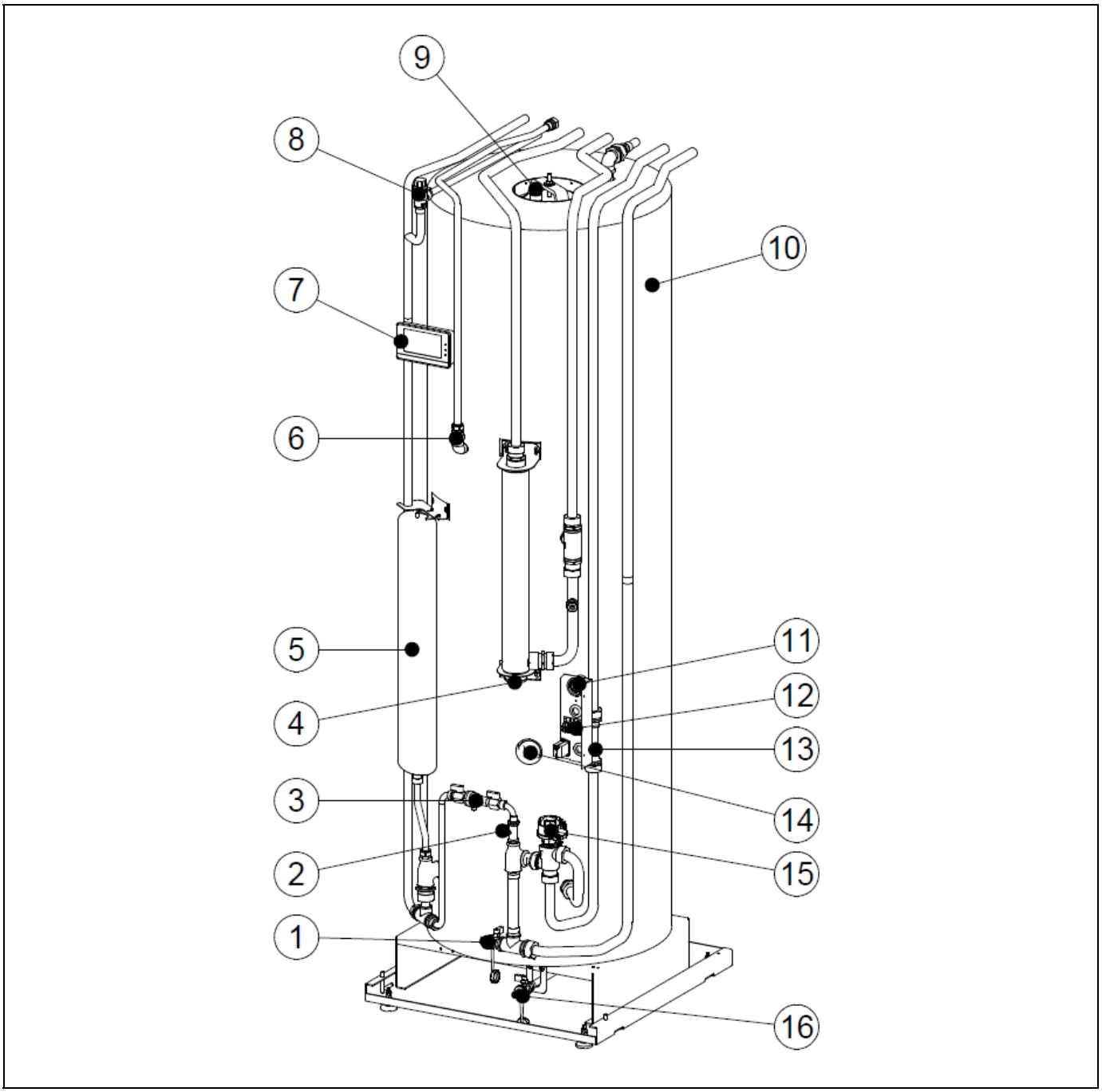

1. Installation drain valve.
2. Heating expansion valve.
3. Fill disconnector.
4. Heating E2 support heating element (Optional).
5. DHW expansion valve.
6. Dielectric sleeve.
7. Control panel.
8. DHW safety valve.
9. Bulb holder for DHW probe.
10. DHW accumulator.
11. Pressure gauge.
12. Terminal strip.
13. Installation support pump **C2** (Optional).
14. DHW support heating element **E1** (Optional).
15. 3-way motorized diverter valve.
16. DHW drain valve.

3 INSTALLATION INSTRUCTIONS

The **FUSION** hydraulic module can only be installed in combination with a heat pump from the **DUAL CLIMA** line supplied by **DOMUSA TEKNIK**. Therefore, for their operation, these devices should be connected to each other, both hydraulically and electrically. In this section, the necessary operations for said connection are described in detail.

3.1 Accessories Supplied

The following accessories are supplied inside the **FUSION** hydraulic module inside a documentation bag. Before proceeding with the installation of the machine, make sure you receive them and that they are in good condition:

Documentation: Inside the machine, by opening the front, the documentation bag can be located, including all the manuals and documents necessary for the use and installation of the equipment.



2 x Connection fitting Ø18x3/4" and inner sleeve: Special fitting for the connection of the DHW Domestic Cold Water inlet pipe (see "*Sketch and measurements*"). For its correct use, please read carefully the section "*Hydraulic installation*".

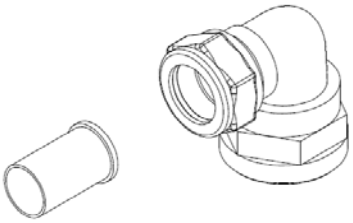

4 x Connection fitting Ø22x1" and inner sleeve: Special fitting for the connection of the pipes with the **DUAL CLIMA** heat pump and the Heating/Cooling Installation (see "*Diagrams and Measurements*"). For its correct use, please read carefully the section "*Hydraulic installation*".

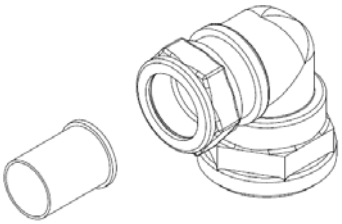

Filter: Water filter for installation. For correct installation, carefully read the following section "*Hydraulic installation*".

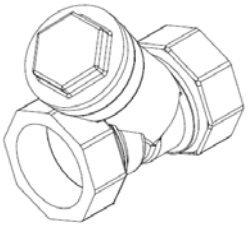

3.2 Hydraulic installation

The hydraulic installation should be carried out by qualified personnel, in compliance with the current installation regulation and considering the following recommendations:

- All water circuit piping **MUST** be insulated to prevent condensation during operation in cooling mode and reduction of cooling and heating capacity, as well as to prevent freezing of outside pipes during winter. The minimum insulation thickness of the pipes should be 19 mm (0.039 W/mK), preferably comprising a closed cell insulation or a vapor barrier. In outdoor areas exposed to the sun, the insulation must be protected from the effects of degradation.
- A **water filter** must be installed in the water circuit of the heat pump, in order to avoid obstructions or narrowing caused by dirt in the installation. The filter **MUST** be installed before the installation is filled with water and in the return branch of the machine, to avoid the entry of dirty water into the heat exchanger (condenser). **It is recommended to insert this filter between two cut-off valves, in order to be able to clean it without emptying the installation**. The type of filter installed must be adapted to the particular characteristics of each installation (type and material of the water pipes, type of water used, volume of water in the installation, ...). The water filter should be checked, and cleaned if necessary, at least once a year, although in new installations it is recommended to check it in the first months after commissioning.
- It is advisable to insert shut-off valves between the installation and the hydraulic module, in order to simplify maintenance work.
- Drain valves and suitable devices should be fitted for the correct removal of air from the circuit during the filling stage.
- The **FUSION** hydraulic module is an accessory that should be installed in combination with a **DUAL CLIMA** heat pump for its correct operation. Therefore, in addition to the recommendations described above, it must comply with those indicated in the heat pump installation manual.

3.3 Assembly of the DHW probe

For the correct functioning of the **FUSION** hydraulic module, the DHW probe, supplied in the **DUAL CLIMA** heat pump, must be inserted in the bulb sheath provided in the module tank. This probe is located inside the machine and is identified as "**DHW TANK SENSOR**". For correct assembly, the probe must be guided to where the **FUSION** module has been placed and inserted into the bulb sheath provided for it in the same, following the steps indicated below:

1. Remove the access cover to the tank, located on the roof of the module, by unscrewing the 3 fixing screws and the fastening nut of the tank.

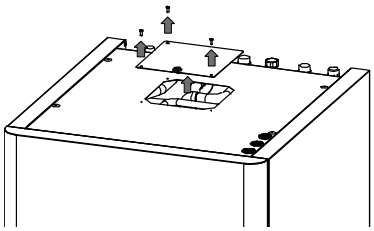

2. Pass the bulb of the DHW temperature sensor ("DHW TANK SENSOR") through the rubber cable duct provided in the cover.

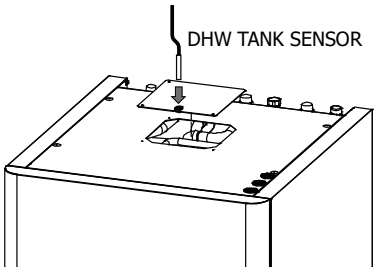

3. Insert the sensor inside the bulb sheath provided in the tank. Be sure to insert the sensor bulb until it stops against the bottom of the bulb sheath.

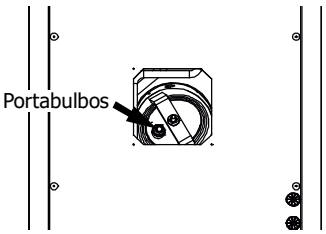

4. Reassemble the access cover to the tank on the roof of the module, tightening the 4 screws and the fastening nut.

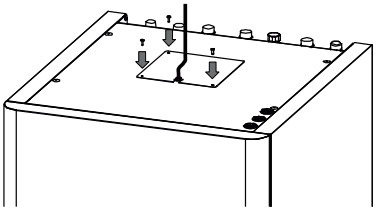

5. For the electrical connection of the probe, remove the resistor that is sent connected to the **T13 (19 and 20)** terminals of the heat pump input strip and connect the DHW probe in its place.

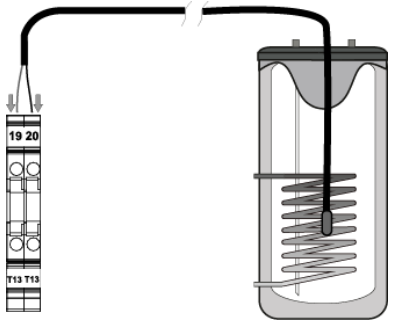

The probe supplied with the heat pump is 5 metres long. Where necessary, it can be extended up to a maximum distance of 20 metres (section between 0,25÷1,25 mm2).

IMPORTANT: When working on the electrical installation of the heat pump, make sure that it is disconnected from the electrical network.

3.4 Assembly and connection of the control panel

The control panel is supplied inside the heat pump and must be mounted on the front of the **FUSION** hydraulic module. To do this, open the module door and access the control panel holder located in the rear part. For its correct assembly, please carefully follow the following steps:

1. Open the door of the **FUSION** module.

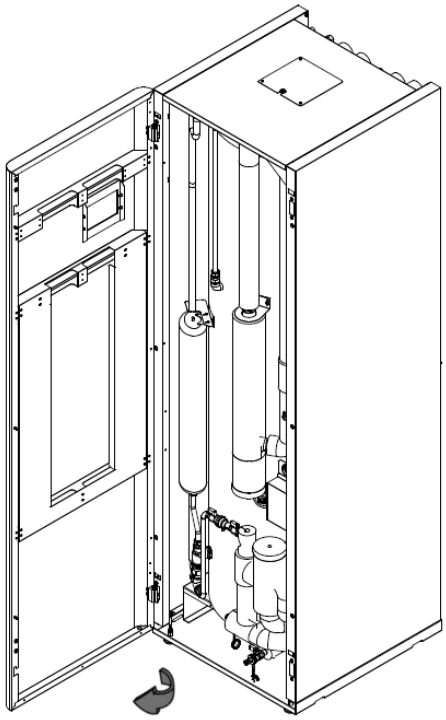

2. Support the outside of the door of the **FUSION** module with your hand.

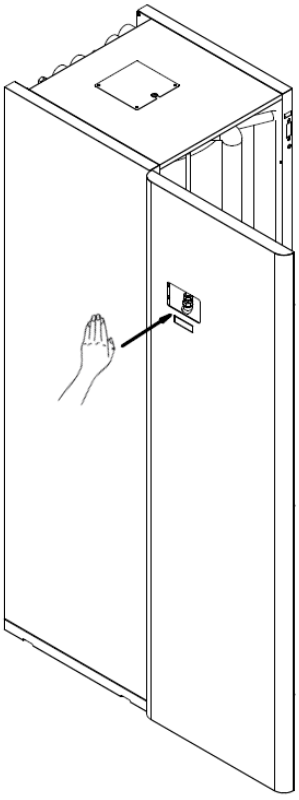

3. Keeping your hand on the outside of the door, attach the control panel removed from the **DUAL CLIMA** heat pump, at the rear of the front, into the hole in the control-holder support and press lightly until it is flush with the surface of the door.

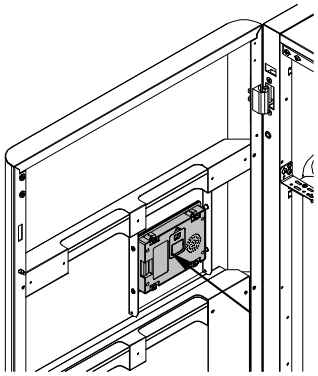

4. Tighten the 4 screws by hand tightening, until the control panel is fixed. It is not necessary to use a wrench, it is sufficient to adjust by hand.

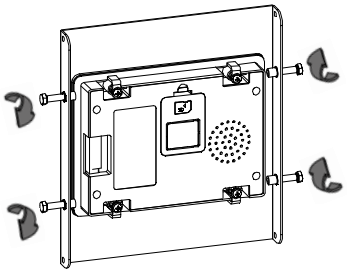

5. Insert the connector, which incorporates the cable for the heat pump control panel, at its end with the connector on the back of the control panel. A sufficiently long cable length must be provided inside the module, in such a way that it is possible to open the front of the equipment without having to disconnect said cable and facilitate any maintenance operation inside.

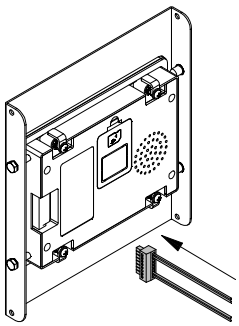

Before switching on the heat pump, the control panel must be connected to the external machine. To do this, pass the cable that is supplied inside the heat pump (located alongside the probe harness) to

the interior of the **FUSION** module. The hydraulic module has a series of cable ducts in its roof, through one of which it will be possible to introduce the cable inside the equipment.

The cable supplied with the heat pump is 5 metres long. Where necessary, it can be extended up to a maximum distance of 30 metres (section between 0,25÷1,25 mm2).

IMPORTANT: When working on the electrical installation of the heat pump, make sure that it is disconnected from the electrical network.

IMPORTANT: Provide a sufficient length of cable inside the module in order to facilitate the opening of the front cover.

3.5 Connecting the DHW diverter valve (G1)

The **FUSION** hydraulic module includes a motorised 3-way diverter valve, which is responsible for directing the flow of water from the heat pump to the DHW heat exchanger or to the heating/cooling system, according to the command signal received from it. To do this, a 3-wire electrical hose must be routed from the terminal strip of the **DUAL CLIMA** heat pump to the inside of the **FUSION** module. The hydraulic module has a series of cable ducts in its roof, through one of which it will be possible to introduce the cable inside the equipment.

The electrical connection of the valve will be made between the general connection terminal of the heat pump and the terminal strip of the **FUSION** module, by removing the cover to access it. The following figures describe the form of connection of the motorised valve according to the heat pump version available:

DUAL CLIMA Heat pump **FUSION hydraulic module**

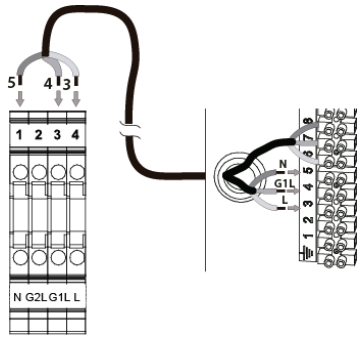

IMPORTANT: When working on the electrical installation of the heat pump, make sure that it is disconnected from the electrical network.

3.6 Filling the installation

The **FUSION** hydraulic module has a filling disconnector and a manometer, by means of which the water filling of the complete Heating/Cooling system can be carried out, including the external unit and the exchanger of the DHW cylinder. In turn, the hydraulic installation should incorporate the drain valves and hydraulic components necessary for its correct filling.

To carry out the filling, open the disconnector valves until the manometer indicates a pressure between 1 and 1.5 bar. The heat pump (external unit) includes a manual drain valve on the upper part of the heat exchanger flow tube (condenser). Open it during the filling process and wait for the water to start running (please refer to the operations manual of the **DUAL CLIMA** heat pump). The air should also be bled from the rest of the installation using the air bleed valves provided. The filling must be carried out slowly, thereby facilitating air evacuation from the water circuit. Once the installation is full, close the disconnector valves.

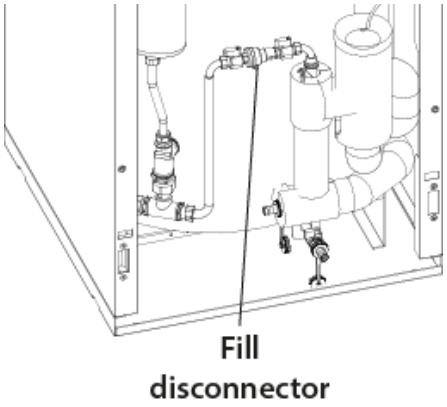

IMPORTANT: Starting the heat pump without water may cause serious damage to it.

3.7 Drainage

The **FUSION** hydraulic module has 2 drain valves: one to drain the water from the primary installation and the other to drain the Domestic Water from the inside of the tank. For the correct drainage of any of the two circuits, a flexible tube should be connected to the corresponding tube and led to a drain. In the case of the drainage of the primary installation, it is advisable to open the steam traps present in the heating/air conditioning system so that air enters the circuit once the pressure in the circuit has been lost. After draining the boiler, close the valve again and remove the flexible tube.

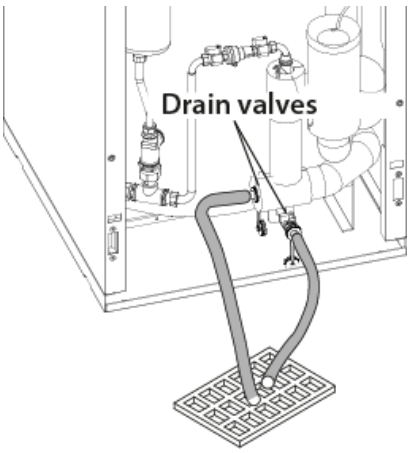

4 OPERATION

The **FUSION** hydraulic module is a passive accessory. Therefore, its operation will be fully managed by the **DUAL CLIMA** heat pump controllers connected to it, which should be mounted on the front of the module (see "*Assembly and connection of the control panel*"). To properly configure and manage its operation, please carefully read the "Installation and Operating Instructions Manual" supplied alongside the heat pump.

However, to obtain all the features for which the "all-in-one" hydraulic module has been provided, at least it must be ensured that the DHW service and the Heating and/or Cooling service are activated.

The **DUAL CLIMA** heat pump is supplied from the factory configured to provide Heating, Cooling and DHW services. If the installation does not have any of these services, they **MUST** be disabled by adjusting the parameters in the control unit (see "*Settings menu*"). When a service is disabled, all operating modes related to that service will disappear from the control panel.

5 OPTIONAL ACCESSORIES

In order to complete the features offered by the **FUSION** hydraulic tank module, **DOMUSA TEKNIK** offers a wide range of optional accessories that can be integrated **inside** it. The following sections describe the correct assembly and connection of these accessories.

5.1 Assembly and connection of a backup heater for DWH (E1)

The **FUSION** hydraulic module allows the assembly of a heating heater for DHW in the outlet provided for this in the storage tank. With this heater, it will be possible to obtain Domestic Hot Water production temperatures exceeding 50 ºC, enabling the necessary temperatures to be reached for the correct execution of the function for protection against Legionella bacteria. For the assembly, remove the socket cap and seal the heater on it:

1. Disassemble and remove the plug from the socket indicated in the figure.

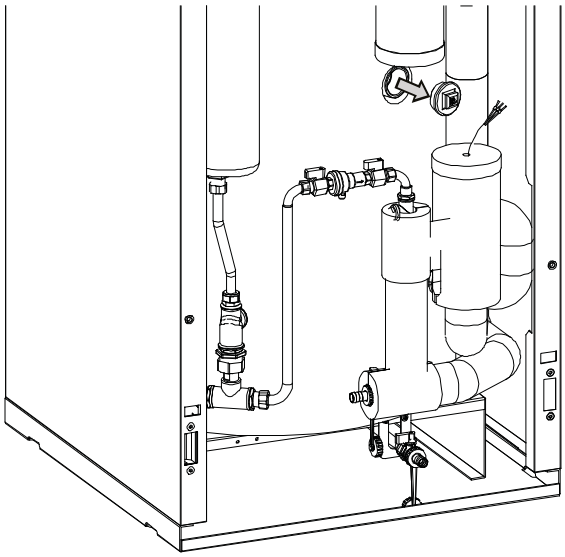

2. Assemble the heater supplied with the kit in its place, making sure to seal it correctly.

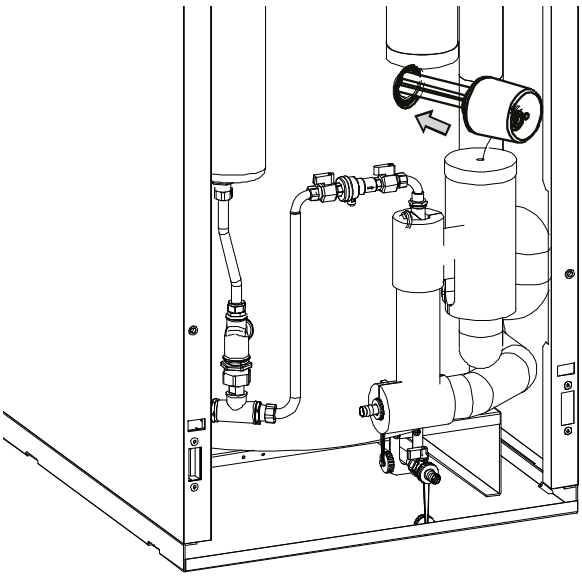

1. Make electrical connections at the **DUAL CLIMA** heat pump.

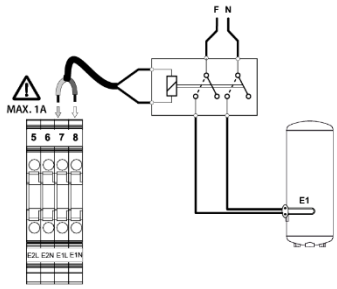

The electrical connection of the resistor is to be made between the terminals **E1L (7)** and **E1N (8)** (Neutral) of the **DUAL CLIMA** heat pump component terminal strip. For this purpose, an electric hose (supplied in the **DOMUSA TEKNIK**resistor kit) from the **FUSION** module to the heat pump, which is located outside. The hydraulic module has a series of cable ducts in the roof, through one of which the hose can be removed from inside the unit.

IMPORTANT: The relay of the E1 output that activates the resistor has a maximum capacity of 1A consumption, therefore, to connect a resistor, a relay (supplied in the DOMUSA TEKNIK resistor kit) must be placed between the terminals of the terminal strip and the resistor.

IMPORTANT: When working on the electrical installation of the heat pump, make sure that it is disconnected from the mains..

5.2 Assembly and connection of a backup heater for Heating (E2)

The **FUSION** hydraulic module allows the assembly of a heating element in the socket provided for this purpose inside. With this heater, the required comfort features will be increased as required by external weather conditions.

For assembly, first cut the insulating shell that covers the socket cap, remove the plug, seal the heater in place and, finally, cover the heater cover with the previous shell:

1. Cut the insulating shell that covers the heater socket.

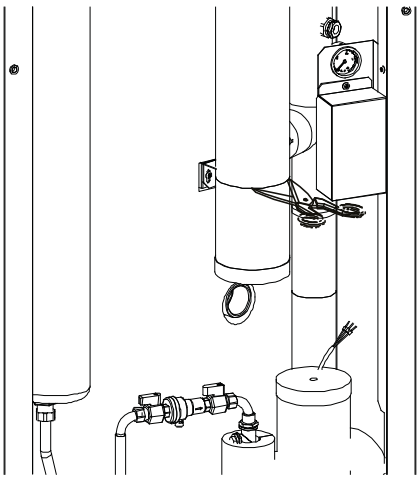

2. Remove the insulating shell.

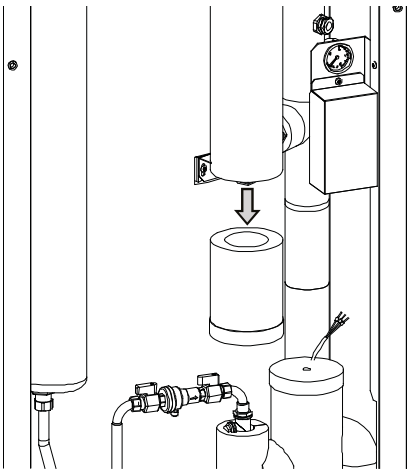

3. Disassemble and remove the 1 1/4” chrome cap.

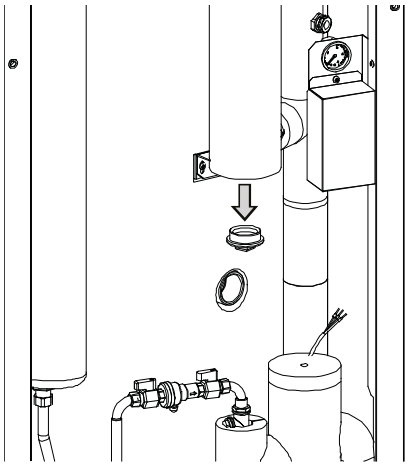

4. Assemble and seal the heater in the socket.

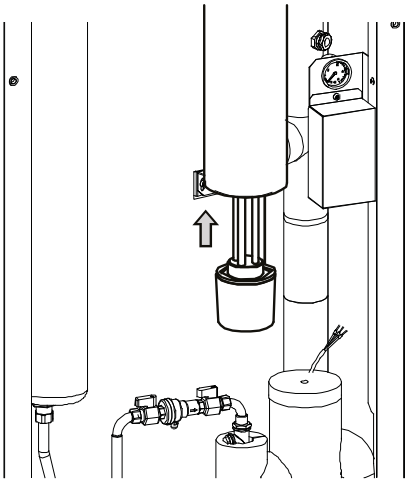

5. Reassemble the insulation shell, making sure to cover the heater cover correctly. Provide a hole in the shell to remove the power cable.

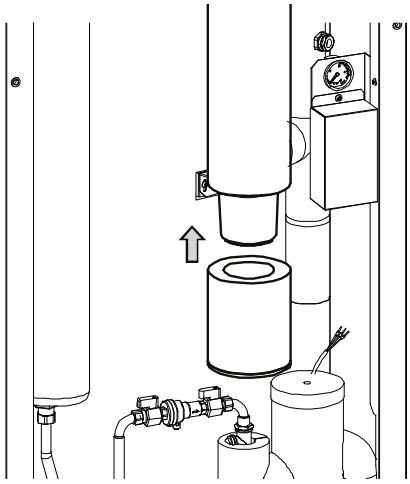

6. Make electrical connections at the **DUAL CLIMA** heat pump.

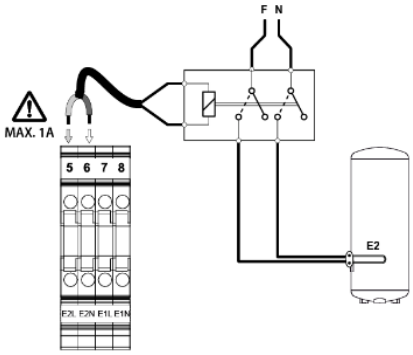

The electrical connection of the resistor is to be made between the terminals **E2L (5)** and **E2N (6)** (Neutral) of the **DUAL CLIMA** heat pump component terminal strip. For this purpose, an electric hose (supplied in the **DOMUSA TEKNIK**resistor kit) from the **FUSION** module to the heat pump, which is located outside. The hydraulic module has a series of cable ducts in the roof, through one of which the hose can be removed from inside the unit.

IMPORTANT: The relay of the E2 output that activates the resistor has a maximum capacity of 1A consumption, therefore, to connect a resistor, a relay (supplied in the DOMUSA TEKNIK resistor kit) must be placed between the terminals of the terminal strip and the resistor.

IMPORTANT: When working on the electrical installation of the heat pump, make sure that it is disconnected from the mains

5.3 Assembly and connection of a backup pump (C2)

The **FUSION** hydraulic module allows the assembly of a circulation pump (C2) to increase the water flow rate of the machine where necessary, in addition to that obtained by the internal pump of the same (**C1**). Circulation pump **C2** operates in parallel with the internal pump of the **DUAL CLIMA** heat pump only when it is operating in Heating or Cooling mode.

For installation, a spool is installed in the return pipe of the heating/cooling system inside the **FUSION** module for assembly of the optional pump offered by **DOMUSA TEKNIK**. To do this, first cut the insulating shell that covers the spool, disassemble it and seal the pump in place:

1. Cut the insulating shell covering the spool and remove it, as indicated in the figure.

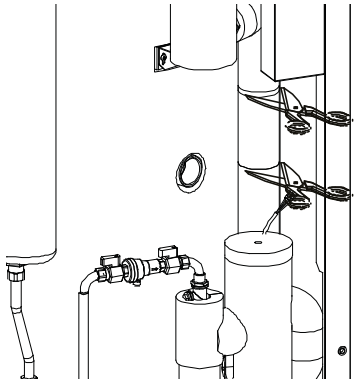

2. Disassemble the spool and remove it.

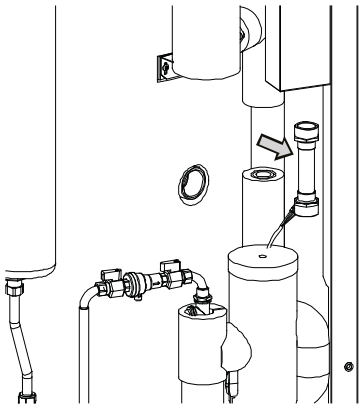

3. Assemble the circulation pump in place, taking into account the direction of flow indicated in the figure and making sure that the connections are sealed.

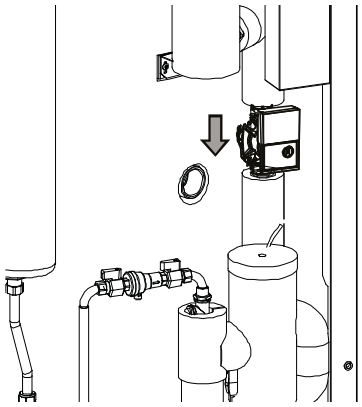

4. Connect the power cable, supplied with the kit, to the **DUAL CLIMA** heat pump.

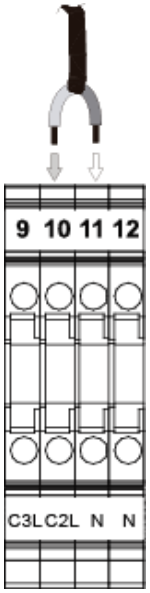

The electrical connection of the pump will be made between terminals **C2L** and **N**/N (neutral) of the heat pump components. To do this, an electrical hose (supplied in the **DOMUSA TEKNIK** pump kit) should be carried from the **FUSION** module to the heat pump, located on the outside. The hydraulic module has a series of cable ducts in its roof, through one of which it will be possible to remove the hose from inside the equipment.

IMPORTANT: When working on the electrical installation of the heat pump, make sure that it is disconnected from the electrical network.

5.4 Heating expansion vessel

The **DUAL CLIMA** heat pump incorporates an expansion vessel with capacity for 5 litres by default. If it is necessary to increase this capacity, due to the total amount of water in the Heating/Cooling system, the **FUSION** hydraulic module allows the installation of an 8-litre expansion vessel kit (optionally supplied) inside it.

For its correct assembly inside the **FUSION** module, once it is ensured that the heating/cooling system is empty, please carefully follow the steps indicated in the following figures:

1. Disassemble the cap from the expansion vessel socket.

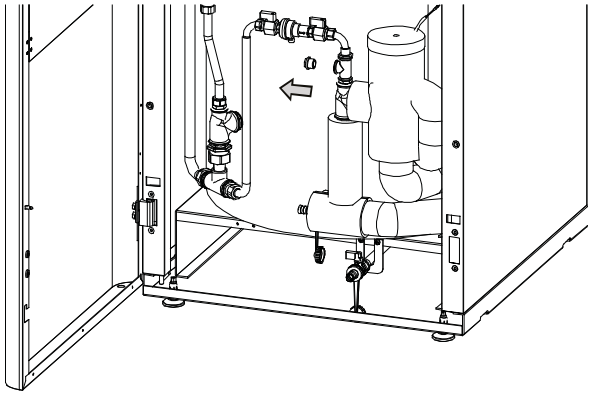

2. Place the expansion vessel under the base of the bottom left of the module, as indicated in the figure, with the socket facing towards the front and upwards.

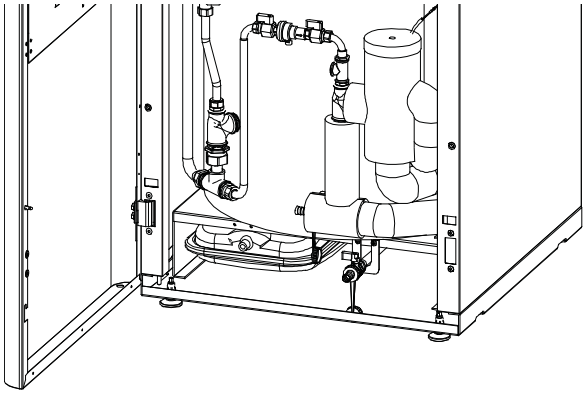

3. Fix the expansion vessel to the base of the module, using the support plate and the screws supplied with the kit, as indicated in the figure.

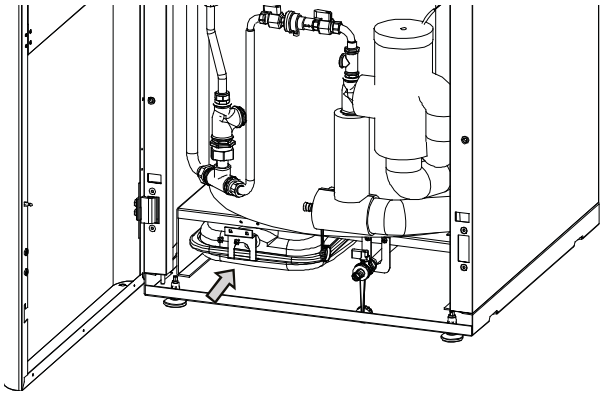

4. Connect the expansion vessel and the socket provided in the module, using the hose supplied with the kit, making sure to seal both ends of the connection correctly.

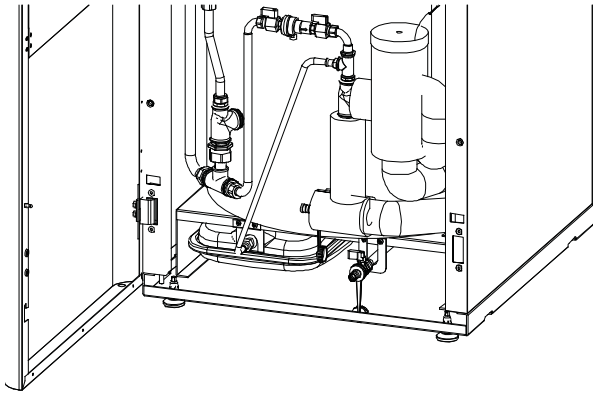

IMPORTANT: Before proceeding with the assembly of the expansion vessel kit inside the module, make sure that the Heating/Cooling system is empty.

6 RECYCLING AND DISPOSAL

Uninstallation

This product should be uninstalled by authorised personnel for the handling of fluorinated gases.

The heat pump contains R32 refrigerant. Any leakage of refrigerant into the atmosphere should be avoided.

Recycling

For recycling or disposal, the heat pump must be taken to a waste collection point. Contact qualified personnel for the handling of fluorinated gases. Contact the installer or the local authority for more information.

Disposal

Do not attempt to uninstall this product on your own.

The uninstallation and treatment of the refrigerant, oil and other components should be carried out in accordance with the local and national legislation. The complete equipment, including the compressor and the oil contained, should be disposed of at a waste collection point, as it may contain refrigerant waste.

All refrigerants should be removed and returned to the manufacturer for recycling or disposal.

7 ELECTRICAL DIAGRAM

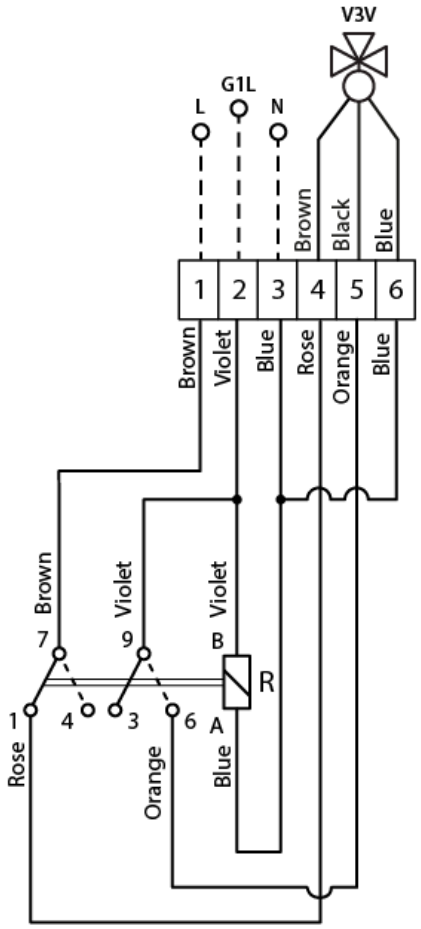

V3V: 3 way reversing valve.

R: Relay.

L: Heat Pump DHW signal (NC).

G1L: Heat Pump Heating signal (NO).

N: Heat Pump common signal (Neutral).

8 DIAGRAMS AND MEASUREMENTS

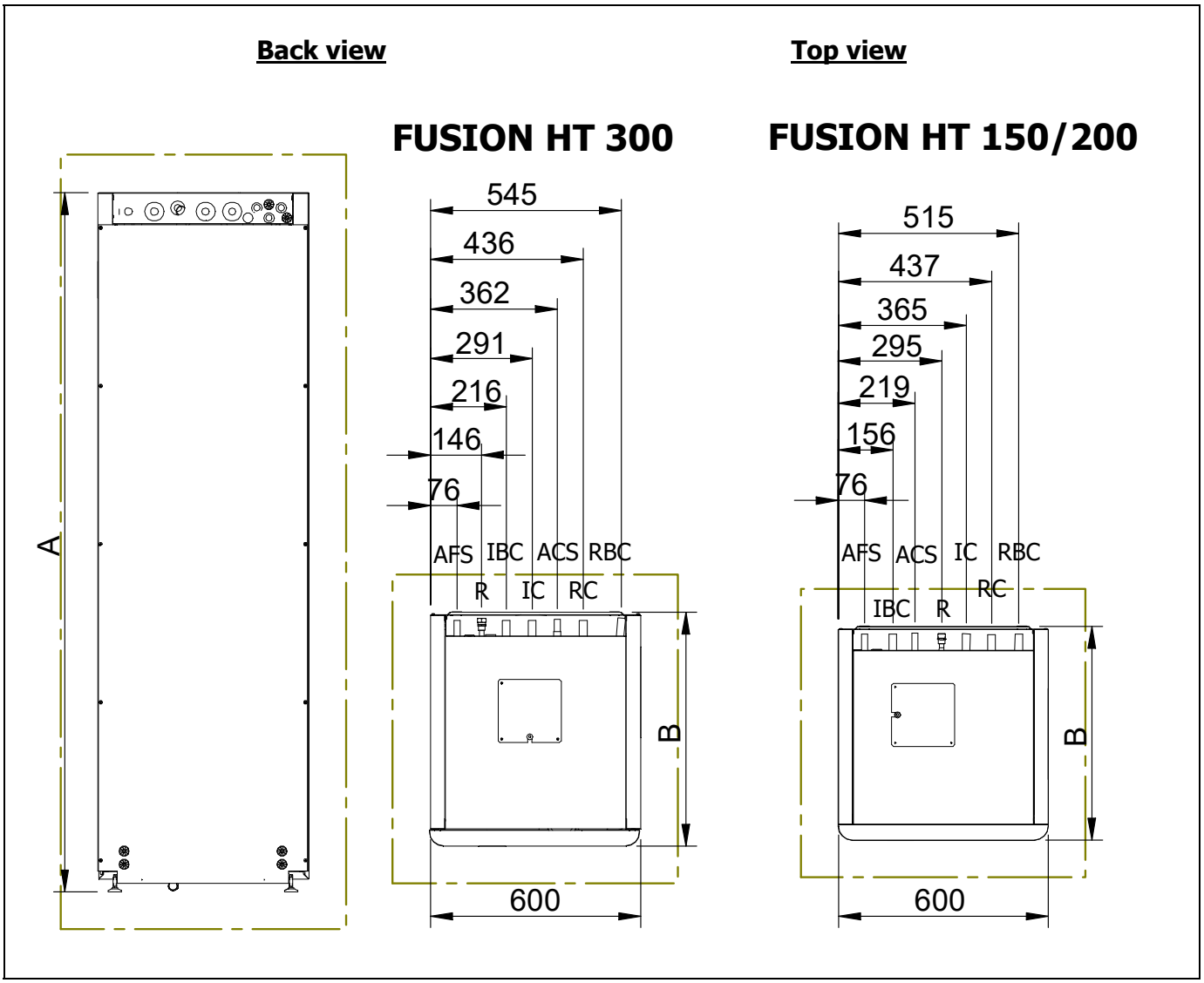

	FUSION 150 (mm)	FUSION 200 (mm)	FUSION 300 (mm)
Total height A	1560	1965	1995
Rack B	610	610	660

IC: Heating/Cooling Flow, Ø22 (fitting 1" M).

RC: Heating/Cooling Return, Ø22 (fitting 1" M).

IBC: Heat Pump Flow, Ø22 (fitting 1" M).

RBC: Heat Pump Return, Ø22 (fitting 1" M).

ACS: Domestic Hot Water Outlet, 1/2" M.

AFS: Domestic Cold Water Inlet, Ø18 (fitting 3/4" M).

R: DHW Recirculation Socket, 1/2" M.

NOTES:

DOMUSA TEKNIK

POSTAL ADDRESS
Apartado 95
20730 AZPEITIA
Spain

FACTORY & OFFICES
Bº San Esteban s/n
20737 ERREZIL (Gipuzkoa)
Spain
Tel: (+34) 943 813 899

CDOC002805 10/12/24

www.domusateknik.com

DOMUSA TEKNIK reserves the right to make modifications of any kind to its product characteristics without prior notice.