DOMUSA TEKNIK

FUSION EC

Hydraulic Module

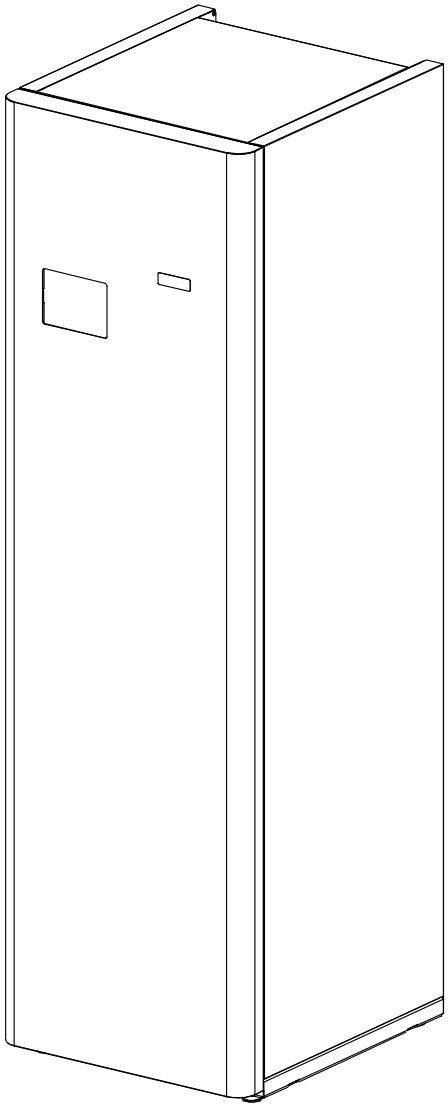

EN | INSTALLATION AND OPERATING INSTRUCTIONS

We would like to thank you for choosing a **DOMUSA TEKNIK** heat pump accessory. You have chosen the **FUSION EC** model from the **DOMUSA TEKNIK** range. This is an "all-in-one" hydraulic accumulation module. When it is installed alongside a heat pump from the **DUAL CLIMA EC** product range and with the proper hydraulic installation, it can provide the level of comfort you need in your home.

This document is an integral and essential part of the product and must be given to the user. Please read the warnings and advice contained in this manual carefully as they provide important information for safe installation, operation and maintenance.

This equipment must only be installed by qualified personnel in accordance with current standards and following the manufacturer's instructions.

Both commissioning and all maintenance tasks on the equipment must be performed exclusively by **DOMUSA TEKNIK** Official Technical Assistance Services.

Incorrect installation of this equipment may cause damage to people, animals and property. The manufacturer accepts no liability for such damage.

CONTENTS

1 SAFETY WARNINGS 4
1.1 USE AND INSTALLATION WARNINGS 4
1.2 PERSONAL SAFETY WARNINGS 4
1.3 WATER CHARACTERISTICS 5
2 LIST OF COMPONENTS 6
3 INSTALLATION INSTRUCTIONS 7
3.1 ACCESSORIES SUPPLIED 7
3.2 HYDRAULIC INSTALLATION 7
3.3 ELECTRICAL POWER SUPPLY OF THE INTERNAL MODULE 8
3.4 ASSEMBLY AND CONNECTION OF THE CONTROL PANEL 9
3.5 COMMUNICATION WITH THE EXTERNAL UNIT 9
3.6 ASSEMBLY OF THE DHW SENSOR. 10
3.7 ASSEMBLY OF AN E1 BACKUP HEATING ELEMENT FOR DHW (OPTIONAL) 11
3.8 ASSEMBLY OF AN E2 BACKUP HEATING ELEMENT (OPTIONAL) 12
3.9 ASSEMBLY AND CONNECTION OF A C2 BACKUP PUMP (OPTIONAL) 13
3.10 HEATING EXPANSION VESSEL (OPTIONAL) 13
3.11 ASSEMBLY AND CONNECTION OF OPTIONAL ACCESSORIES 15
3.12 FILLING THE INSTALLATION 15
3.13 DRAINING 15
4 OPERATION 16
5 ELECTRICAL DIAGRAM 17
6 DIMENSIONS 19

1 SAFETY WARNINGS

1.1 Use and installation warnings

The **FUSION EC** module must be installed by technicians authorised by the Ministry of Industry and in compliance with current applicable laws and regulations. Please follow these recommendations strictly, given the importance of the items they refer to.

Read this instruction manual carefully and keep it safe where it can easily be located. **DOMUSA TEKNIK** shall not be liable for any damage caused by not following these instructions.

The **FUSION EC** accumulation module can only be installled in combination with a heat pump from the **DOMUSA TEKNIK DUAL CLIMA EC** product range. When installed alongside a **DUAL CLIMA EC** heat pump, the **FUSION EC** module can be used for both heating and cooling installations, in combination with fancoils, underfloor heating/cooling and low temperature radiators. It must be connected to a heating/cooling installation and a domestic hot water distribution network compatible with its performance and power features.

This appliance must only be used for its intended purpose. Any other use should be considered inappropriate and therefore dangerous. Under no circumstances shall the manufacturer be held liable for damage caused by improper, incorrect or unreasonable use.

After removing all packaging, check that the contents are intact. If in doubt, do not use the equipment and contact the supplier. The packaging must be kept out of the reach of children as it is potentially hazardous.

Inappropriate installation or placement of the equipment or accessories may cause electric shock, short-circuits, leaks, fires or other damage to the equipment. Use only optional accessories or equipment manufactured by **DOMUSA TEKNIK** and specifically designed to work with the products presented in this manual. Do not make any changes to, replace or disconnect any safety or control devices without previously consulting with the manufacturer or the **DOMUSA TEKNIK** Official Technical Assistance Service.

When it is decided not to use the equipment any more, all parts that could potentially be a hazard must be deactivated.

1.2 Personal safety warnings

Always wear proper personal protection equipment (safety gloves, safety goggles, etc.) when performing installation and/or maintenance tasks with this equipment.

Do not touch any switches with wet hands. Touching a switch with wet hands can trigger electrical discharges. Disconnect the electrical power supply completely before working on electric components.

Do not touch water pipes or internal parts while or immediately after the equipment is running. The internal pipes or parts may be very hot or very cold, depending on how the unit is being used.

Hands can suffer heat or cold burns if they touch internal pipes or parts at inappropriate times. To prevent injuries, wait until the internal pipes or parts return to their normal temperature; otherwise, use appropriate safety gloves to handle them.

1.3 Water characteristics

The water must be in accordance with Directive EU 2020/2184 on the quality of water intended for human consumption. Special attention must be paid to the following parameters:

- Maximum chloride concentration: 250 mg / l.
- Maximum sulphate concentration: 250 mg / l.
- Maximum concentration of chlorides and sulphates: 300 mg / l.
- Maximum conductivity: 600 µS / cm.

When the chlorine concentration in the Domestic Water exceeds 250 mg/l, it is recommended that anti-corrosion protection should be applied to the inside of the inter-accumulator so as to avoid its premature deterioration. As an option **DOMUSA TEKNIK** supplies electronic cathodic protection that is suitable for the **FUSION EC** range. To install it, read carefully the assembly instructions that are provided with the same.

2 LIST OF COMPONENTS

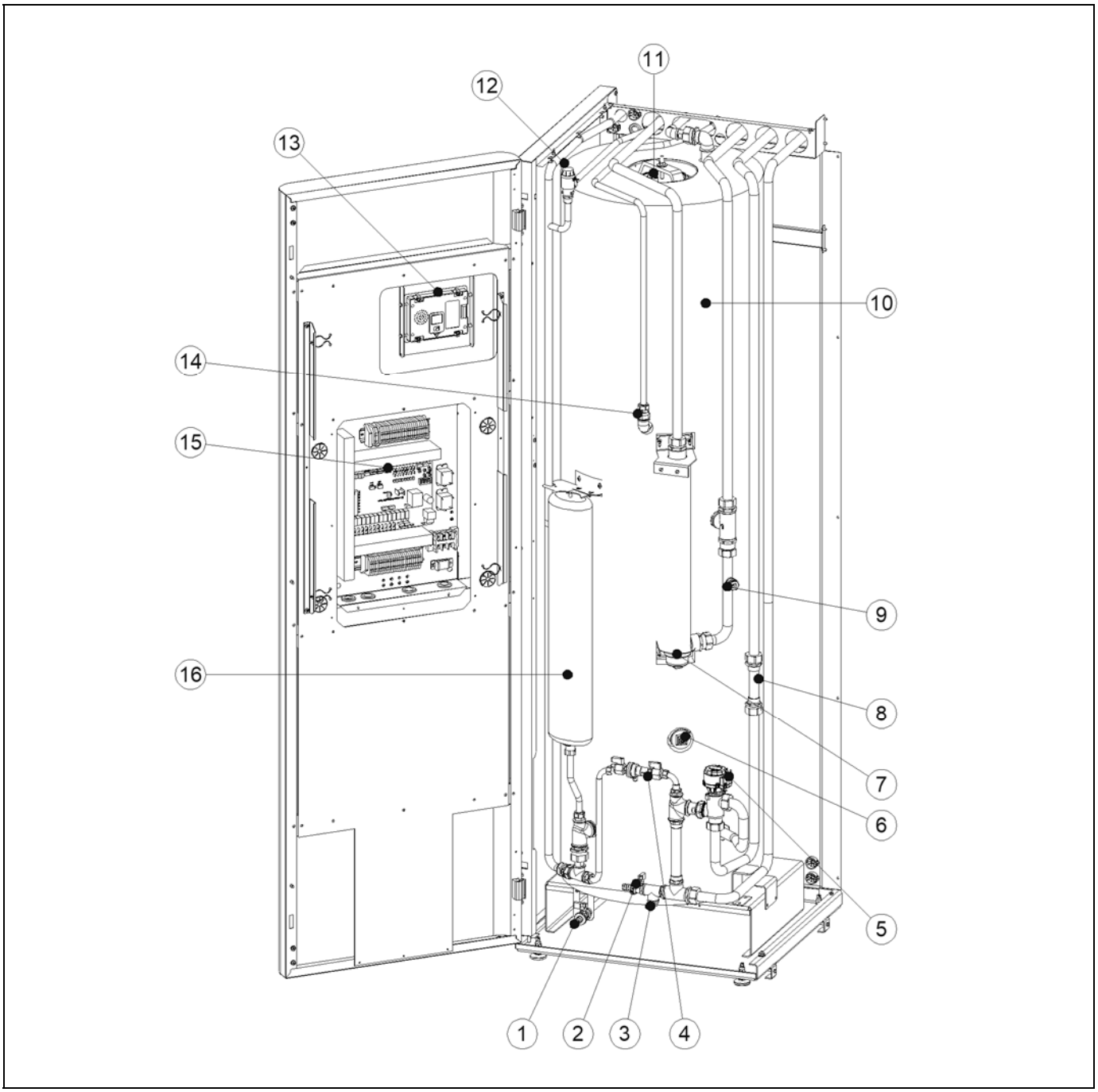

1. DHW drain valve.
2. Installation drain valve.
3. Connection for heating expansion vessel.
4. Filling disconnector.
5. **G1** 3-way diverter valve.
6. **E1** DHW backup element connection.
7. **E2** heating backup element connection.
8. **C2** installation backup pump.
9. Pressure gauge.
10. DHW storage tank.
11. DHW storage tank immersion sleeve.
12. DHW safety valve.
13. Control unit.
14. Dielectric sleeve.
15. **Easy Connect** electronic module.
16. DHW expansion vessel.

3 INSTALLATION INSTRUCTIONS

The **FUSION EC** hydraulic module must be installled in combination with a heat pump from the **DOMUSA TEKNIK DUAL CLIMA EC** product range. For this purpose, the hydraulic and electrical inputs/outputs of both equipment appliances must be interconnected. This sections presents a detailed description of the steps required for these interconnections.

3.1 Accessories supplied

The following accessories are supplied with the **FUSION EC** hydraulic module, in a bag, along with the documentation. Before installing the equipment, ensure that you have received these and they are in good condition.



Documentatión: The bag containing the documentation can be found inside the hydraulic module; this includes all the manuals and documents needed to install and operate the equipment.



2X Elbow connection fitting Ø18x3/4" and internal sleeve: A special fitting to connect the DHW pipes (see *"Dimensions"*). To ensure proper use, carefully read the section titled *"Hydraulic installation"*.



4X Elbow connection fitting Ø22x1" and internal sleeve: Special fitting to connect the pipes to the **DUAL CLIMA EC** heat pump and the Heating/Cooling Installation (see *"Dimensions"*). To ensure proper use, carefully read the section titled *"Hydraulic installation"*.



Filter: Water filter for the installation. To ensure proper installation, carefully read the section titled *"Hydraulic installation"*.

3.2 Hydraulic installation

The hydraulics must be installed by qualified personnel according to current installation regulations and taking into account the following recommendations:

- The hydraulic connections between the **FUSION EC** module and the **DUAL CLIMA EC** heat pump can be made by using 2 properly insulated pipes to connect intakes **IBC** and **RBC** of the module (see *"Dimensions"*) with the intake and return of the heat pump, respectively.
- All water circuit pipes **MUST** be insulated to prevent condensation during cold mode operation and loss of cooling and heating capacity, as well as to prevent the outdoor pipes from freezing during the winter. The pipe insulation should have a minimum thickness of 19 mm (0.039 W/mK) and be closed cell insulation or vapour barrier insulation. In outdoor areas, the insulation should be protected from the deteriorating effects of the sun.
- A **water filter** should be installed in the heat pump water circuit to prevent clogging or narrowing caused by dirt in the installation. The filter **MUST BE** installed in the equipment's return line before filling the installation with water to prevent dirty water from entering the heat exchanger (condenser). **It is recommended to place this filter between two shut-off valves so cleaning can be performed without having to drain the installation compeletely**. The filter should be appropriate for the specific characteristics of each installation (water pipe types and materials, type of water, volume of water in the installation and so on). In new installations, it is recommended to examine the water filter during the first few months after starting up the equipment; nonetheless, it must be examined and cleaned if necessary at least once a year.

- Shut-off valves should be installed between the installation and the hydraulic module in order to simplify maintenance tasks.
- Air vents and other devices should be placed for proper removal of air from the circuit during the water filling stage.
- Proper operation of the **FUSION EC** hydraulic module requires that it be installed in combination with a **DUAL CLIMA EC** heat pump; therefore, please follow the instructions included in the heat pump installation manual, in addition to the recommendations listed above.

3.3 Electrical power supply of the internal module

The electrical installation of the **FUSION EC** module must be carried out by qualified personnel and according to current corresponding installation regulations. The electrical connections must be made in such a way that the module can be completely isolated and disconnected to perform all maintenance tasks in safe conditions.

The hydraulic module has several cable feedthroughs at the rear for the insertion of the wiring inside the equipment. The cables exposed to outdoor weather conditions must be protected by cable ducts or sleeves or be appropriate for use outdoors (H07RN-F type cable or superior). It is also advisable to keep a minimum distance of 25 mm between power cables (general power supply, diverter valves, backup heating elements, circulation pumps, etc.) and communication and sensor cables (communication cables between units, temperature sensors, ambient temperature sensors, etc.) and run them through separate tubes.

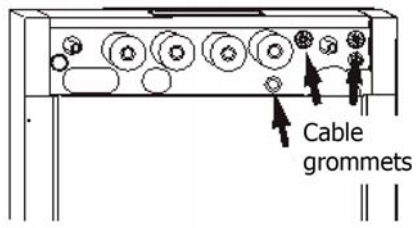

The **FUSION EC** internal unit includes an **Easy Connect** electronic communications module located inside the front door. This is accessed by removing the cover at the rear of the door. The **Easy Connect** module is ready to be connected electrically to the 230 V~ 50Hz voltage at terminals **L** and **N** on the connections strip. **The equipment must be connected to ground.**

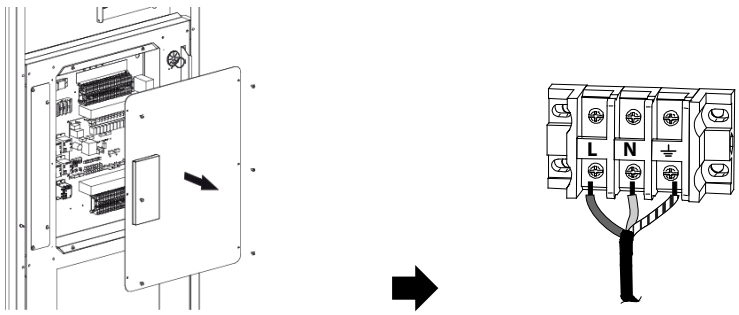

The maximum consumption of the electronic card in the **Easy Connect** module is **5 A**; therefore, **the sum of maximum electrical consumption of all connected accessories must not exceed that amount**, except for the connections of the backup heating elements **E1** and/or **E2**. This is because the **Easy Connect** module is equipped with power relays that allow a maximum consumption of **20 A**.

The sum of maximum electrical consumption of all connected accessories (**backup heating elements**, circulation pumps, diverter valves, etc.) must be taken into account for the calculation of the cable section of the main power supply, as well as the fuses and circuit breakers protecting the electrical installation. The dimensions of the power supply cables must comply with current standards and regulations.

IMPORTANT: Whenever any work is done on the electrical installation, make sure it is disconnected from the main electrical supply network.

3.4 Assembly and connection of the control panel

For the **FUSION EC** hydraulic module to work properly, the control panel supplied with the **DUAL CLIMA EC** external unit must be connected. Take the following steps to install it correctly:

1. Open the door of the hydraulic module.	**2.** Place the control panel on the support. Press slightly to level it with the surface of the door and tighten the screws to fix it in place.	**3.** Extract the control panel connection cable located next to the support and connect the green terminal strip to the connector at the rear of the panel.
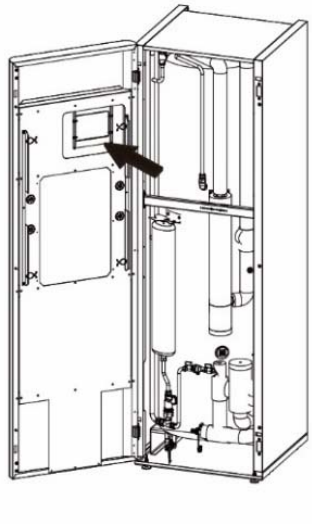	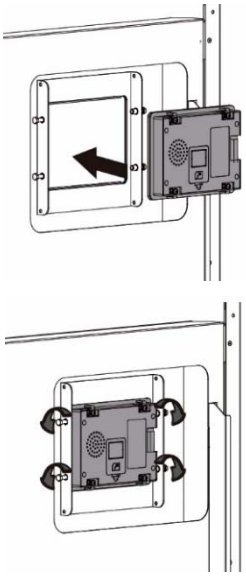	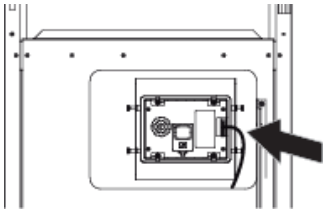

IMPORTANT: Whenever any work is done on the electrical installation, make sure it is disconnected from the main electrical supply network.

3.5 Communication with the external unit

To ensure proper operation, the **Easy Connect** communication module integrated in the **FUSION EC** must be connected to the **DUAL CLIMA EC** outdoor heat pump unit by a 2-wire communications cable. To connect properly, follow the instructions in the *"Connection to the outdoor unit"* section of the "Installation and Operation Instruction Manual" supplied with the **DUAL CLIMA EC** heat pump.

3.6 Assembly of the DHW sensor.

For the **FUSION EC** hydraulic module to work properly, the DHW sensor must be inserted in the immersion sleeve provided in the module storage tank. This DHW sensor is supplied with the **DUAL CLIMA EC** heat pump and identified as the **"DHW TANK SENSOR"**. Take the following steps to install the DHW sensor correctly:

1. Remove the cover of the hydraulic module.	**2.** Insert the tip of the DHW sensor in the immersion sleeve located on the top cover used to access the storage tank.
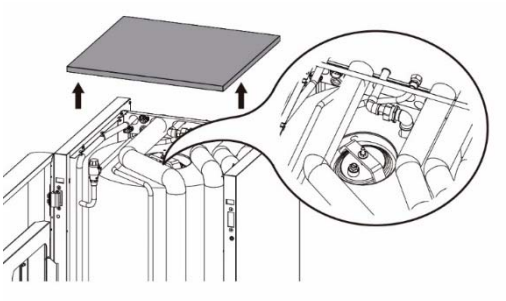	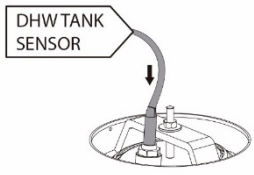 **ATTENTION!** *Make sure to insert the sensor until it comes into contact with the bottom of the immersion sleeve.*
3. Remove the cover from the hydraulic module door to access the connections terminal strip.	**4.** Guide the DHW sensor through the feedthroughs and connect it to the **T13 (19 - 20)** terminals of the **X1** input strip (see *"Electrical diagram"*).
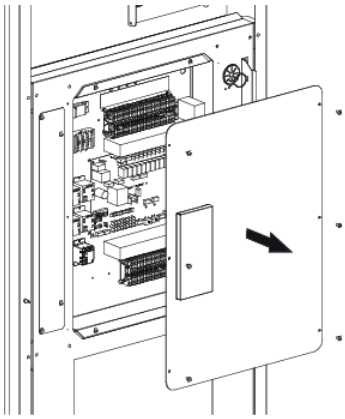	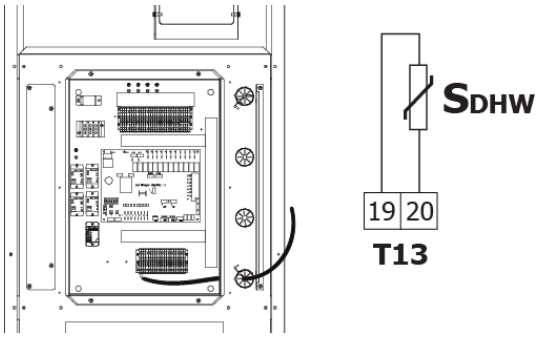 **ATTENTION!** *When finished, place the cover again.*

IMPORTANT: Whenever any work is done on the electrical installation, make sure it is disconnected from the main electrical supply network.

3.7 Assembly of an E1 backup heating element for DHW (Optional)

The **FUSION EC** hydraulic module can mount a backup heating element for the production of DHW at the intake provided for it in the storage tank. This **E1** heating element is activated by a power relay on the electronic communications module with a maximum consumption of **20 A**; therefore, it is not necessary to place a relay between the strip terminals and the heating element kit supplied by **DOMUSA TEKNIK**. To assemble it, remove the plug from the intake and seal the heating element in the intake:

1. Disassemble and remove the plug from the intake indicated in the figure.	**2.** Replace, the plug with the heating element supplied and ensure it is sealed correctly.
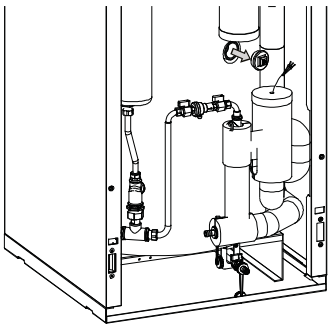	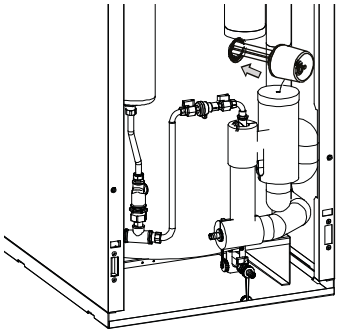
3. Remove the cover from the hydraulic module door to access the connections terminal strip.	**4.** Connect the heating element to the **E1 (19 - 20)** terminals of the **X2** output terminal strip (see *"Electrical diagram"*).
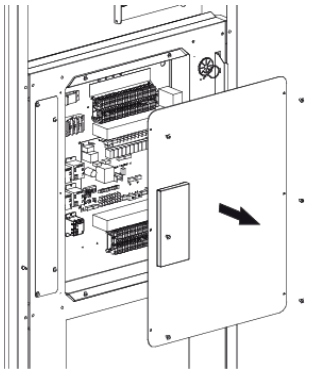	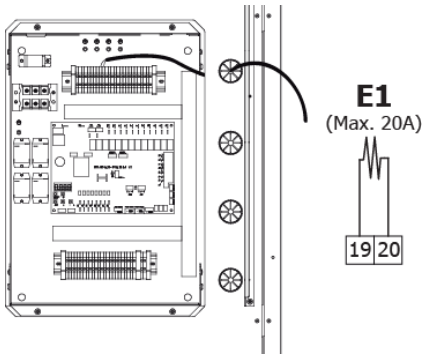 **ATTENTION!** *When finished, place the cover again.*

IMPORTANT: Whenever any work is done on the electrical installation of the hydraulic module, make sure it is disconnected from the main electrical supply network.

IMPORTANT: The maximum electrical consumption of the E1 backup heating elements must be taken into account for the calculation of the cable section of the main power supply, as well as the fuses and circuit breakers protecting the electrical installation.

3.8 Assembly of an E2 backup Heating element (Optional)

The **FUSION EC** hydraulic module can mount a backup heating element at the intake provided for it in the tank at the bottom of the module. This **E2** heating element is activated by a power relay on the electronic communications module with a maximum consumption of **20 A**; therefore, it is not necessary to place a relay between the strip terminals and the heating element kit supplied by **DOMUSA TEKNIK**. To assemble it, remove the plug from the intake and seal the heating element in the intake:

1. Slit the insulating hose that protects the connection of the backup element and remove it.	**2.** Disassemble and remove the plug from the connection, as shown in the figure.
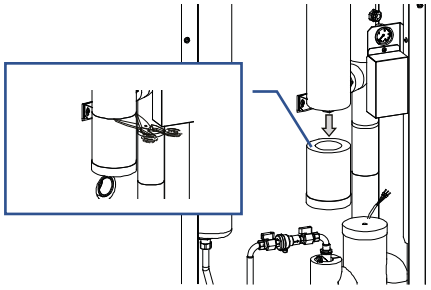	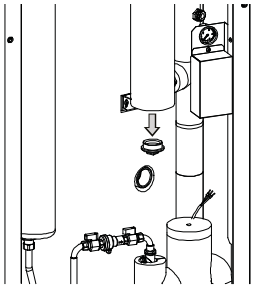
3. Replace the plug with the backup element supplied with the kit and make sure to seal it correctly.	**4.** Place the insulating hose again over the cover of the backup element. Make sure a hole is made for the power cable.
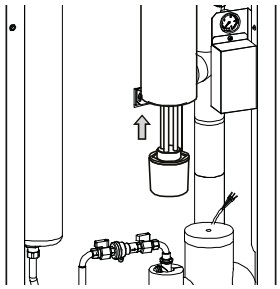	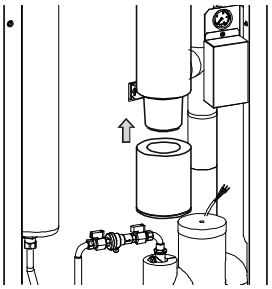
3. Remove the cover from the hydraulic module door to access the connections terminal strip.	**4.** Connect the heating element to the **E2 (21 - 22)** terminals of the **X2** output terminal strip (see *"Electrical diagram"*).
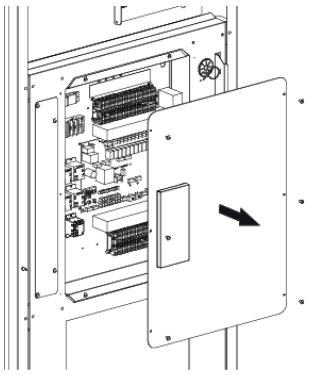	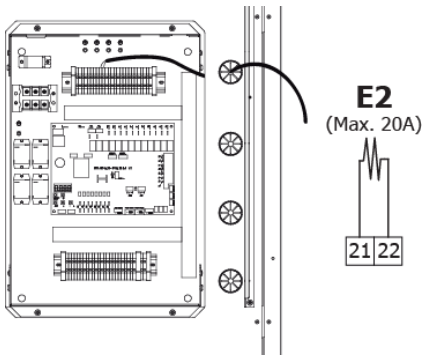 **ATTENTION!** *When finished, place the cover again.*

IMPORTANT: Whenever any work is done on the electrical installation of the hydraulic module, make sure it is disconnected from the main electrical supply network.

IMPORTANT: **The maximum electrical consumption of the E2 backup elements must be taken into account for the calculation of the cable section of the main power supply, as well as the fuses and circuit breakers protecting the electrical installation.**

3.9 Assembly and connection of a C2 backup pump (Optional)

The **FUSION EC** hydraulic module is prepared for the assembly of a **C2** circulation pump to increase the water flow in the Heating/Cooling installation if necessary. This **C2** circulation pump will be synchronised with the indoor pump (**C1**) of the **DUAL CLIMA EC** heat pump whenever it is running in Heating or Cooling mode.

The **FUSION EC** hydraulic module is equipped with a "reel" for the assembly of the optional pump offered by **DOMUSA TEKNIK**.

1. Slit and remove the insulating hose that protects the "reel". Disassemble the reel.	**2.** Assemble and seal the circulation pump in its position, **making sure that the direction of the flow is correct, as shown in the figure.**
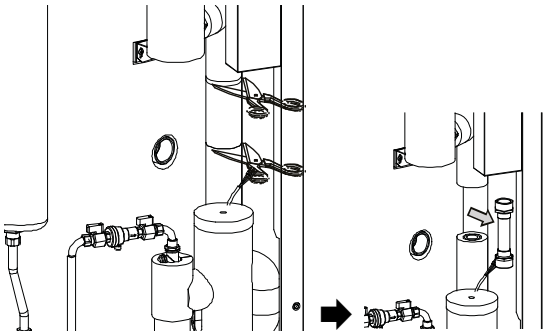	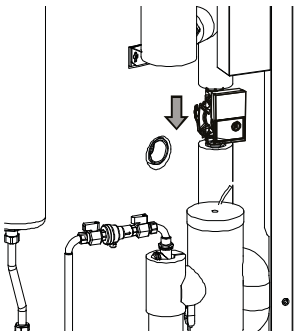
3. Remove the cover from the hydraulic module door to access the connections terminal strip.	**4.** Connect the circulation pump to the **C2 (9 - 10)** terminals of the **X2** output terminal strip (see "Electrical diagram").
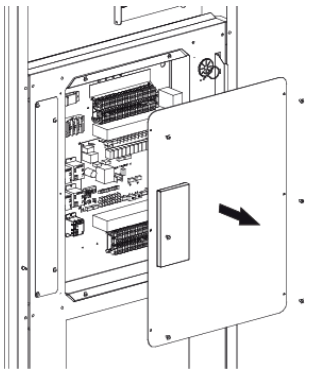	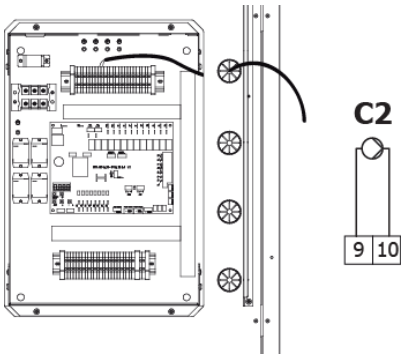 **ATTENTION!** *When finished, place the cover again.*

IMPORTANT: **Whenever any work is done on the electrical installation of the hydraulic module, make sure it is disconnected from the main electrical supply network.**

3.10 Heating expansion vessel (Optional)

The **DUAL CLIMA EC** heat pump is equipped with a standard 5-litre expansion vessel. If more capacity is needed due to the total amount of water in the Heating/Cooling installation, an 8-litre expansion vessel assembly kit (supplied optionally) can be assembled on the **FUSION EC** hydraulic module.

To assemble the vessel correctly on the inside of the **FUSION EC** module, carefully follow the steps shown in the figures below:

1. Remove the plug from the expansion vessel connection.	**2.** Place the expansion vessel under the lower stand, as shown in the figure, with the intake facing forward and upward.
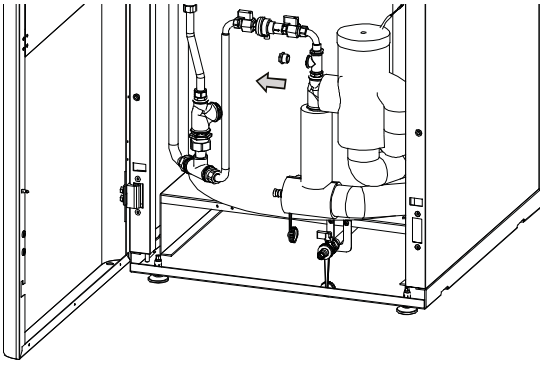	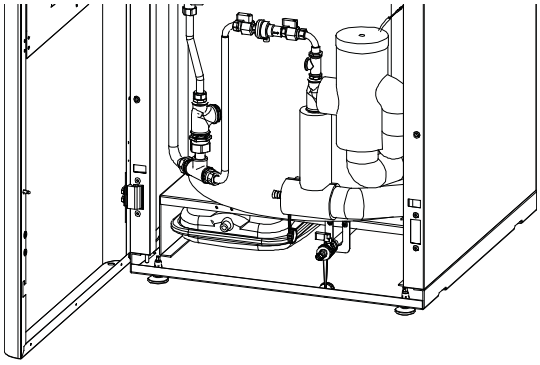
3. Fasten the expansion vessel to the module stand using the support plate and the screws supplied with the kit.	**4.** Connect the expansion vessel to its outlet using the hose supplied with the kit and make sure to seal both ends of the connection properly.
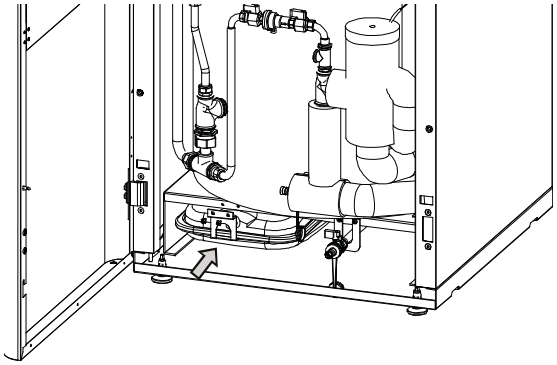	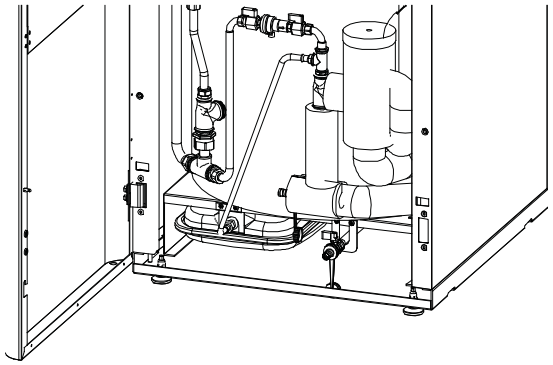

IMPORTANT: Before assembly of the expansion vessel kit inside the module, make sure that the Heating/Cooling installation is completely drained.

3.11 Assembly and connection of optional accessories

In addition to the optional accessories described in the sections above and provided for assembly on the inside of the hydraulic module, the **Easy Connect** electronic control inside the door of the **FUSION EC** module is capable of managing a wide range of other accessories offered by **DOMUSA TEKNIK** (ambient temperature sensor, external sensor, OTC, ambient temperature thermostats, backup pumps, energy meter, buffer tank sensor, etc.). All of these can be assembled in the installation to expand its functionalities (managing a buffer tank, harnessing solar power, OTC operation, etc.).

For proper assembly, connection and start-up of these accessories, carefully read the instructions in the *"Installation and operation instruction manual"* supplied with the **DUAL CLIMA EC** heat pump.

3.12 Filling the installation

The **FUSION EC** hydraulic module has a filling disconnector and pressure gauge that are used to fill the Heating/Cooling installation completely, including the external unit and DHW storage tank heat exchanger. The hydraulic installation also includes air vents and the hydraulic components required for correct filling.

To fill, simply open the filling disconnector valves until the pressure gauge shows a pressure between 1 and 1.5 bar. The heat pump (external unit) is equipped with an automatic air vent at the top of the intake pipe of the heat exchanger (condenser). Open this air vent during filling and wait until water starts flowing out (refer to the Instruction Manual of the **DUAL CLIMA EC** heat pump). The rest of the installation must also be bled using the air vent valvs provided for that purpose. Filling should be slow so the air can be evacuated from the water circuit. Once the installation is full, close the filling disconnector valves.

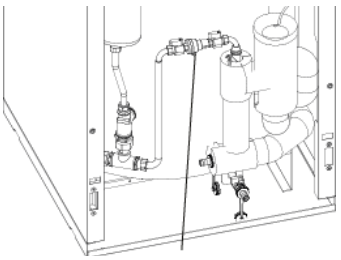

Filling disconnector

IMPORTANT: Starting up the heat pump with no water can cause serious damage to the equipment.

3.13 Draining

The **FUSION EC** hydraulic module is equipped with 2 drain valves, one to drain water from the primary circuit installation (lower valve) and the other to drain the DHW from the storage tank (upper valve). To drain either circuit properly, connect a flexible tube to the corresponding valve and place the other end at a drain. To drain the primary circuit installation, open the air vents in the Heating/Cooling installation to allow air to enter the circuit after releasing the pressure in it. After draining the circuit, close the valve and disconnect the flexible tube.

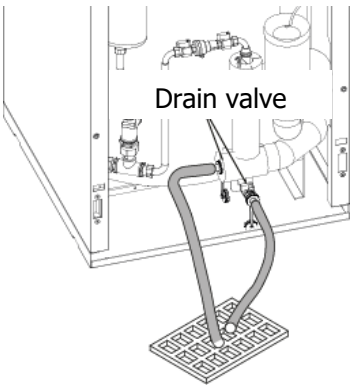

4 OPERATION

The **FUSION EC** hydraulic module accessory is used to manage and control the **DUAL CLIMA EC** heat pump connected to it. It is therefore necessary to assemble and connect the control unit support supplied with the heat pump on the door of the **FUSION EC** module. (Refer to *"Assembly and connection of the control panel"*). To ensure proper set-up and operation of the control unit, carefully read the *"Installation and Operation Instruction Manual"* supplied with the **DUAL CLIMA EC** heat pump.

To take advantage of all the capabilities of the "all-in-one" hydraulic module make sure that the DHW and Heating and/or Cooling services are activated.

The **DUAL CLIMA EC** heat pump is configured in the factory to provide Heating, Cooling and DHW service. If the installation does not have one or more of these services, **THESE SHOULD BE DISABLED** by changing the parameters in the control panel. When a service is disabled, all the operating modes and icons referring to that service will disappear from the control panel.

5 ELECTRICAL DIAGRAM

X1 Input Terminal Strip:

TAC: Heating Mode Thermostat.
TAF: Cooling Mode Thermostat.
Hu: Humidity Sensor.
SG1: Contact 1 for SG Ready Function.
SG2: Contact 2 for SG Ready Function.
A/B: **RS485** Communication with External Unit.
T2: Ambient Temperature Sensor.
T4: OTC External Sensor.
T6: Buffer Tank Sensor.
T12: Not in use.
T13: DHW Temperature Sensor.
HMI: Control panel.

X2 Output Terminal Strip:

C1: Main Backup Circulation Pump.
C2: Heating/Cooling Backup Circulation Pump.
C3: DHW Backup Circulation Pump.
C4: Installation Circulation Pump.
G1: Heating/DHW 3-way valve.
G2: Heat/Cold 3-way valve.
E2: Heating Backup element.
E1: DHW Backup Heating Element.
TA1: Zone 1 Ambient Temperature Sensor.
TA1: Zone 2 Ambient Temperature Sensor.
Z1: Zone 1 Circulation Pump.
Z2: Zone 2 Circulation Pump.

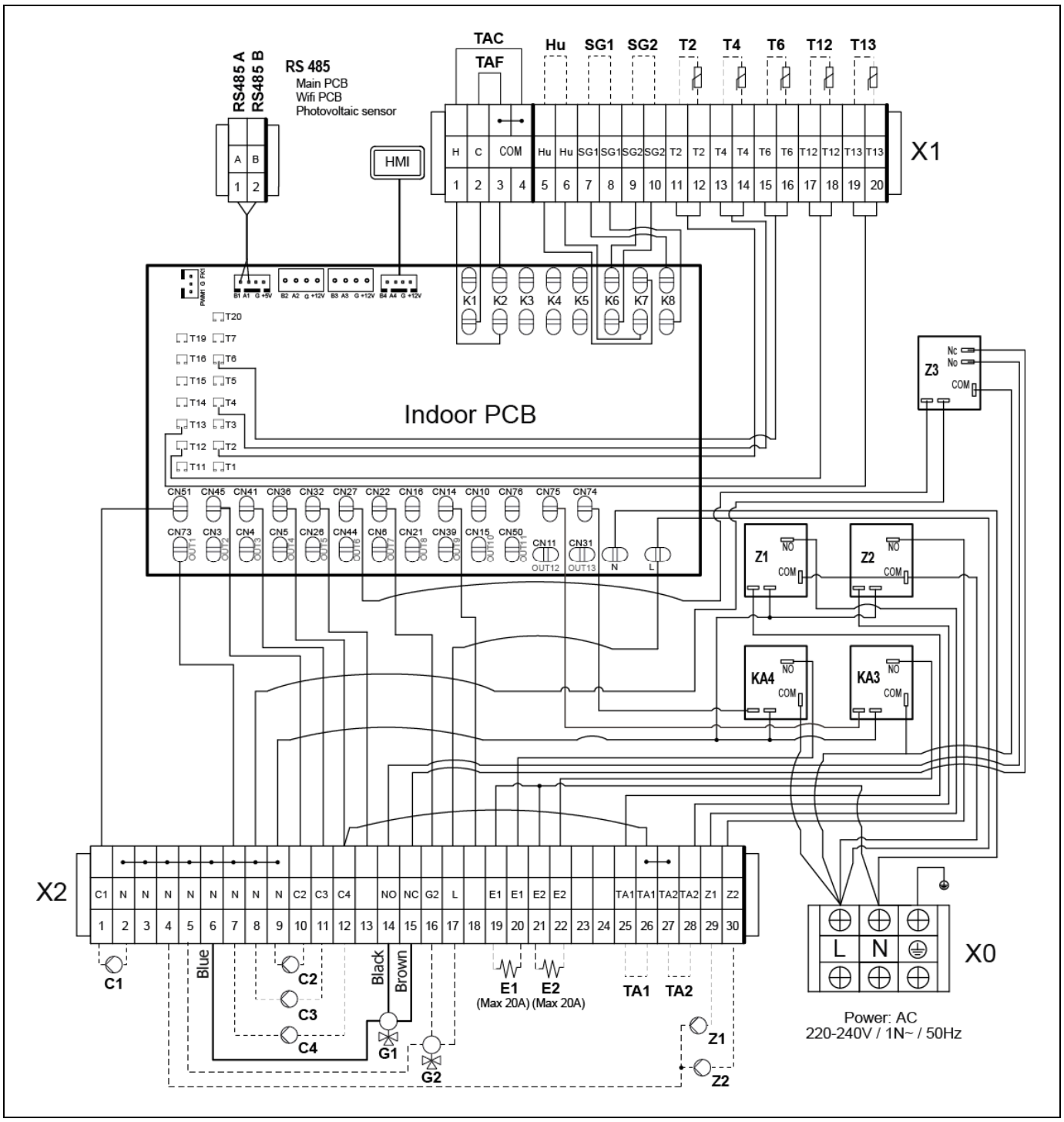
RS485 A
RS485 B
RS 485
Main PCB
Wifi PCB
Photovoltaic sensor
TAC
TAF
Hu
SG1
SG2
T2
T4
T6
T12
T13
HMI
X1
Indoor PCB
K1
K2
K3
K4
K5
K6
K7
K8
Z3
Z1
Z2
KA4
KA3
X2
X0
C1
C2
C3
C4
G1
G2
E1
E2
(Max 20A) (Max 20A)
TA1
TA2
Z1
Z2
Blue
Black
Brown
L
N
Power: AC
220-240V / 1N~ / 50Hz

6 DIMENSIONS

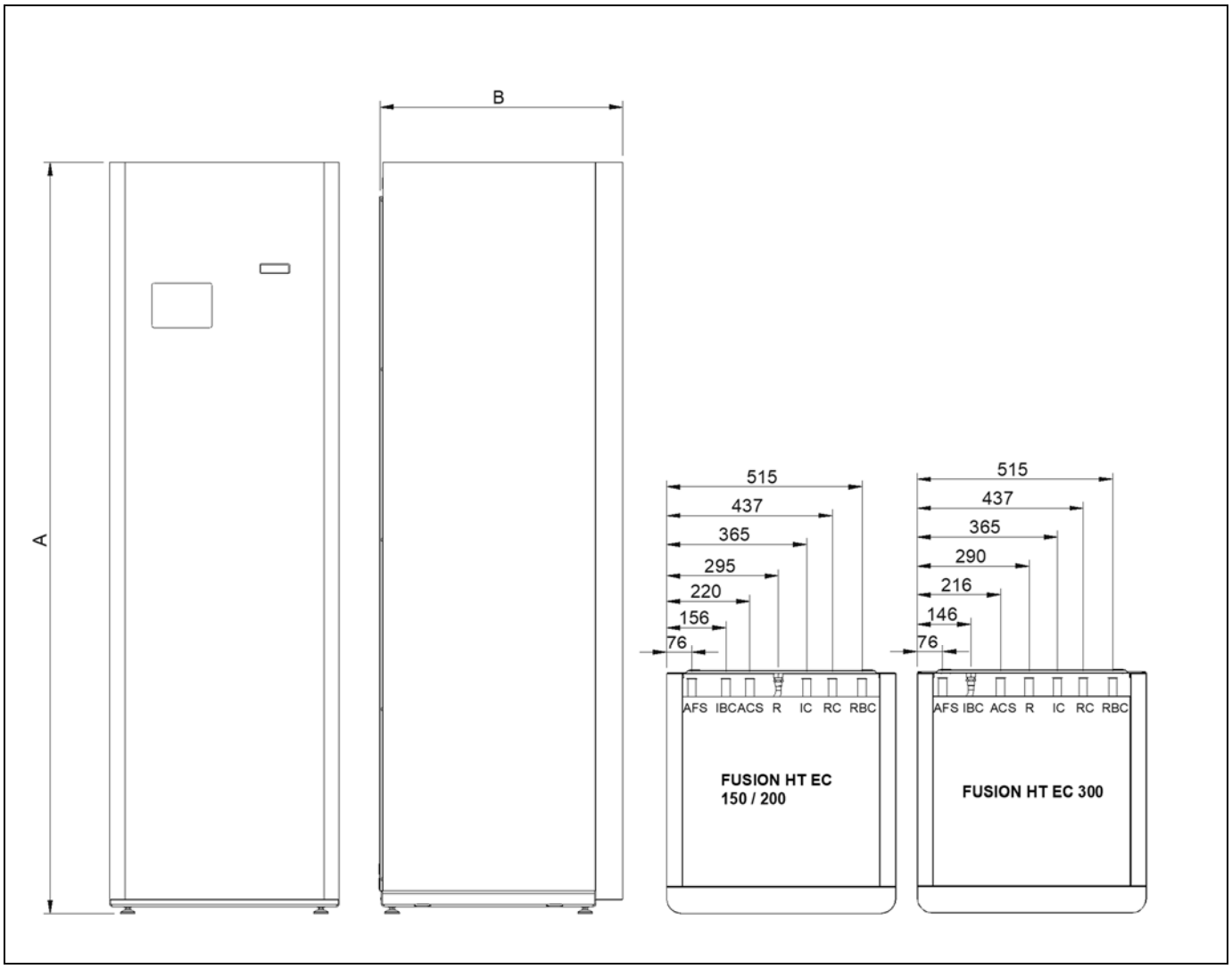

	FUSION EC 150 (mm)	FUSION EC 200 (mm)	FUSION EC 300 (mm)
Total height A	1560	1965	1995
Total depth B	635	635	715

IC: Heating/Cooling outlet, Ø22 (1" M fitting).

RC: Heating/Cooling inlet, Ø22 (1" M fitting).

IBC: Air Source Heat Pump outlet, Ø22 (1" M fitting).

RBC: Air Source Heat Pump inlet, Ø22 (1" M fitting).

ACS: Domestic Hot Water Output, 1/2" M.

AFS: Domestic Cold Water Intake, Ø18 (3/4" M).

R: DHW Recirculation Intake 1/ 2" M.

DOMUSA TEKNIK

POSTAL ADDRESS
Apartado 95
20730 AZPEITIA
Tel.: (+34) 943 813 899

FACTORY AND OFFICES
Bº San Esteban s/n
20737 ERREZIL (Gipuzkoa)
Fax: (+34) 943 815 666

CDOC002984 29/01/25

www.domusateknik.com

DOMUSA TEKNIK reserves the right to make changes to the characteristics of its products without prior notice.