DOMUSA TEKNIK

ACQUA-DUO / ACQUA-TRIO

HYDRAULIC MODULE

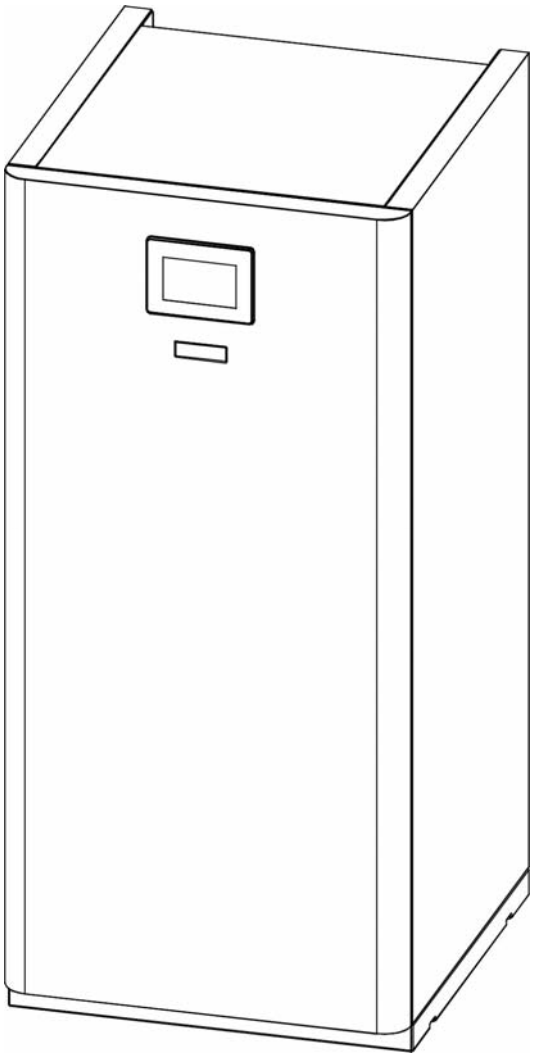

Applus ISO 9001 EC-8890/17 Systems Certification

Applus ISO 14001 MA-3661/17 Systems Certification

EN | INSTALLATION AND OPERATING INSTRUCTIONS

We would like to thank you for choosing a **DOMUSA TEKNIK** heat pump accessory. You have chosen the **ACQUA-DUO/TRIO** model from the **DOMUSA TEKNIK** product range. This is an "all-in-one" hydraulic accumulation module. When it is installed alongside a heat pump from the **DUAL CLIMA HT** product range and with the proper hydraulic installation, it can provide the level of comfort you need in your home.

This document is an integral and essential part of the product and must be given to the user. Please read the warnings and advice contained in this manual carefully as they provide important information for safe installation, operation and maintenance.

This equipment must only be installed by qualified personnel in accordance with current standards and following the manufacturer's instructions.

Both commissioning and all maintenance tasks on the equipment must be performed exclusively by **DOMUSA TEKNIK** Official Technical Assistance Services.

Incorrect installation of this equipment may cause damage to people, animals and property. The manufacturer accepts no liability for such damage.

CONTENTS

1 SAFETY WARNINGS 4
1.1 USE AND INSTALLATION WARNINGS 4
1.2 PERSONAL SAFETY WARNINGS 4
1.3 WATER CHARACTERISTICS 5
2 LIST OF COMPONENTS 6
3 INSTALLATION INSTRUCTIONS 8
3.1 ACCESSORIES SUPPLIED 8
3.2 PLACING AND FASTENING 9
3.3 FASTENING 11
3.4 HYDRAULIC INSTALLATION 14
3.5 PRODUCT INSTALLATIONS 15
3.6 ASSEMBLY OF THE DHW SENSOR. 18
3.7 ASSEMBLING AND CONNECTING THE CONTROL PANEL 23
3.8 ELECTRICAL CONNECTIONS 25
3.9 CONNECTING THE DHW DIVERTER VALVE (G1) 26
3.10 FILLING THE INSTALLATION 27
3.11 DRAINING 27
3.12 DRAINING THE PRIMARY CIRCUIT 27
3.13 DRAINING THE DHW STORAGE TANK 28
3.14 PRECAUTIONS AGAINST FREEZING 28
4 OPERATION 29
5 OPTIONAL ACCESSORIES 30
5.1 ASSEMBLY AND CONNECTION OF A BACKUP ELEMENT KIT FOR DHW (OPTIONAL) 30
5.2 MOUNTING AND CONNECTING THE BACKUP ELEMENT KIT FOR HEATING AND DHW (ONLY OPTIONAL FOR MODELS ACQUA DUO 110, ACQUA DUO ME 110 AND ACQUA DUO SE 170) 33
5.3 ELECTRICAL CONNECTIONS DIAGRAM OF THE HEATING AND DHW BACKUP ELEMENT KIT BOX (ONLY OPTIONAL FOR MODELS ACQUA DUO 110, ACQUA DUO ME 110 AND ACQUA DUO SE 170). 36
5.4 ASSEMBLY AND CONNECTION OF A BACKUP PUMP (OPTIONAL) 37
6 ELECTRICAL DIAGRAM 40
7 DIMENSIONS AND ASSEMBLY 42
8 TECHNICAL CHARACTERISTICS 45

1 SAFETY WARNINGS

1.1 Use and installation warnings

The **ACQUA DUO/TRIO** module must be installed by technicians authorised by the Ministry of Industry and in compliance with current applicable laws and regulations. Please follow these recommendations strictly, given the importance of the items they refer to.

Read this instruction manual carefully and keep it safe where it can easily be located. **DOMUSA TEKNIK** shall not be liable for any damage caused by not following these instructions.

The **ACQUA DUO/TRIO** accumulation module can only be installed in combination with a heat pump from the **DOMUSA TEKNIK DUAL CLIMA HT** product range.

ACQUA TRIO modules can be used in both heating and cooling installations, as well as domestic hot water installations. **ACQUA DUO** modules can only be used in heating and domestic hot water installations.

This appliance must only be used for its intended purpose. Any other use should be considered inappropriate and therefore dangerous. Under no circumstances shall the manufacturer be held liable for damage caused by improper, incorrect or unreasonable use.

After removing all packaging, check that the contents are intact. If in doubt, do not use the equipment and contact the supplier. The packaging must be kept out of the reach of children as it is potentially hazardous.

Inappropriate installation or placement of the equipment or accessories may cause electric shock, short-circuits, leaks, fires or other damage to the equipment. Use only optional accessories or equipment manufactured by **DOMUSA TEKNIK** and specifically designed to work with the products presented in this manual. Do not make any changes to, replace or disconnect any safety or control devices without previously consulting with the manufacturer or the **DOMUSA TEKNIK** Official Technical Assistance Service.

When it is decided not to use the equipment any more, all parts that could potentially be a hazard must be deactivated.

1.2 Personal safety warnings

Always wear proper personal protection equipment (safety gloves, safety goggles, etc.) when performing installation and/or maintenance tasks with this equipment.

Do not touch any switches with wet hands. Touching a switch with wet hands can trigger electrical discharges. Disconnect the electrical power supply completely before working on electric components.

Do not touch water pipes or internal parts while or immediately after the equipment is running. The internal pipes or parts may be very hot or very cold, depending on how the unit is being used.

Hands can suffer heat or cold burns if they touch internal pipes or parts at inappropriate times. To prevent injuries, wait until the internal pipes or parts return to their normal temperature; otherwise, use appropriate safety gloves to handle them.

1.3 Water characteristics

The water must be in accordance with Directive EU 2020/2184 on the quality of water intended for human consumption. Special attention must be paid to the following parameters:

- Maximum chloride concentration: 250 mg / l.
- Maximum sulphate concentration: 250 mg / l.
- Maximum concentration of chlorides and sulphates: 300 mg / l.
- Maximum conductivity: 600 µS / cm.

When the chlorine concentration in the Domestic Water exceeds 250 mg/dm3, it is recommended that anti-corrosion protection should be applied to the inside of the inter-accumulator so as to avoid its premature deterioration. As an option **DOMUSA TEKNIK** supplies electronic cathodic protection that is suitable for the **ACQUA** range. To install it, read carefully the assembly instructions that are provided with the same.

2 LIST OF COMPONENTS

ACQUA-DUO SE 170

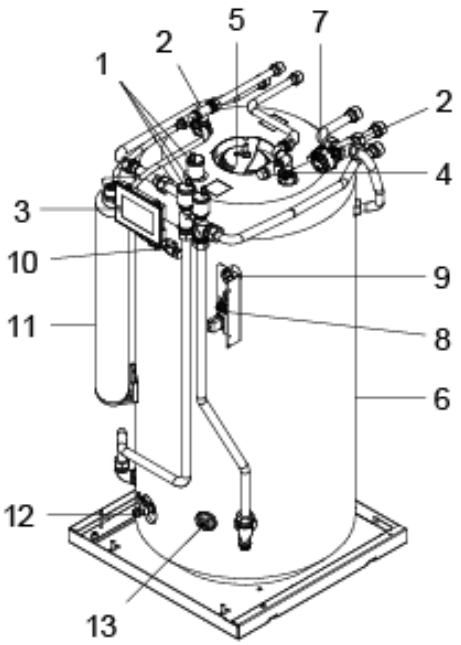

ACQUA-TRIO SE 170

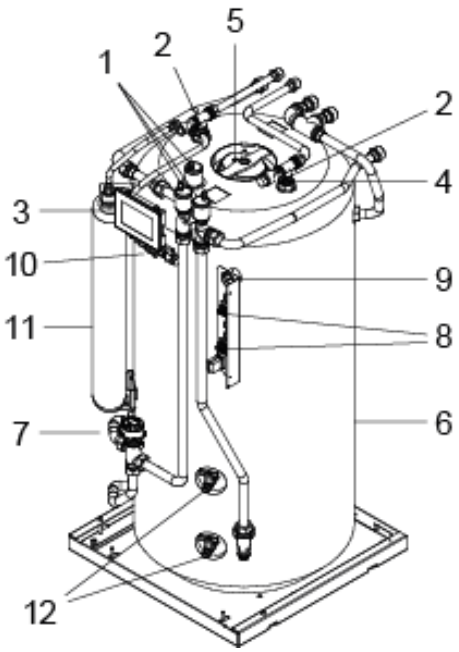

ACQUA-DUO ME 110

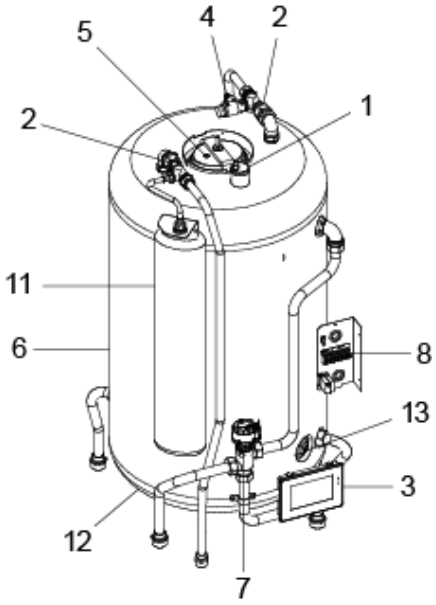

ACQUA-TRIO ME 110

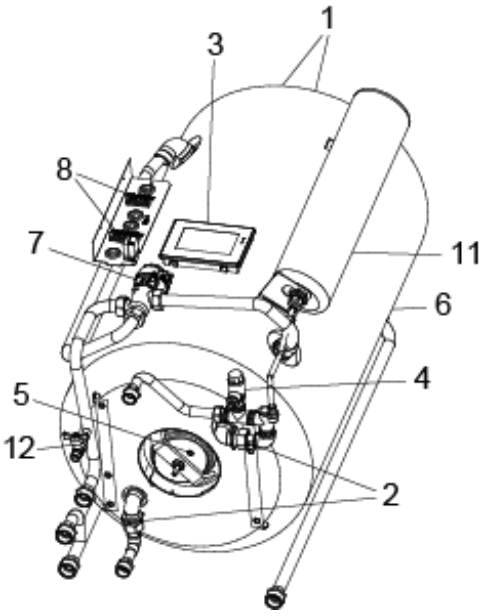

1. Air vent.
2. Dielectric sleeve.
3. Control panel.
4. DHW safety valve.
5. Sensor immersion sleeve for DHW.
6. Storage tank.
7. Motorised 3-way diverter valve.
8. Connections strip.
9. Pressure gauge.
10. Filling disconnector.
11. DHW expansion vessel.
12. Drain valve.
13. Optional heating element connection.

ACQUA-DUO / TRIO 110

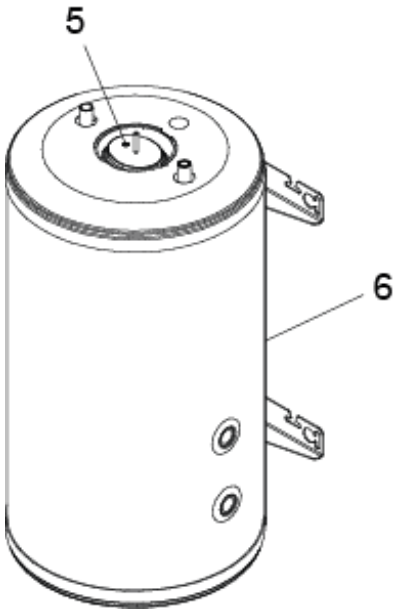

1. Air vent.
2. Dielectric sleeve.
3. Control panel.
4. DHW safety valve.
5. Sensor immersion sleeve for DHW.
6. Storage tank.
7. Motorised 3-way diverter valve.
8. Connections strip.
9. Pressure gauge.
10. Filling disconnector.
11. DHW expansion vessel.
12. Drain valve.
13. Optional heating element connection.

3 INSTALLATION INSTRUCTIONS

The **ACQUA DUO/TRIO** hydraulic module must be installed in combination with a heat pump from the **DOMUSA TEKNIK DUAL CLIMA HT** product range. For this purpose, the hydraulic and electrical inputs/outputs of both equipment appliances must be interconnected. This sections presents a detailed description of the steps required for these interconnections.

To guarantee proper operation of the equipment, the installation must be carried out by a qualified professional in compliance with applicable official regulations.

3.1 Accessories supplied

The following accessories are supplied with the **ACQUA DUO/TRIO** hydraulic module, in a bag, along with the documentation. Before installing the equipment, ensure that you have received these and they are in good condition.

Documentation: The bag containing the documentation can be found inside the machine once the front is opened; this includes all the manuals and documents needed to install and operate the equipment.

Filter: Water filter for the installation. To ensure proper installation, carefully read the section titled *"Hydraulic installation"*. The water filter is not supplied with the **ACQUA DUO 110/TRIO 110** models.

Filling disconnector: The filling disconnector is standard equipment, except in the **ACQUA DUO ME 110/TRIO ME 110** models, where it is supplied in the bag of accessories, along with the documentation. The filling disconnector is not supplied with the **ACQUA DUO 110/TRIO 110** models.

Strap: Strap to hold the DHW sensor of the heat pump inside the sensor immersion sleeve of the storage tank. For proper installation, read the section titled *"Assembly of the DHW sensor"* carefully.

Pressure gauge: A pressure gauge to measure the water circuit pressure in the heat pump. The pressure gauge is only included in the documents bag supplied with models **ACQUA DUO ME 110/TRIO ME 110**.

Dielectric sleeve: The dielectric sleeve is standard equipment, except in the **ACQUA DUO ME 110/TRIO ME 110** models, where it is supplied in the documents bag.

3.2 Placing and fastening

Maintenance, internal cleaning and, if necessary, replacement of the heating element of **ACQUA** wall-mounted hydraulic modules will require clearance under the water intake and outlet pipes. Likewise, **ACQUA** floor-mounted hydraulic modules will require clearance between the top of the equipment and the ceiling or any fixed object for the same reasons.

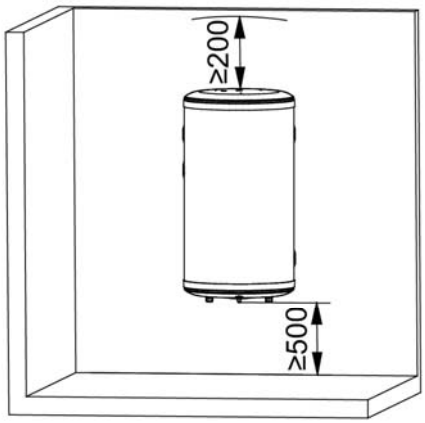

ACQUA TRIO 110

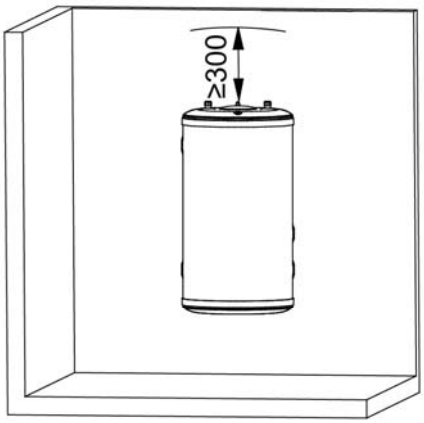

ACQUA DUO 110

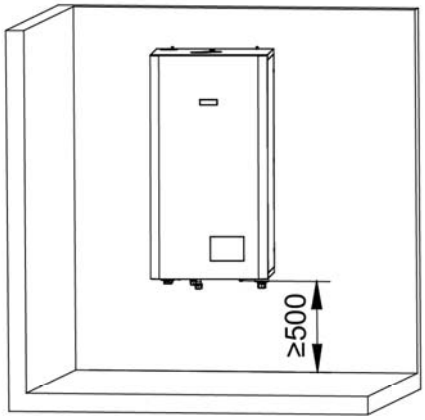

ACQUA TRIO ME 110

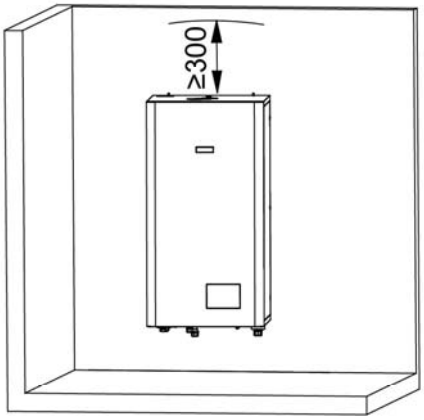

ACQUA DUO ME 110

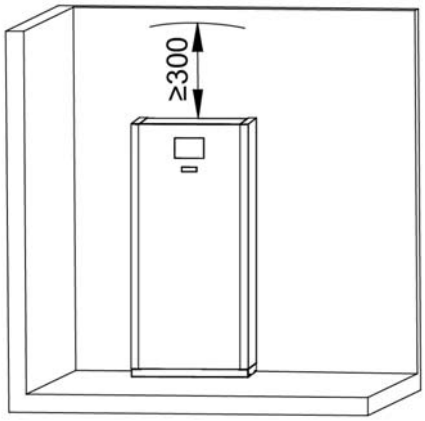

ACQUA TRIO SE 170

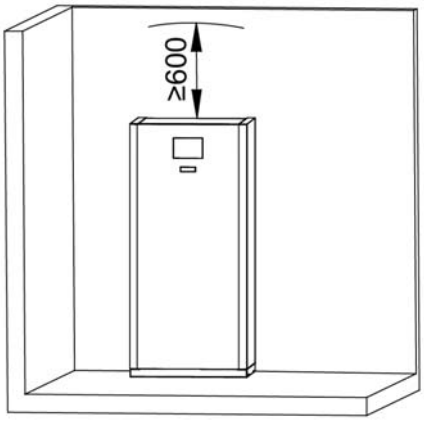

ACQUA DUO SE 170

The **ACQUA DUO 110 and ACQUA TRIO 110** wall-mounted modules require the hydraulic connections to be made as shown in the following images:

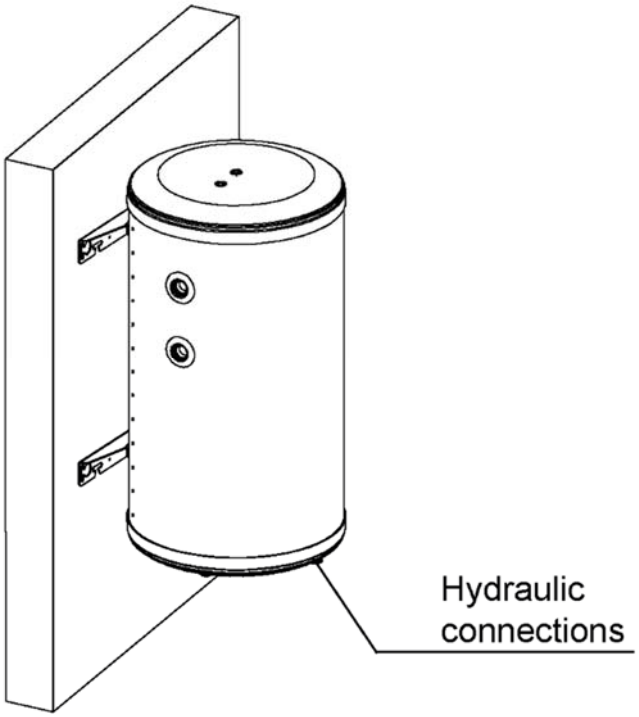

IMPORTANT: The **ACQUA TRIO 110** wall-mounted module must be mounted with the hydraulic connections facing down.

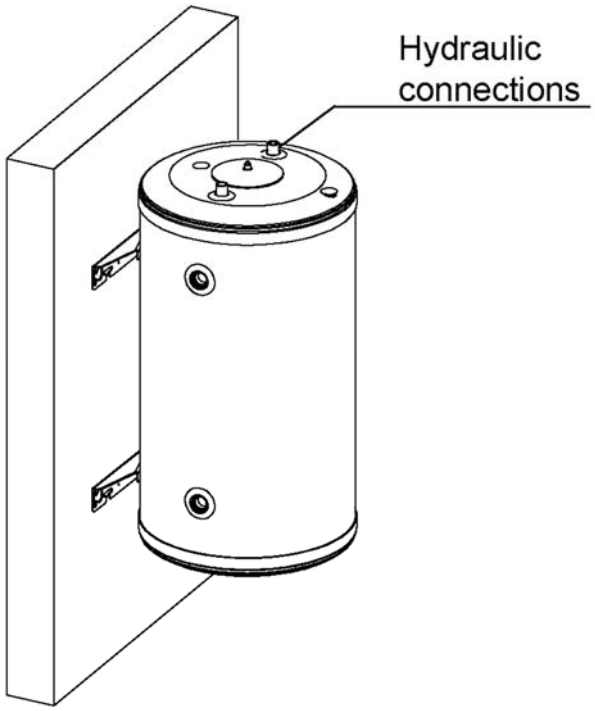

IMPORTANT: The **ACQUA DUO 110** wall-mounted module must be mounted with the hydraulic connections facing up.

3.3 Fastening

Brackets are supplied to fasten the **ACQUA DUO/TRIO** modules to the wall. Follow the instructions below to install the equipment:

1.- Drill holes in the wall at the points required for the bracket and place the appropriate fasteners, depending on the weight of the storage tank and the type of wall (*see the table of wall-mounted module weights*).

2.- Fasten the bracket to the wall.

3.- Hang the hydraulic module on the bracket

***NOTE: The fastening elements are not included.**

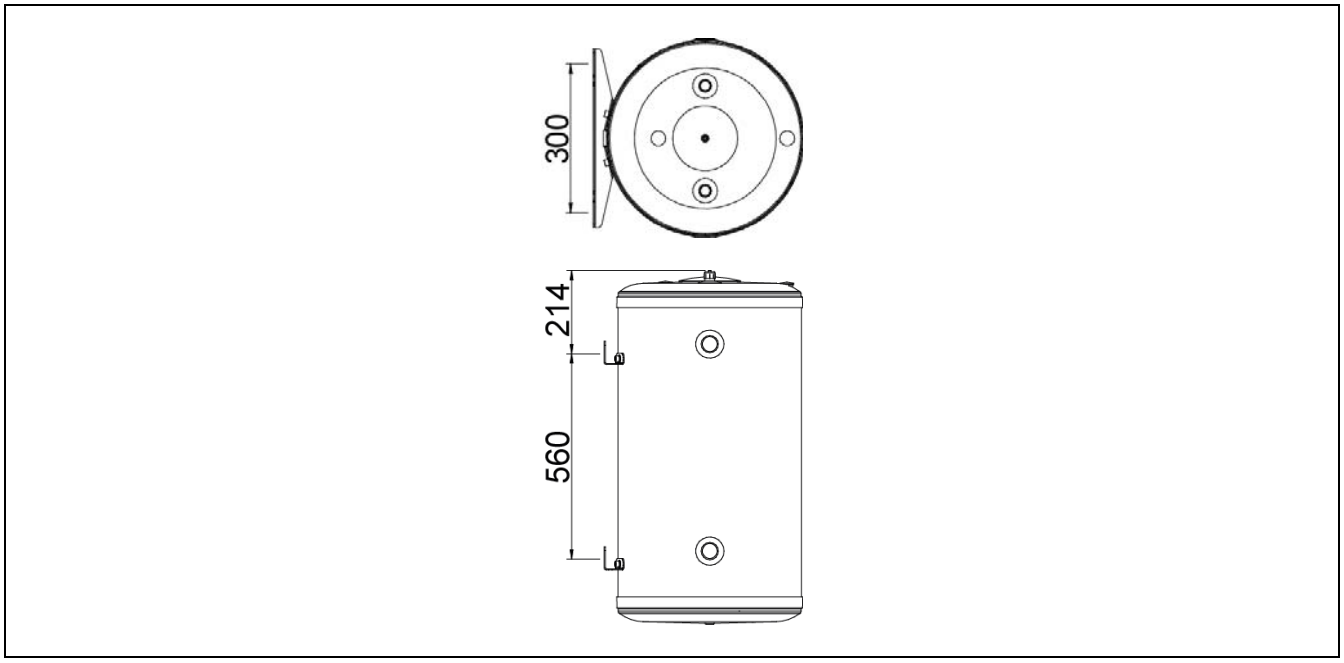

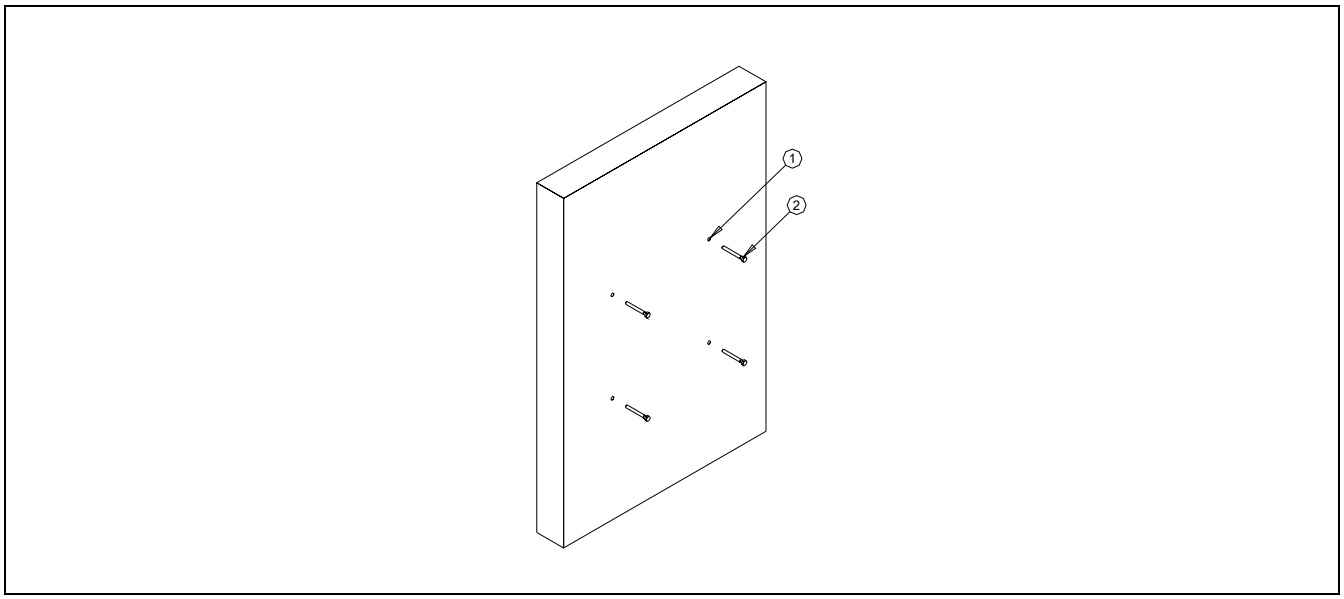

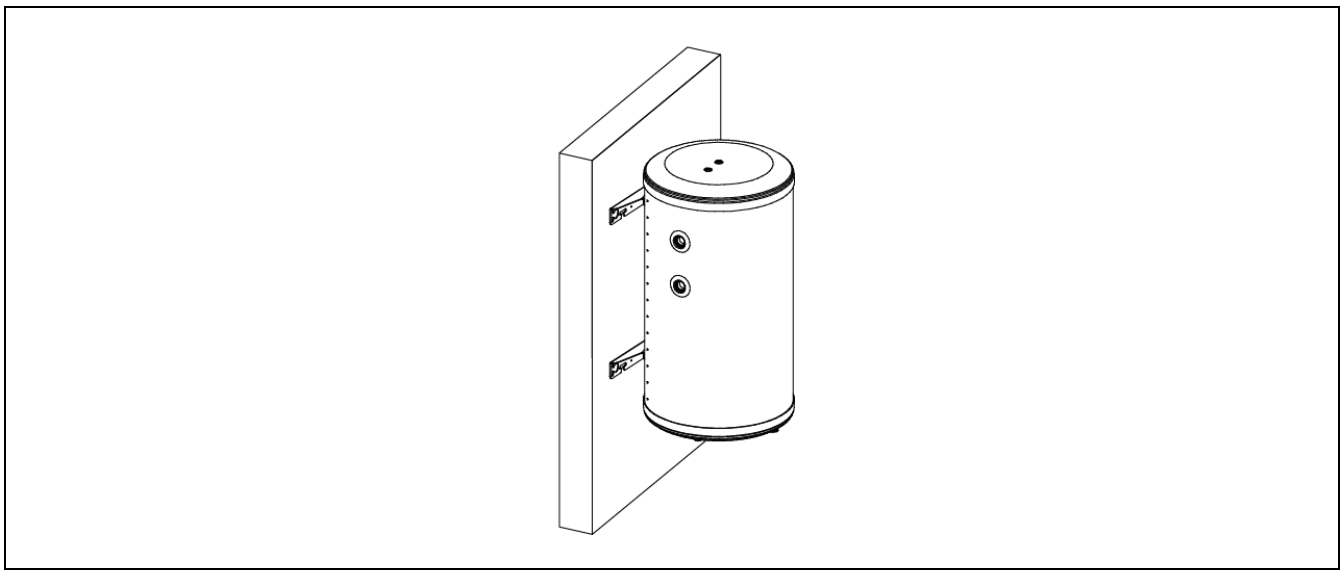

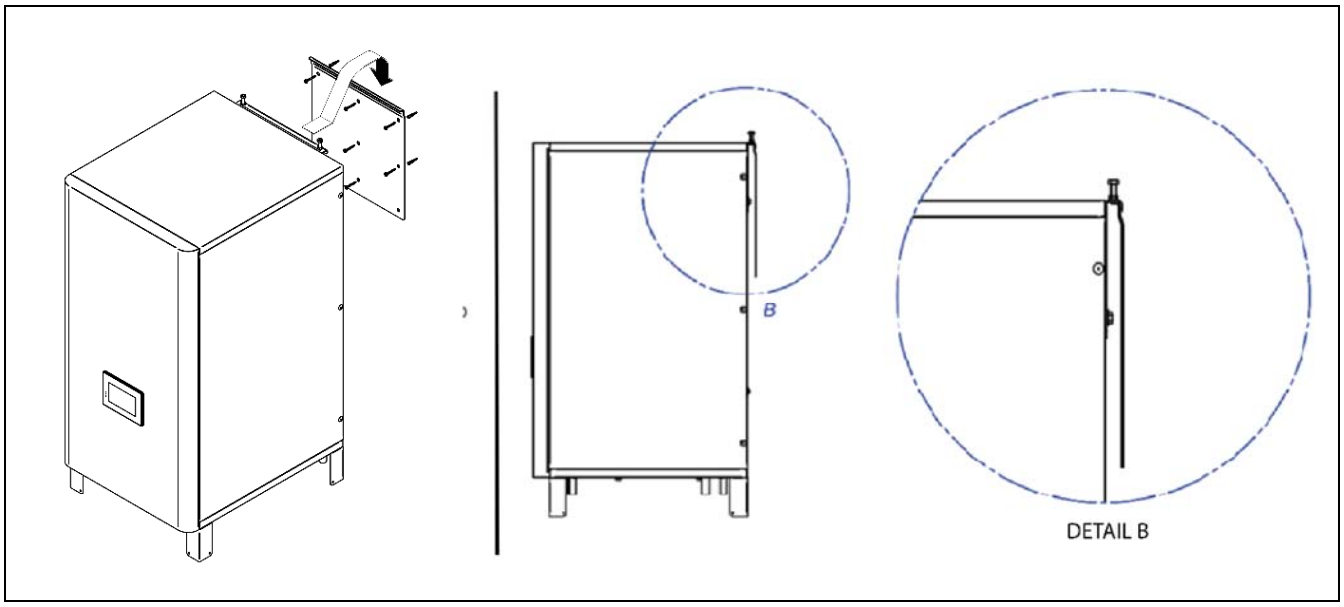

TABLE OF WALL-MOUNTED MODULE WEIGHTS	
MODEL	WEIGHT WHEN FULL
ACQUA DUO ME 110 /TRIO ME 110	220 Kg
ACQUA DUO 110 /TRIO	175 Kg

There are several mounting options, depending on the type of wall:

- **Thin walls (plasterboard wall)**

  Threaded rods measuring ø 10 mm passing through the wall and joined by sidings or plates.

- **Hard, thick walls (concrete, stone, brick)**

  Seal the ø 10 mm bolts or drill holes to place ø 10 mm plugs adapted to the wall.

After mounting the hydraulic module on the wall and connecting it to the mains water supply, fill it with water and make sure that the wall withstands the weight with ease.

ATTENTION:

- **Bear in mind the weight of the module full of water when choosing where to place it.**
- **Use appropriate handling items.**
- **Take the necessary load handling protection measures.**
- **Install the water tank in a place protected from freezing.**
- **If the tank is installed outside the living quarters (cellar, garage, etc.), the pipes should be insulated.**
- **Place a water tray under the tank when it is mounted over a false ceiling, in an attic or over living quarters.**
- **A drain pipe must be connected to the drain at an angle and protected from freezing.**
- **Do not install outdoors.**

NOTE: After mounting the module on the wall, the mounting protection legs can be removed.

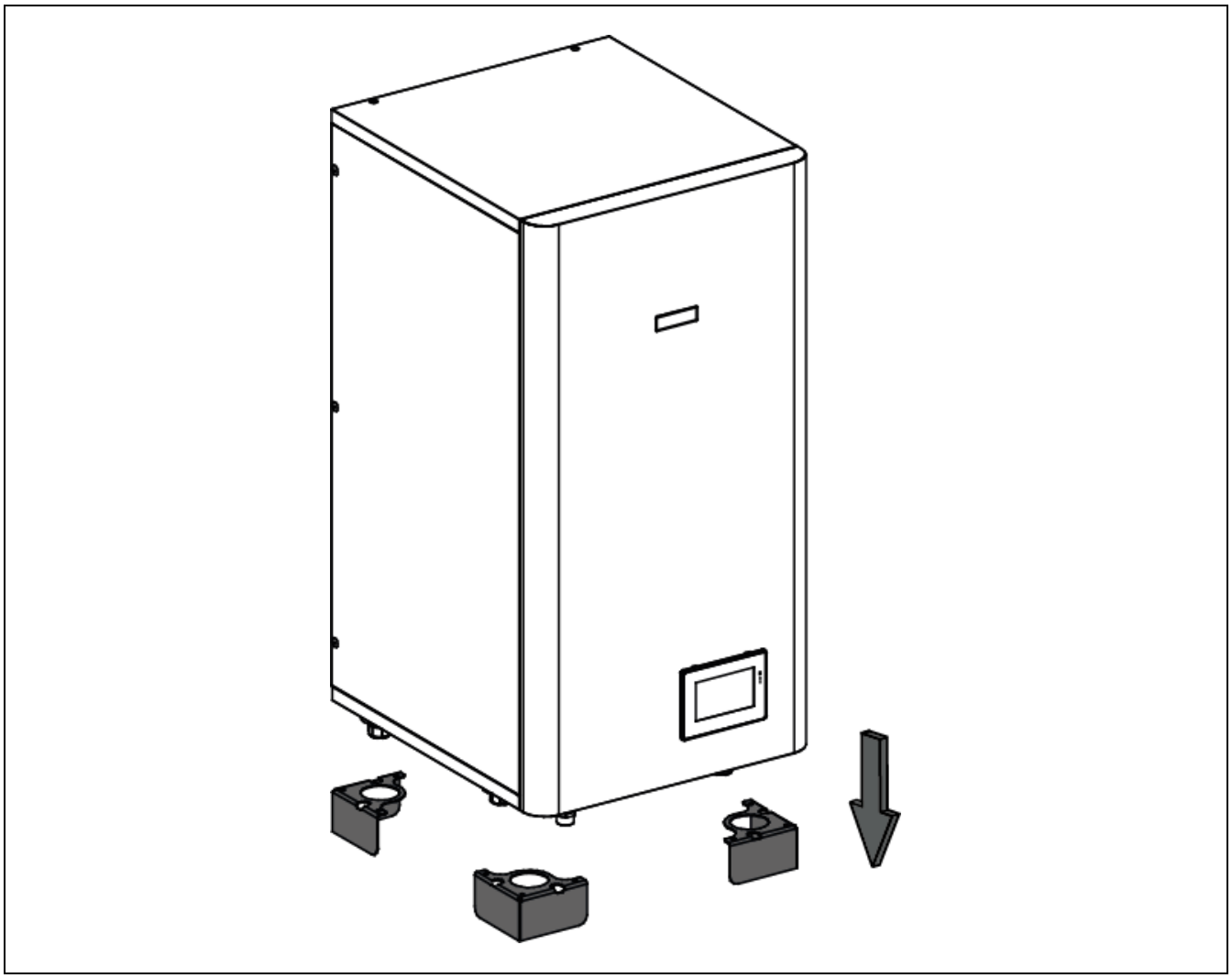

3.4 Hydraulic installation

The hydraulics must be installed by qualified personnel according to current installation regulations and taking into account the following recommendations:

- The hydraulic connections between the **ACQUA DUO/TRIO** module and the **DUAL CLIMA HT** heat pump can be made by using 2 properly insulated pipes to connect the **IBC** and **RBC** connections of the module (see *"Sketch and Dimensions"*) with the flow and return connections of the heat pump, respectively.
- All water circuit pipes **MUST** be insulated to prevent condensation during cold mode operation and loss of cooling and heating capacity, as well as to prevent the outdoor pipes from freezing during the winter. The pipe insulation should have a minimum thickness of 19 mm (0.039 W/mK) and be closed cell insulation or vapour barrier insulation. In outdoor areas, the insulation should be protected from the deteriorating effects of the sun.
- A **water filter** should be installed in the heat pump water circuit to prevent clogging or narrowing caused by dirt in the installation. The filter **MUST BE** installed in the equipment's return line before filling the installation with water to prevent dirty water from entering the heat exchanger (condenser). **It is recommended to place this filter between two shut-off valves so cleaning can be performed without having to drain the installation completely**. The filter should be appropriate for the specific characteristics of each installation (water pipe types and materials, type of water used, volume of water in the installation and so on). In new installations, it is recommended to examine the water filter during the first few months after commissioning the equipment; nonetheless, it must be examined and cleaned if necessary at least once a year.
- Shut-off valves should be installed between the installation and the hydraulic module in order to simplify maintenance tasks. **In wall-mounted models, it is recommended to install shut-off valves at the intake and outlet of DHW to drain the storage tank when maintenance is required.**
- Air vents and other devices should be placed for proper removal of air from the circuit during the water filling stage.
- Proper operation of the **ACQUA DUO/TRIO** hydraulic module requires that it be installed in combination with a **DUAL CLIMA HT** heat pump; therefore, please follow the instructions included in the heat pump installation manual, in addition to the recommendations listed above.
- The filling disconnector is needed to fill the primary circuit. Make the connections between the primary circuit and a domestic hot water point to the filling disconnector can be used to fill the circuit.

3.5 Product installations

ACQUA DUO ME 110

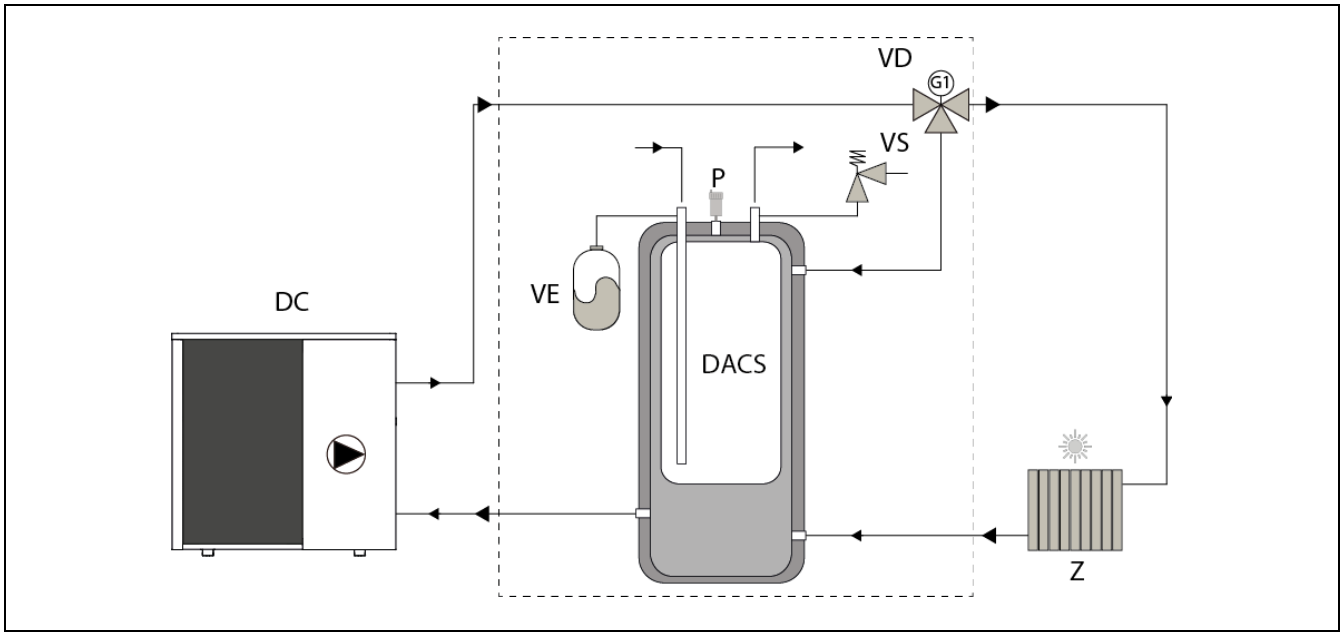

ACQUA TRIO ME 110

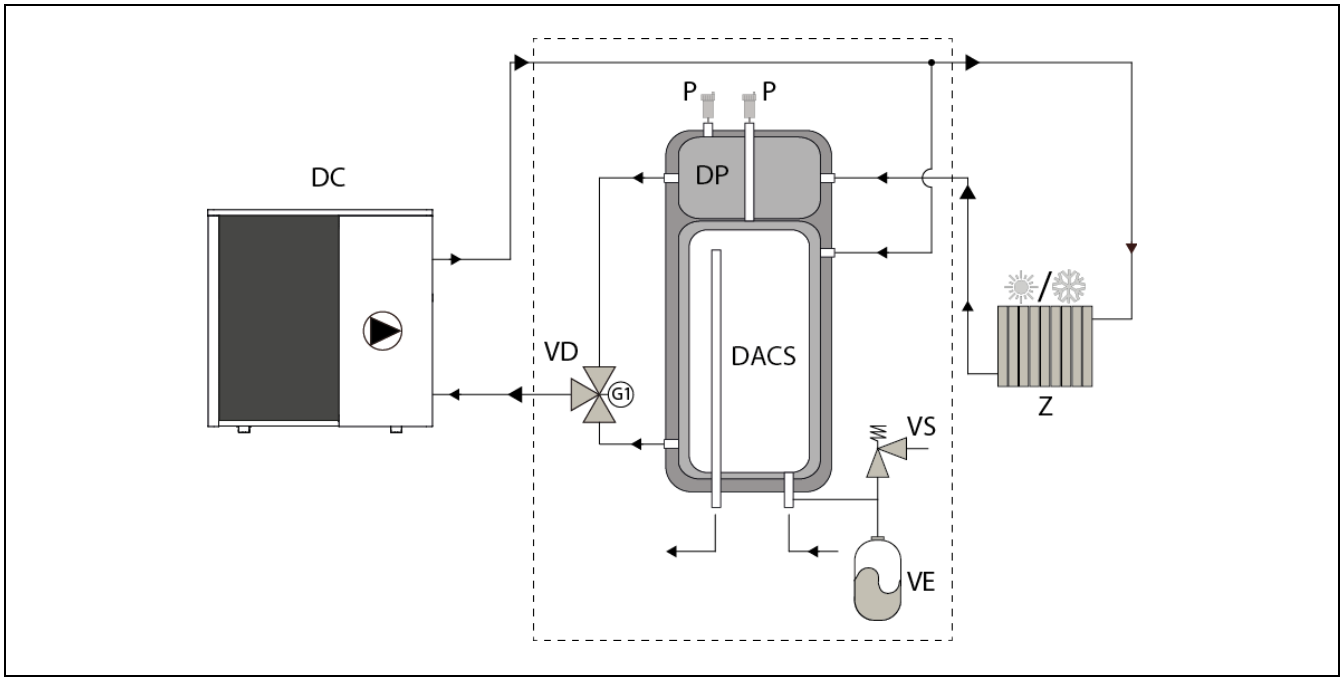

ACQUA DUO SE 170

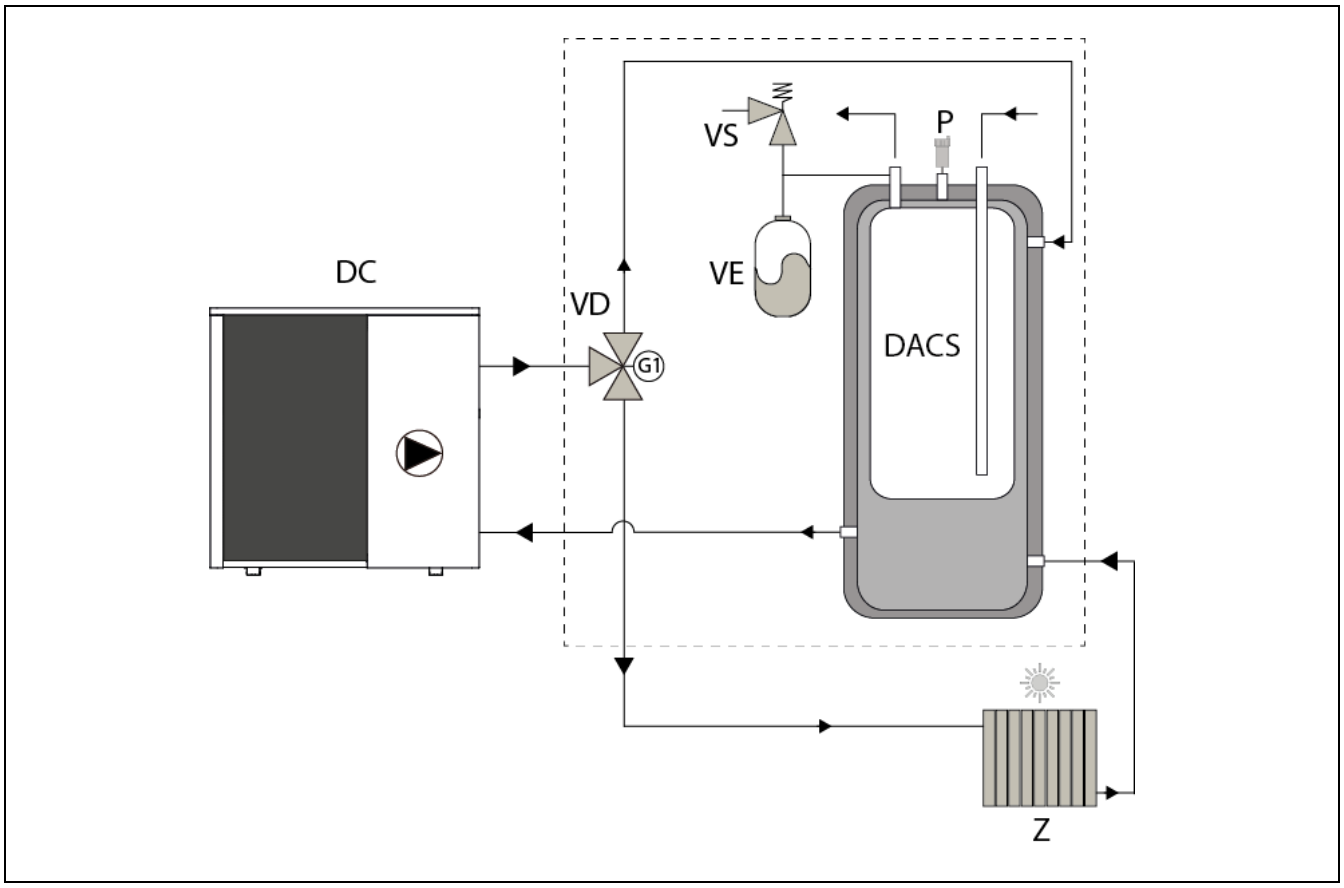

ACQUA TRIO SE 170

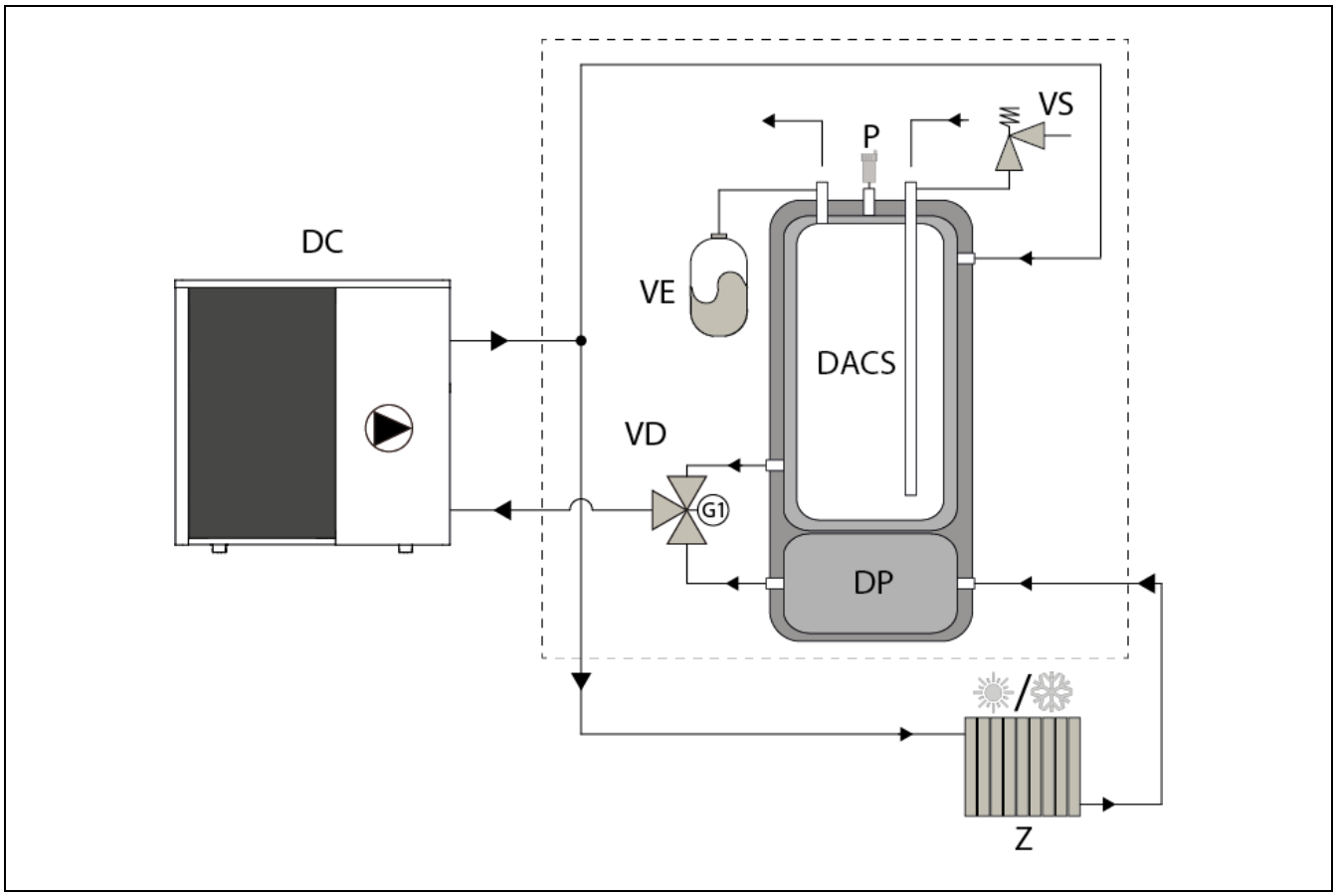

ACQUA DUO 110

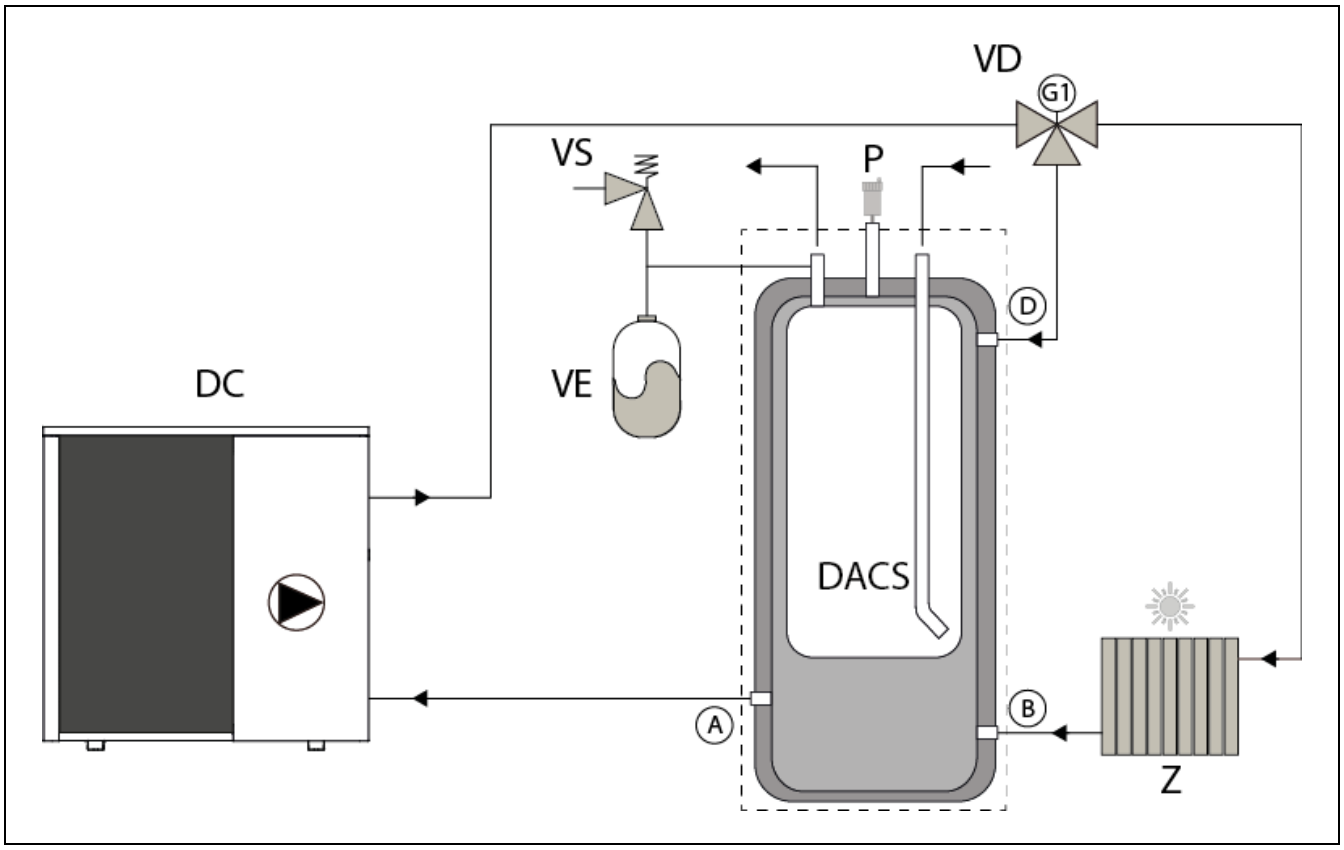

ACQUA TRIO 110

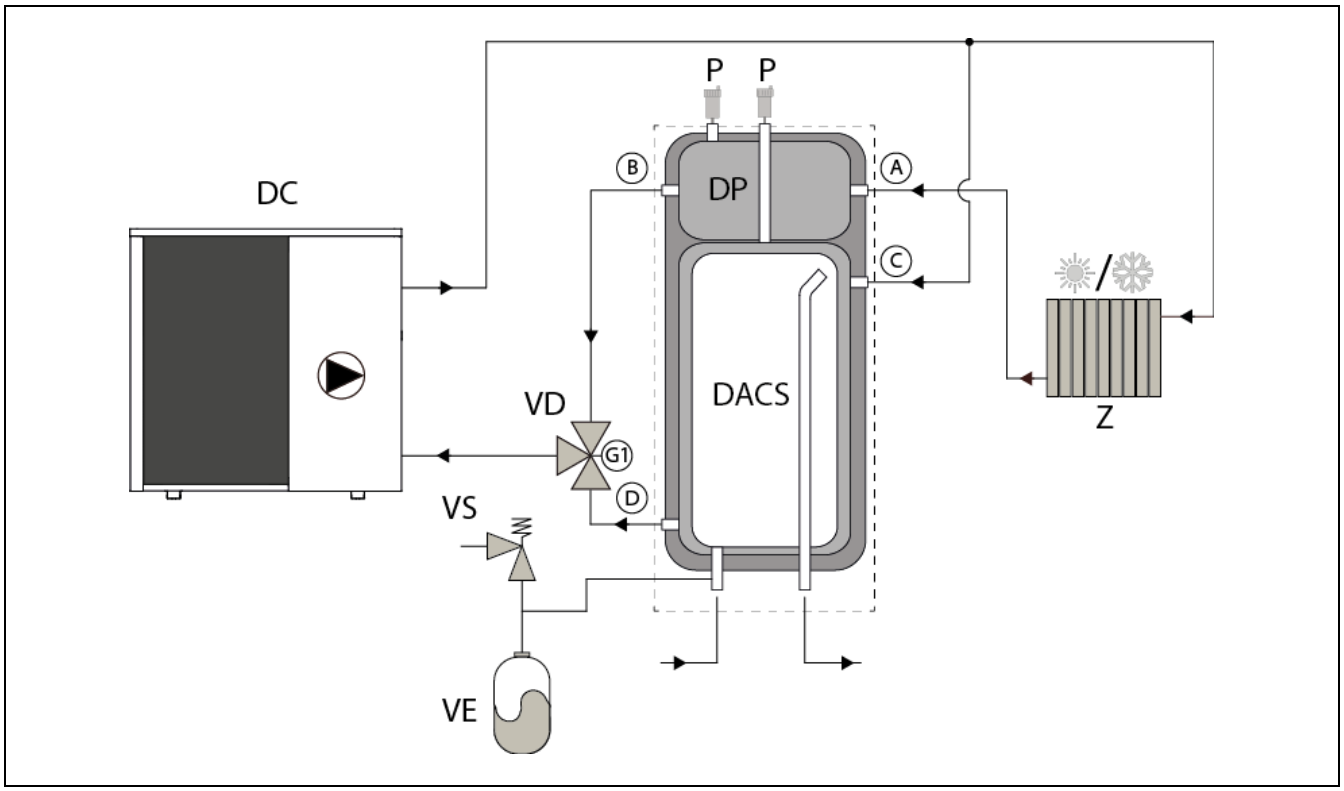

VD: DHW heating/cooling inverter valve.

Z: Heating/Cooling transmitter.

DACS: DHW storage tank.

DP: Primary circuit "buffer" storage tank.

DC: DUAL CLIMA HT heat pump.

VE: DHW expansion vessel.

VS: DHW safety valve.

P: Automatic air vent.

A: Buffer connection.

B: Buffer connection.

D: Primary circuit storage tank connection.

C: Primary circuit storage tank connection.

3.6 Assembly of the DHW sensor.

To ensure proper operation of the **ACQUA DUO/TRIO** hydraulic module, insert the DHW sensor supplied with the **DUAL CLIMA HT** heat pump into the immersion sleeve provided in the module storage tank. The sensor is located inside the heat pump. Guide the sensor to the location of the **ACQUA DUO/TRIO** module and follow the instructions below carefully to insert it in the sensor immersion sleeve provided for it:

1. Remove the cover of the module storage tank.
2. Guide the DHW temperature sensor ("**DHW TANK SENSOR**") through the rubber feedthrough at the rear or bottom (depending on the model).
3. Insert the sensor into the immersion sleeve provided on the cover of the storage tank. Make sure to insert the sensor until it comes into contact with the bottom of the immersion sleeve. Insert the band (supplied in the bag of accessories) into the opening in the immersion sleeve to secure the sensor cable.
4. Assemble the cover on the module storage tank.
5. To connect the electrical cable of the sensor, remove the heating element that is supplied and connected to the **T13** terminals **(19 and 20)** of the input strip of the **DUAL CLIMA HT** heat pump and replace it with the DWH sensor.

ACQUA TRIO 110

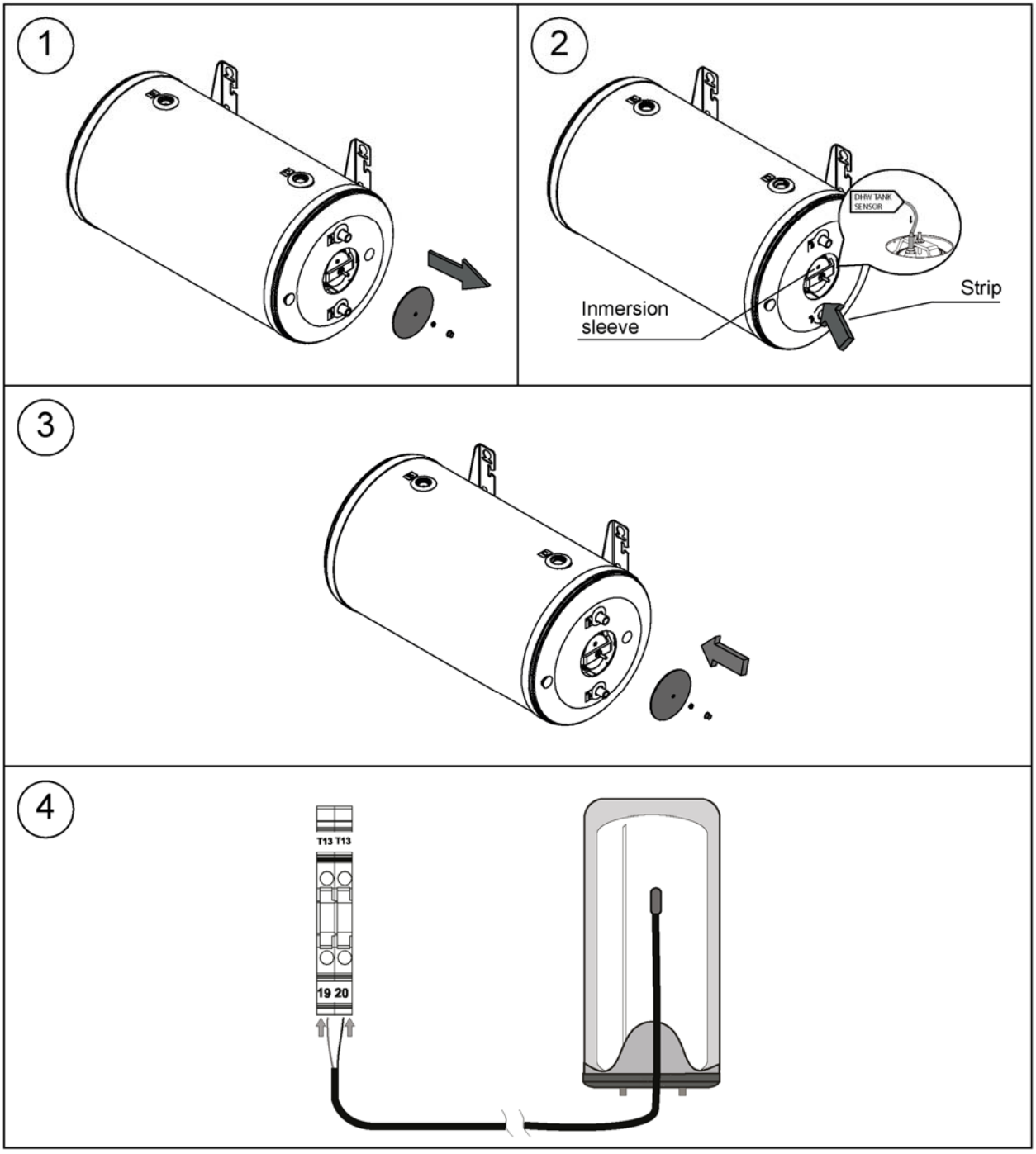

ACQUA DUO ME 110

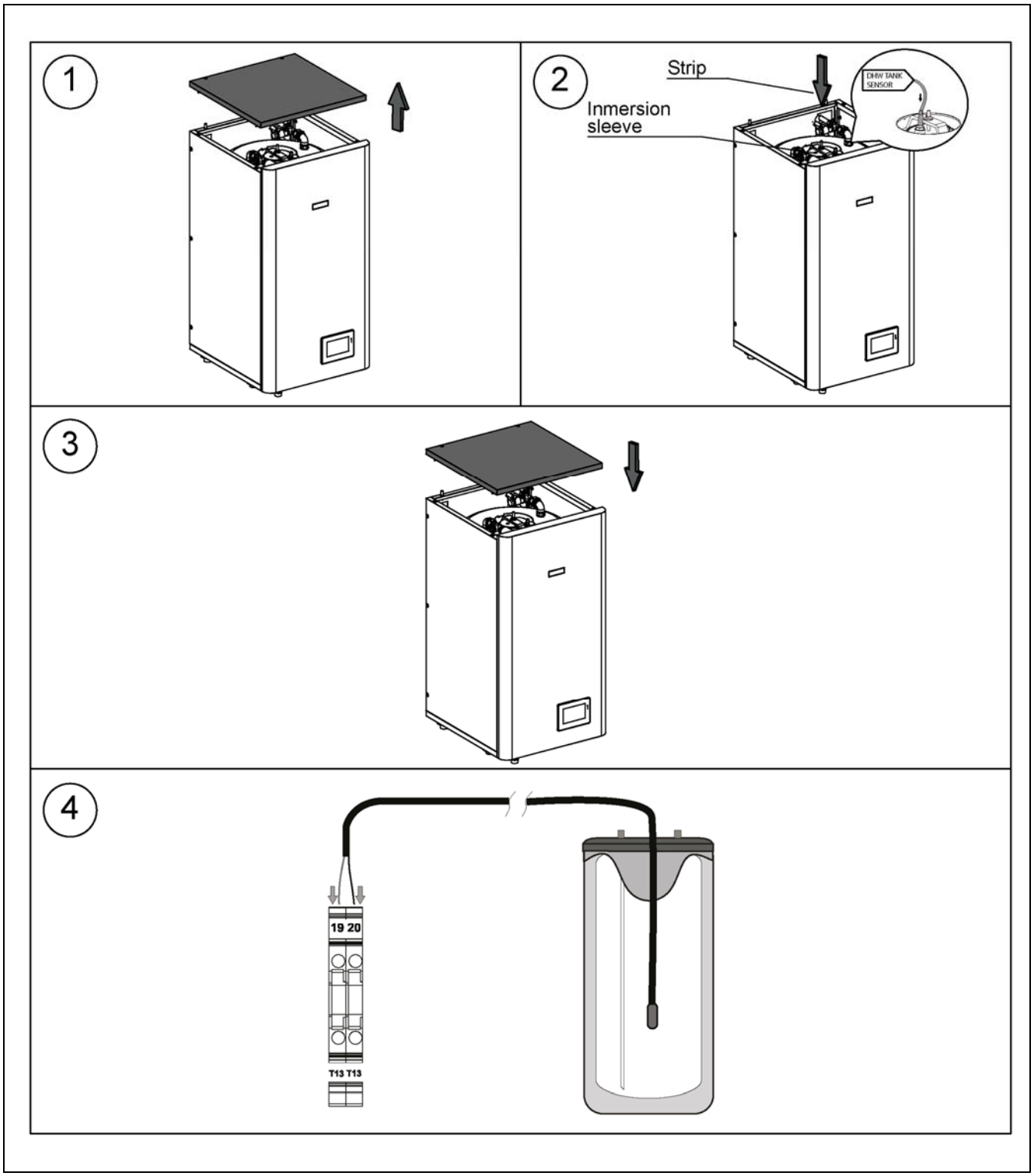

ACQUA TRIO ME 110

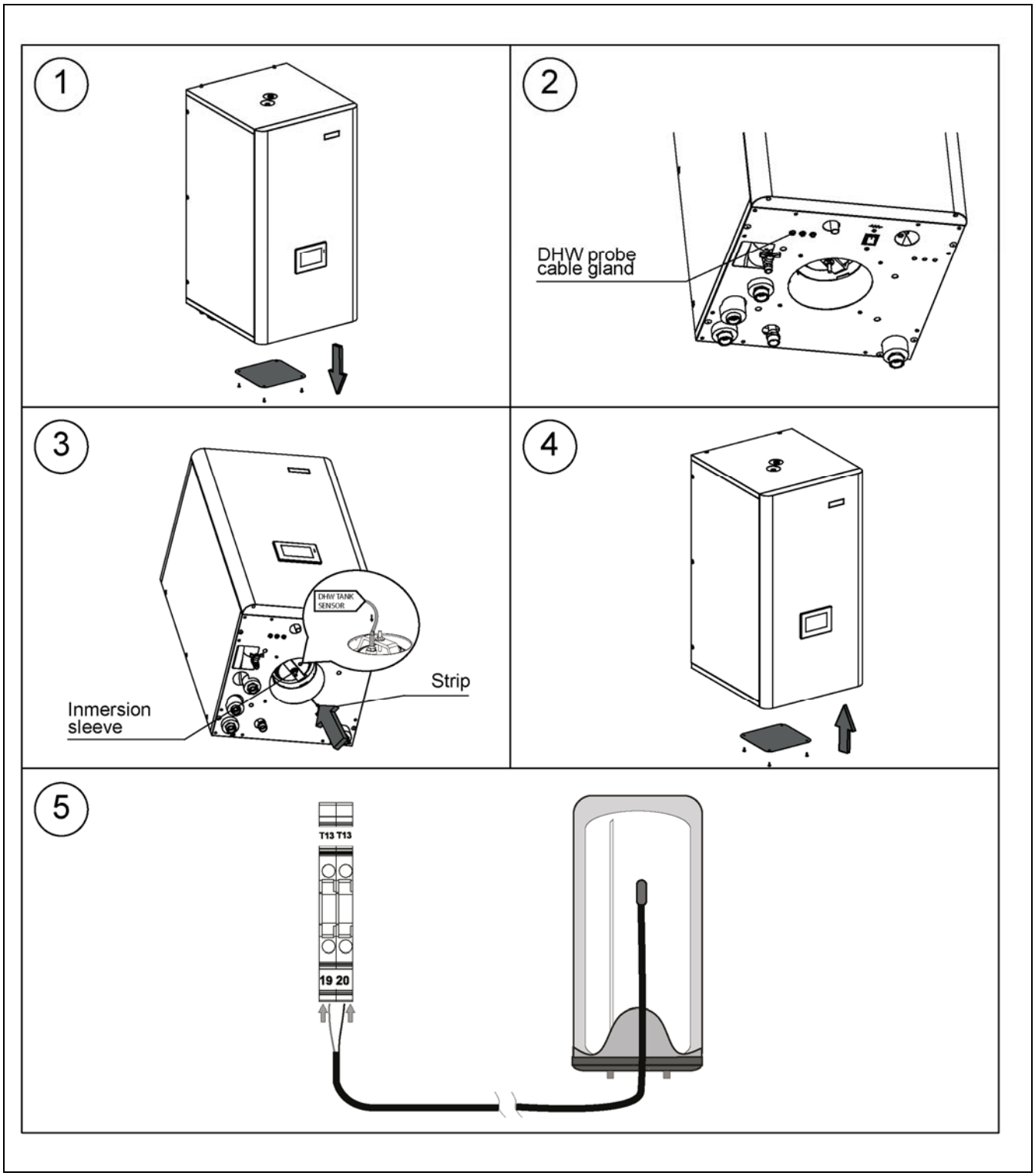

ACQUA SE

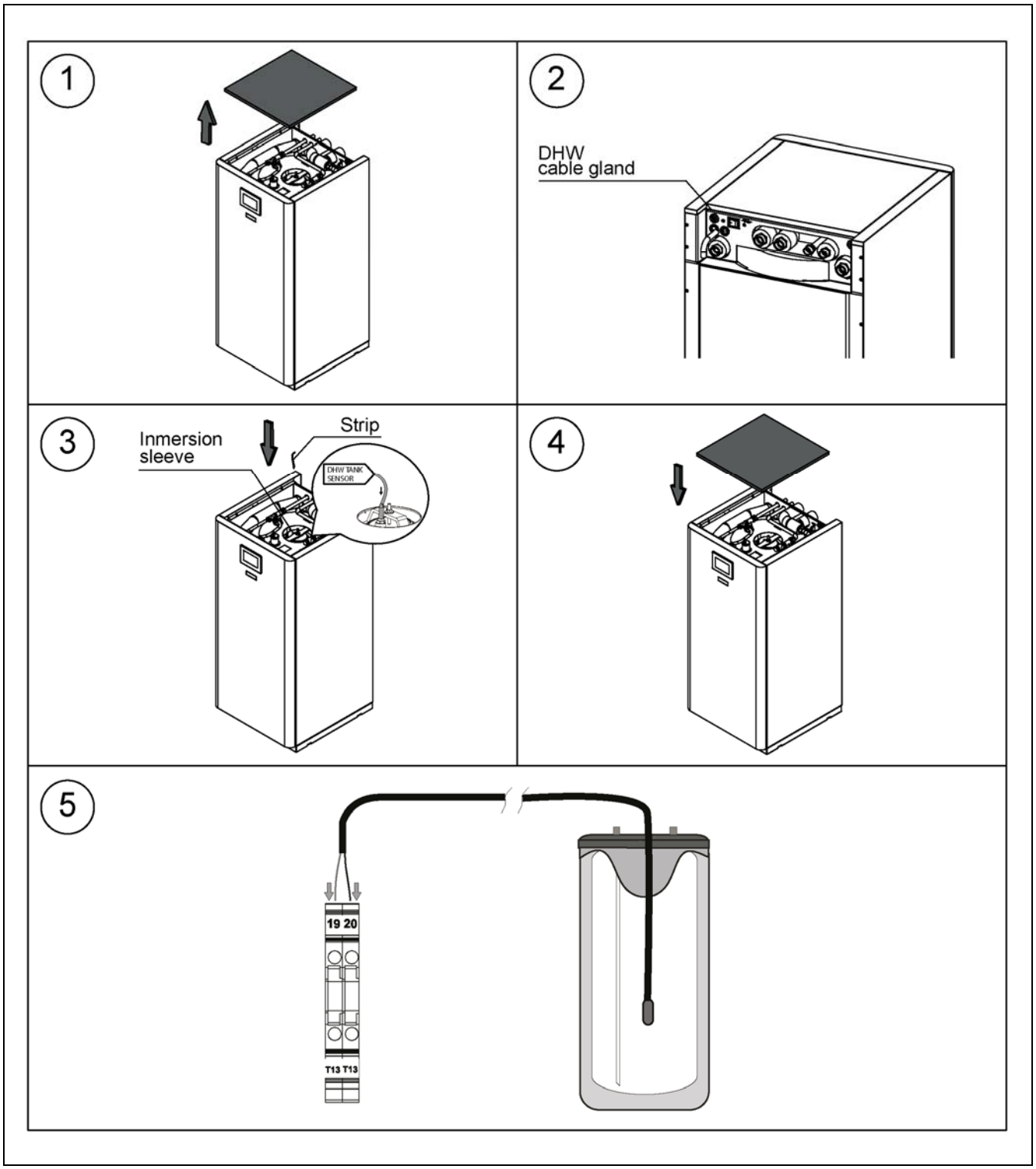

The sensor supplied with the heat pump is 5 metres long. If necessary, it can be extended to a maximum distance of 20 meters (section between 0.25 ÷ 1.25 mm^2).

DANGER: Whenever any work is done on the electrical installation of the heat pump, make sure it is disconnected from the main electrical supply network.

3.7 Assembling and connecting the control panel

The control panel is supplied inside the heat pump and must be assembled on the front of the **ACQUA DUO/TRIO** hydraulic module. This is done by opening the door of the module and accessing the control unit bracket located at the rear. For proper assembly, follow the steps below carefully:

1. Open the door of the **ACQUA DUO/TRIO** module and insert the control panel of the **DUAL CLIMA HT** heat pump in the housing provided for it in the module door.

ACQUA ME

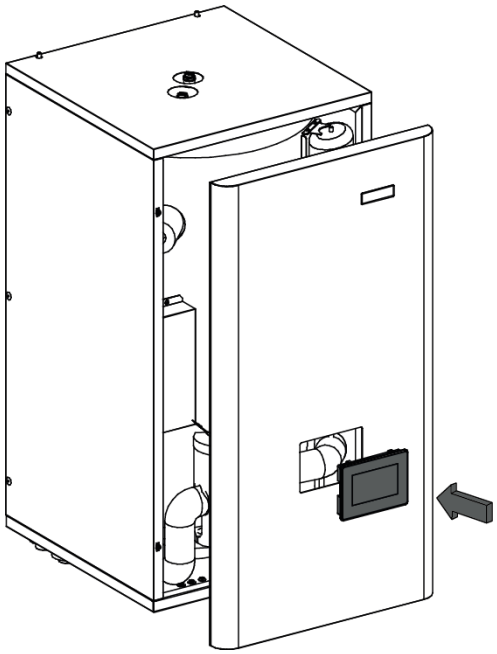

ACQUA SE

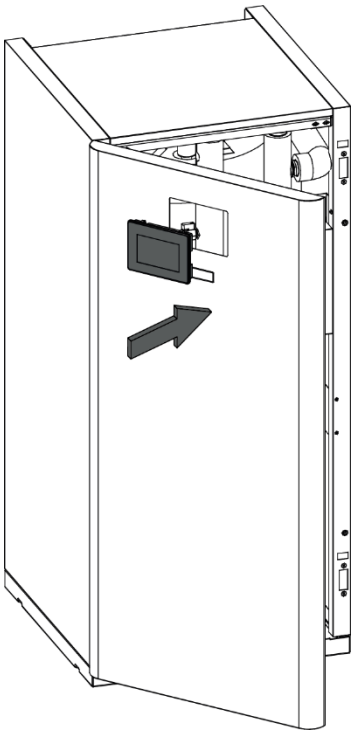

2. Turn the fastening brackets at the rear of the control panel and tighten the screws until it is firmly secured.

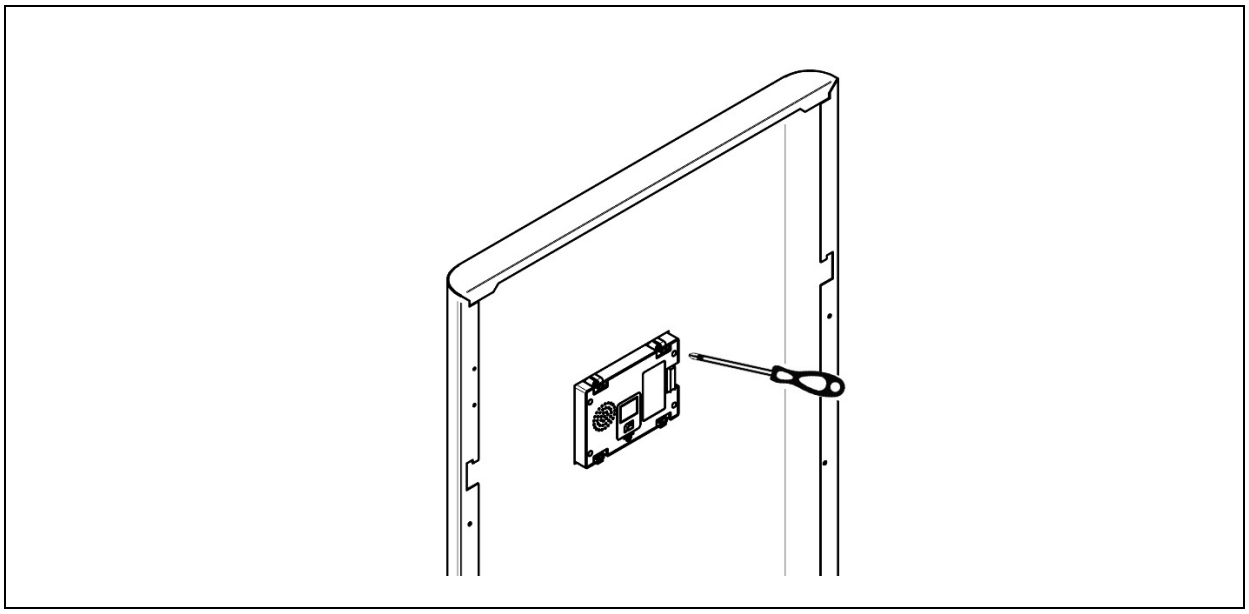

3. Insert the connector at the end of the control panel cable into the connector at the rear of the control panel. **The length of the cable inside the module should be enough** to enable opening of the front of the equipment to perform maintenance tasks on the inside without having to disconnect the cable.

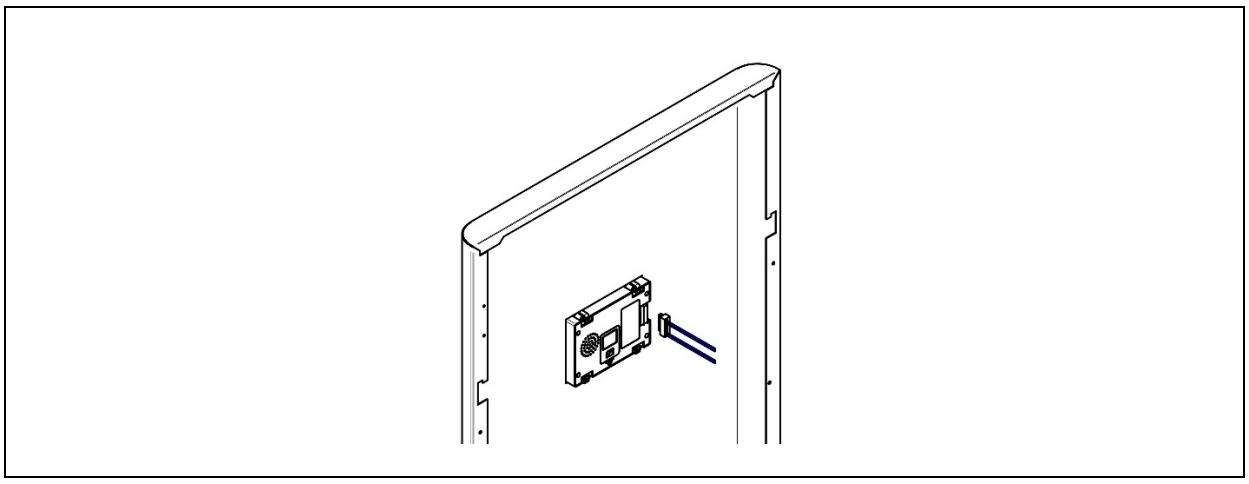

Before switching on the heat pump, make sure that the control panel is connected to the outdoor equipment. (See "Connecting the control panel" in the heat pump's instruction manual). The hydraulic module has several cable feedthroughs at the top, one of which can be used to insert the cable into the equipment.

The cable supplied with the heat pump is 5 metres long. If necessary, it can be extended to a maximum distance of 30 meters (section between 0.25 ÷ 1.25 mm^2).

DANGER: Whenever any work is done on the electrical installation of the heat pump, make sure it is disconnected from the main electrical supply network.

IMPORTANT: Make sure that the length of the cable inside the module is enough to enable opening of the front cover.

3.8 Electrical connections

The electrical installation of the **ACQUA DUO/TRIO** module must be performed by qualified personnel according to the corresponding current regulations. The electrical connections must be made in such a way that the module can be completely isolated and disconnected to perform all maintenance tasks in safe conditions.

The hydraulic module has several cable feedthroughs at the rear for the insertion of the wiring inside the equipment. The wiring exposed to outdoor weather conditions must be protected by cable ducts or sleeves or be appropriate for use outdoors (H07RN-F type cable or superior). It is also advisable to keep a minimum distance of 25 mm between 230 V power cables (general power supply, diverter valves, backup elements, circulation pumps, etc.) and 5 to 12 V power cables (control panel cable, temperature sensors, room sensors, etc.) and run them through separate pipes.

ACQUA ME

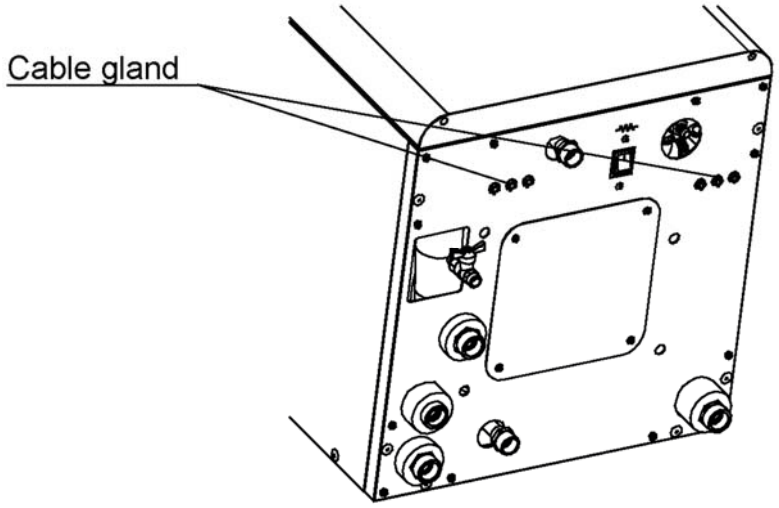

ACQUA SE

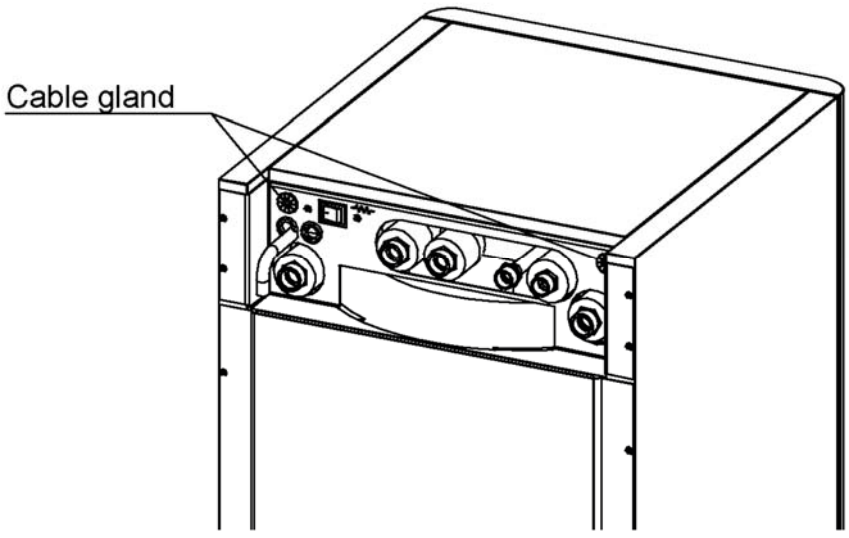

IMPORTANT: Whenever any work is done on the electrical installation of the module, make sure it is disconnected from the main electrical supply network.

3.9 Connecting the DHW diverter valve (G1)

The **ACQUA DUO ME/SE y ACQUA TRIO ME/SE** hydraulic module is equipped with a motorised 3-way diverter valve that directs the water flow from the heat pump to the DHW exchanger or to the Heating/Cooling installation, depending on the command signal it receives. This requires a 3-wire electrical cable to be passed from the connections strip of the **DUAL CLIMA HT** heat pump to the inside of the **ACQUA DUO/TRIO** module. The hydraulic module has several cable feedthroughs, one of which can be used to insert the cable into the equipment.

The electrical cable of the diverter valve must be connected from the general connections strip of the heat pump to the connections strip of the **ACQUA DUO/TRIO** module. Perform the connection as described in the images below:

DUAL CLIMA HT Heat pump ACQUA DUO/TRIO Hydraulic module

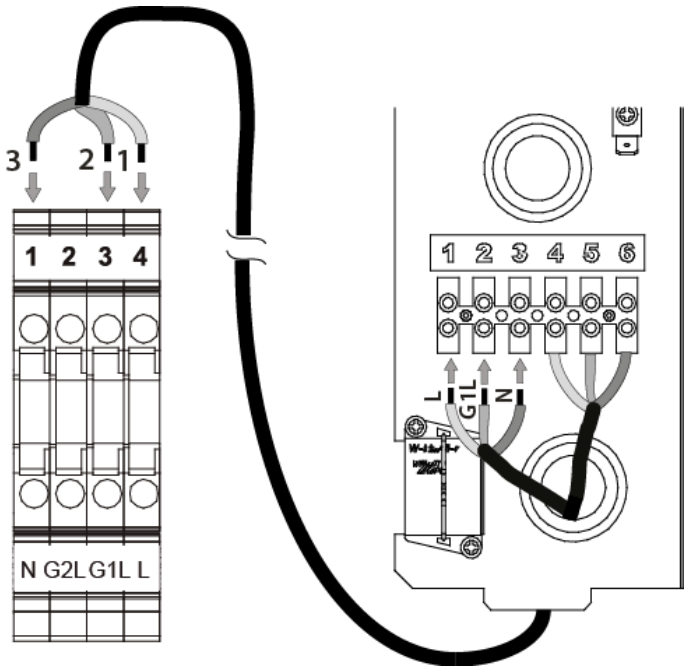

IMPORTANT: Whenever any work is done on the electrical installation of the heat pump, make sure it is disconnected from the main electrical supply network.

3.10 Filling the installation

The **ACQUA DUO SE 170 and ACQUA TRIO SE 170** hydraulic module has an internal filling disconnector and pressure gauge that are used to fill the Cooling/Heating installation completely, including the external unit and DHW storage tank heat exchanger. The hydraulic installation also includes air vents and the hydraulic components required for correct filling.

Along with their documentation, models **ACQUA DUO ME 110** and **ACQUA TRIO ME 110** are supplied with a filling kit consisting of a filling disconnector and a pressure gauge that should be installed in an accessible location. The filling disconnector is not supplied with the **ACQUA DUO 110** and **ACQUA TRIO 110** models.

To fill, simply open the filling disconnector valves until the pressure gauge shows a pressure between 1 and 1.5 bar. The heat pump (external unit) is equipped with a manual air vent valve at the top of the flow pipe of the heat exchanger (condenser). Open this air vent during filling and wait until water starts flowing out (refer to the Instruction Manual of the **DUAL CLIMA HT** heat pump). Models **ACQUA DUO ME 110 and ACQUA TRIO ME 110** are provided with manual air vent valves at the top that are used in the same way. The rest of the installation must also be bled using the air vent valve provided for that purpose. Filling should be slow so the air can be evacuated from the water circuit. Once the installation is full, close the filling disconnector valves.

IMPORTANT: Starting up the heat pump with no water can cause serious damage to the equipment.

3.11 Draining

The **ACQUA DUO/TRIO** hydraulic module is provided with drain valves that are used to drain the water from the primary circuit or the DHW from inside the storage tank, depending on the model. To drain either circuit properly, connect a flexible hose to the corresponding valve and place the other end at a drain.

3.12 Draining the primary circuit

To drain the primary circuit installation, open the air vent valves in the Heating/Cooling installation to allow air to enter the circuit. After draining the circuit, close the valve and disconnect the flexible pipe.

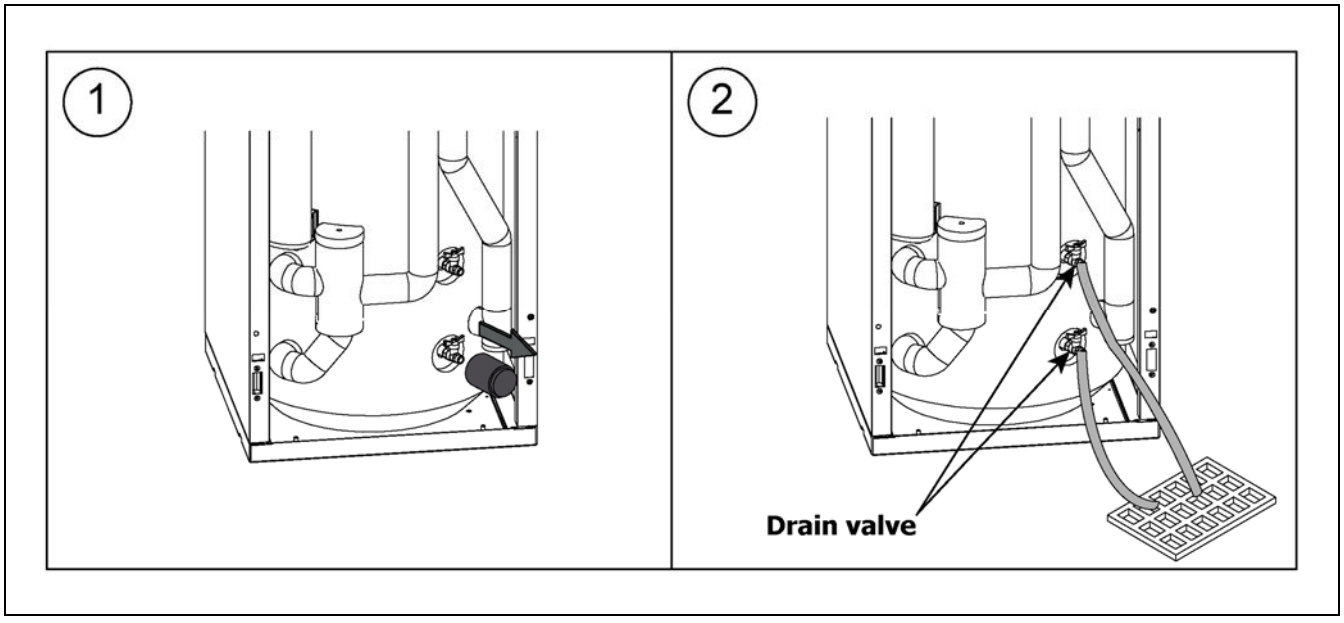

3.13 Draining the DHW storage tank

The DHW circuit of the tank must be depressurised before draining the tank.

To drain the DHW storage tank in models that are not provided with DHW drain valves, remove the storage tank's elliptical cover and insert a flexible hose into the tank.

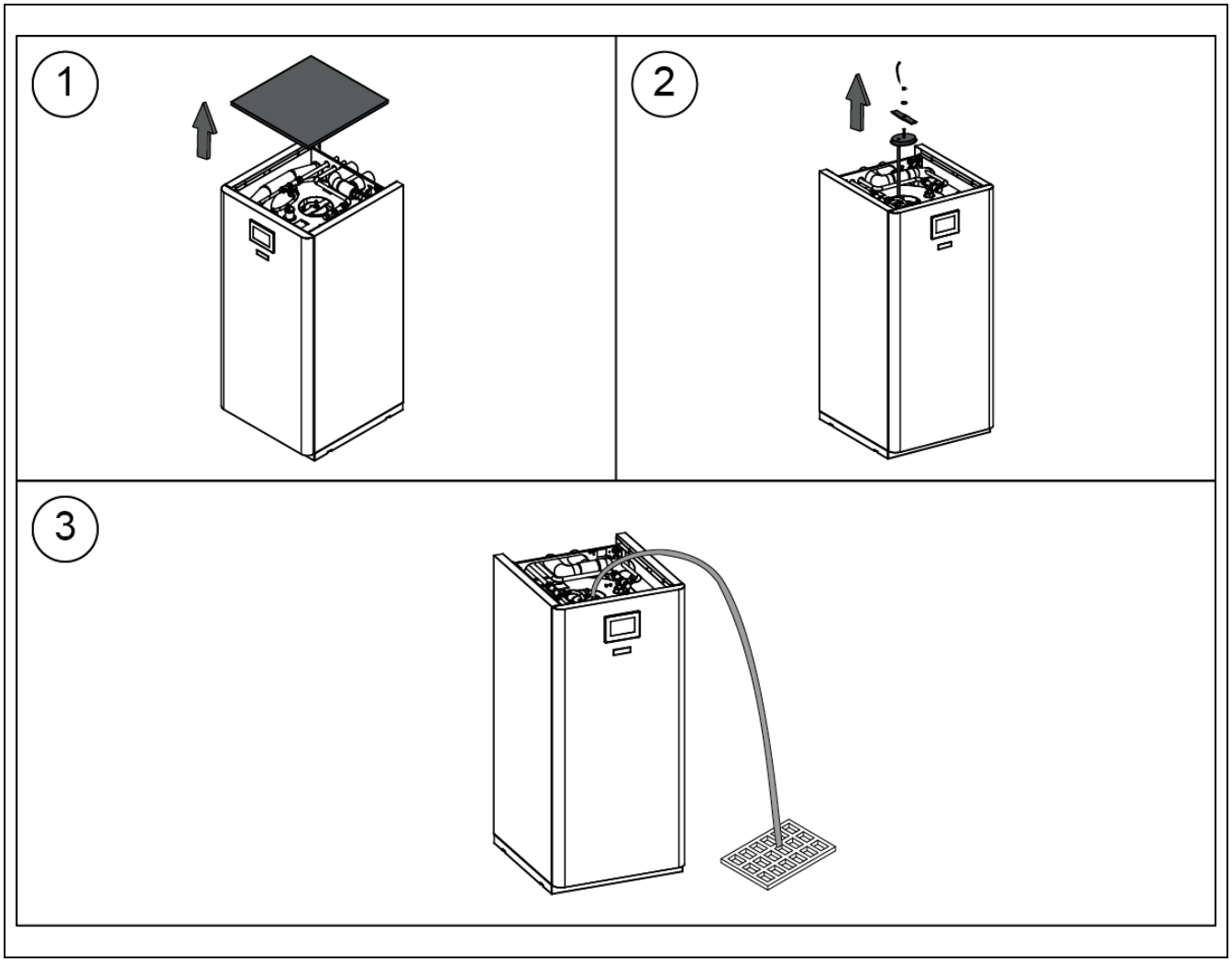

Place the other end of the hose on a nearby floor drain that is lower than the bottom of the tank. Place your mouth over the end of the hose, suck in slightly and remove the hose from your mouth to start water flowing and wait until the tank is completely empty.

3.14 Precautions against freezing

During periods of freezing and especially in geographical locations subject to very low temperatures, precautions should be taken to prevent the water in the primary circuit from freezing and the subsequent damage to the installation. It is advisable to add anti-freeze to the water in the primary circuit of the buffer tank. The anti-freeze must be compatible with public hygiene standards.

If the installation is going to be out of service for a long period of time, it is recommended to **drain the water from the tank**.

4 OPERATION

The **ACQUA DUO/TRIO** hydraulic module is a passive accessory and, therefore, its operation is managed by the control unit of the **DUAL CLIMA HT** heat pump that is connected to it and which should be mounted on the front of the module (see *"Assembling and connecting the control panel"*). To ensure proper set-up and operation of the control unit, carefully read the "Installation and Operation Instruction Manual" supplied with the heat pump.

The **ACQUA DUO/TRIO** hydraulic module has an internal stainless steel tank for the production of DHW and a primary circuit "buffer" tank.

The minimum requirement necessary to make the most of all the features of the hydraulic module is for the DHW and Heating and/or Cooling services to be activated.

The **DUAL CLIMA HT** heat pump is configured in the factory to provide Heating, Cooling and DHW service. If the installation does not have one or more of these services, **THESE SHOULD BE DISABLED** by changing the parameters in the control panel. When a service is disabled, all the operating modes referring to that service will disappear from the control panel.

When installed alongside a **DUAL CLIMA HT** heat pump, the **ACQUA DUO** module can be used in DHW and heating installations, in combination with fan coils, underfloor heating and radiators. It must be connected to a heating installation and a domestic hot water distribution network compatible with its performance and power features.

When installed alongside a **DUAL CLIMA HT** heat pump, the **ACQUA TRIO** module can be used in **DHW, heating and cooling** installations, in combination with fan coils, underfloor heating/cooling and radiators. It must be connected to a heating/cooling installation and a domestic hot water distribution network compatible with its performance and power features.

5 OPTIONAL ACCESSORIES

To complete the performance features offered by the **ACQUA DUO/TRIO** storage hydraulic module, **DOMUSA TEKNIK** offers an optional range of accessories that can be included **inside** the module. The sections below provide an explanation about how to assemble and connect these accessories correctly.

5.1 Assembly and connection of a backup element kit for DHW (optional)

The **ACQUA TRIO** hydraulic module can be equipped with a **1500 W** backup heating element KIT for DHW. This heating element enables DHW production at temperatures over 50ºC, while also allowing the **DUAL CLIMA HT** heat pump to run in cooling mode while the heating element heats the DHW. This element is activated by the **IR** switch (element switch) located at the bottom of the **ACQUA TRIO ME 110** module and at the rear of the **ACQUA TRIO SE 170** module. Take the following steps to install the KIT correctly:

- Disassemble and remove the original elliptical cover of the DHW storage tank and replace it with the elliptical cover equipped with the backup element connection included in the kit.
- Mount the heating element on the elliptical cover of the KIT and seal the thread.
- Locate the electrical connections strip of the **ACQUA TRIO** hydraulic module inside the module and remove the cover of the connections strip.
- Connect the cable of the heating element to terminals 7 and 8 of the electrical connections strip of the **ACQUA TRIO** hydraulic module, which is inside the module (see "Electrical diagram").
- Connect the heating element to an external power supply (230V~). This is done by connecting an electric cable with an external power supply (not supplied in the Kit) to terminals 9 and 10 on the electrical connections strip of the **ACQUA TRIO** hydraulic module.
- Set the desired temperature of the DHW on the thermostat included in the heating element.
- Activate the IR element switch at the rear or at the bottom by setting it to "I" for the DHW to be heated by the heating element or "0" for the DHW to be heated by the heat pump.
- For the DHW to be heated only by the heating element and the heat pump to run simultaneously in cooling mode, select **DHW MODE** deactivated on the heat pump control panel.

IMPORTANT: If the DHW support heater exceeds 1,500 W of power, a relay must be placed between the terminals of the terminal block and the heater.

ACQUA ME

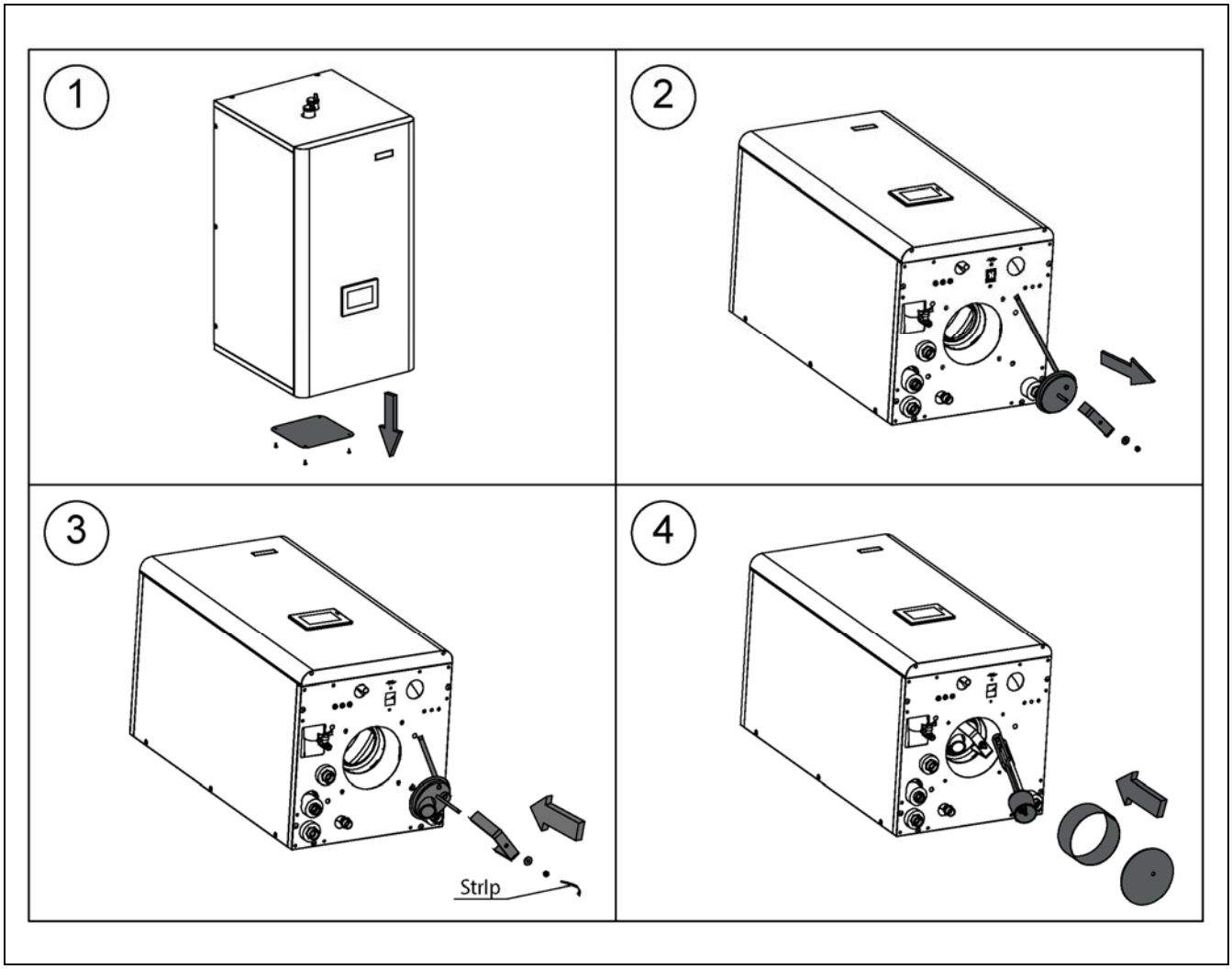

ACQUA SE

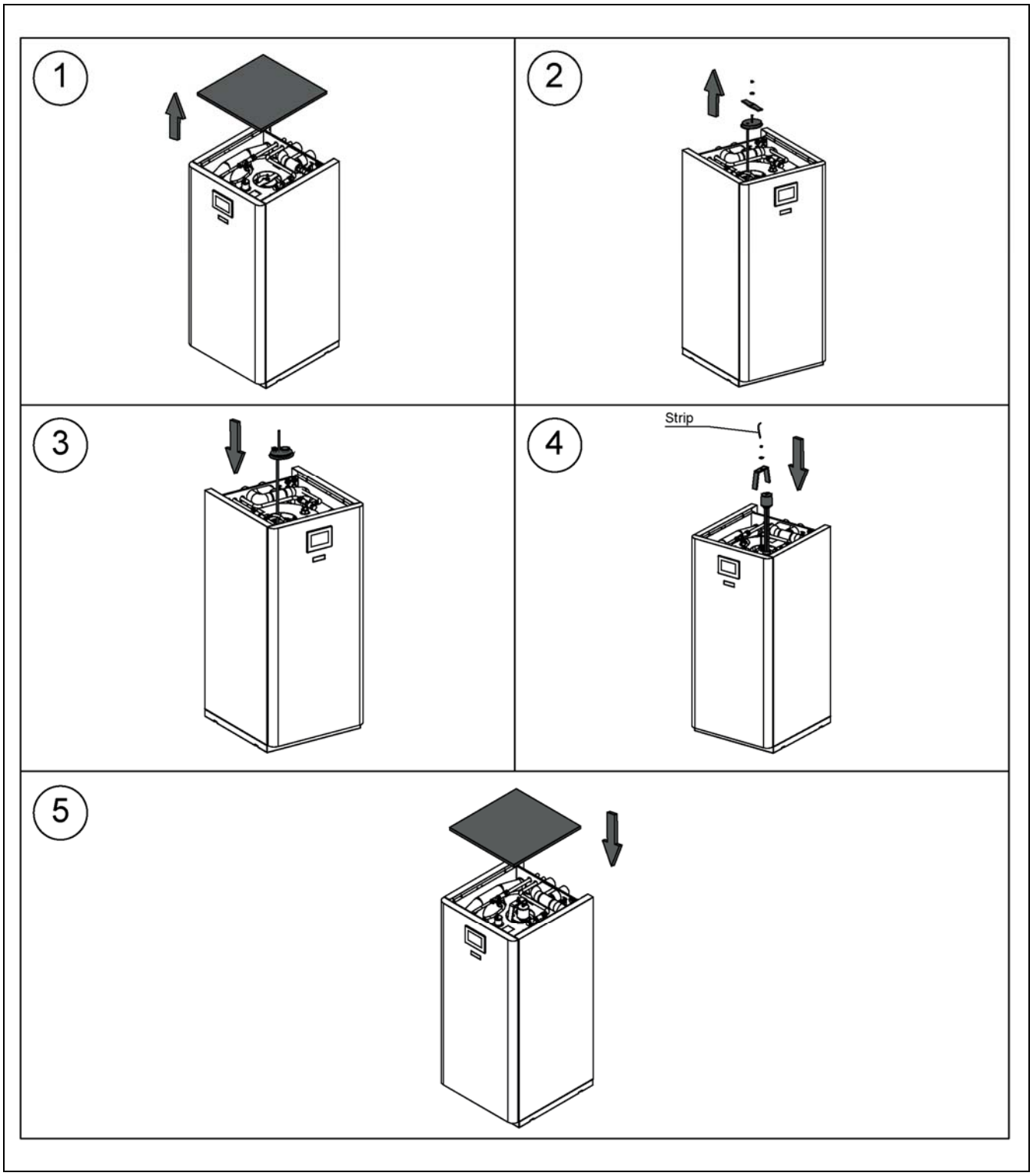

5.2 Mounting and connecting the backup element kit for Heating and DHW (only optional for models ACQUA DUO 110, ACQUA DUO ME 110 and ACQUA DUO SE 170)

The **ACQUA DUO 110, ACQUA DUO ME 110 and ACQUA DUO SE 170** hydraulic modules allow a backup heating element **Kit** to be mounted for heating and DHW. This backup element is used to heat the primary circuit and the DHW storage tank at the same time. This increases comfort performance when required by outdoor weather conditions. Take the following steps to install the **Kit** correctly:

- Dismount and remove the front cover of the **ACQUA DUO ME 110** model or open the door in the **ACQUA DUO SE 170** model to access the heating element plug.
- Dismount and remove the plug of the heating element connection and replace it with the heating element supplied with the Kit, making sure to seal it correctly.
- Place the connections box supplied with the Kit inside or near the module.
- Locate the electrical connections strip of the heating element Kit box.

Connect the heating element activation signal from the connections box of the **Kit** to the **DUAL CLIMA HT** heat pump. Do this by connecting a bridge between terminals **E2L (5)** and **E1L (7)** of the **DUAL CLIMA HT** heat pump components terminal strip. The next step is to connect terminals **E2L (5)** and **E1N (8)** of the **DUAL CLIMA HT** heat pump components strip and terminals **(5)** and **(6)** of the electrical connections strip of the backup element Kit box (see "Electrical connections diagram of the backup element Kit box"). To make the connections, an electrical cable (supplied in the **DOMUSA TEKNIK** heating element Kit) should be connected from the **ACQUA DUO** module to the heat pump. The hydraulic module has several cable feedthroughs, one of which can be used to extract the cable from inside the equipment.

- Connect the heating element and terminals **(3)** and **(4)** on the electrical connections strip of the heating element Kit box, (see "Electrical connections diagram of the Kit box").
- Connect the heating element to an external power supply (230V~). This is done by connecting an electric cable with an external power supply (not supplied in the Kit) to terminals **(1)** and **(2)** on the electrical connections strip of the heating element Kit box. The cable section and the electrical power supply must be appropriate for the heating element to withstand.
- Set the desired temperature on the thermostat included in the heating element.
- Place the cover again or close the door.

IMPORTANT: The E2 output relay that activates the heating element has a maximum consumption of 1A; therefore, connection of a heating element will require connecting a relay between the strip terminals and the heating element (the relay is included in the DOMUSA TEKNIK heating element Kit).

IMPORTANT: The cable section and the electrical power supply must be appropriate for the heating element to withstand.

IMPORTANT: Whenever any work is done on the electrical installation of the heat pump, make sure it is disconnected from the main electrical supply network.

ACQUA SE

1

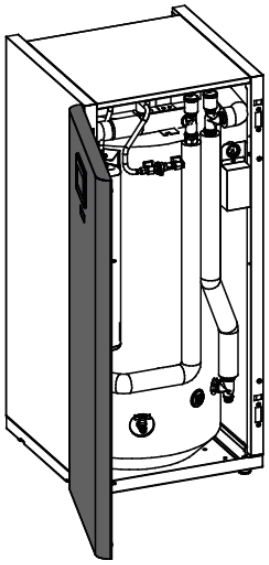

2

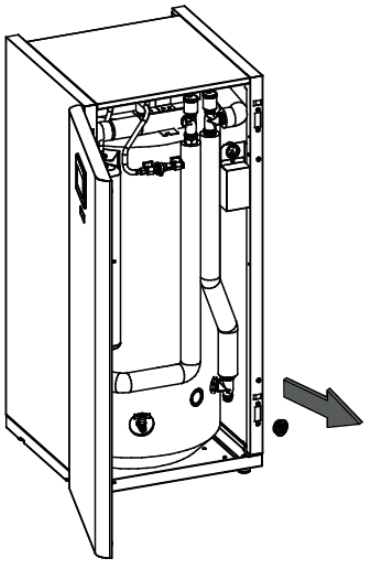

3

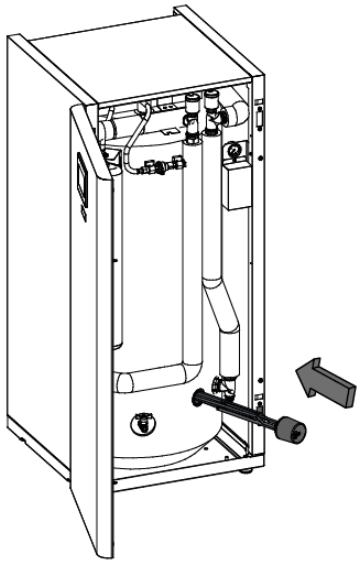

ACQUA ME

1

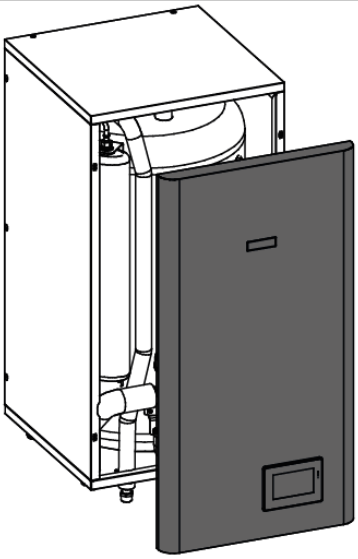

2

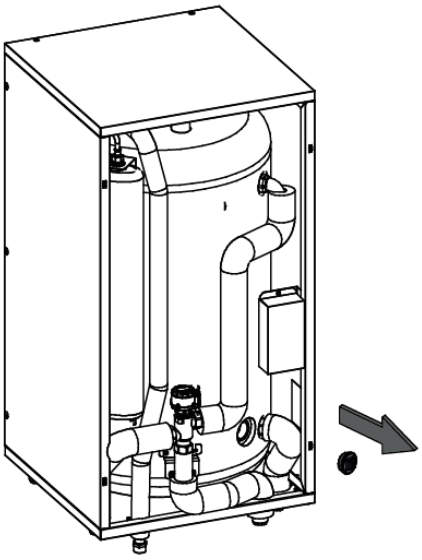

3

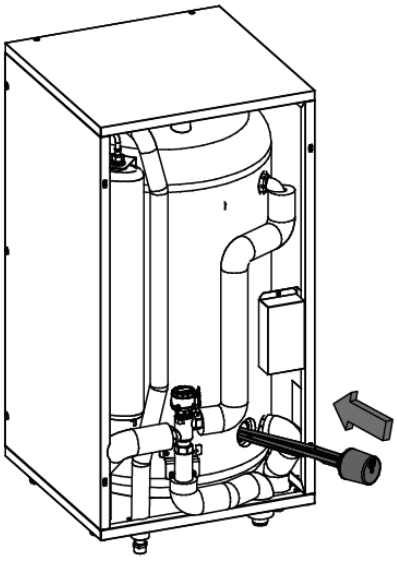

5.3 Electrical connections diagram of the Heating and DHW backup element kit box (only optional for models ACQUA DUO 110, ACQUA DUO ME 110 and ACQUA DUO SE 170).

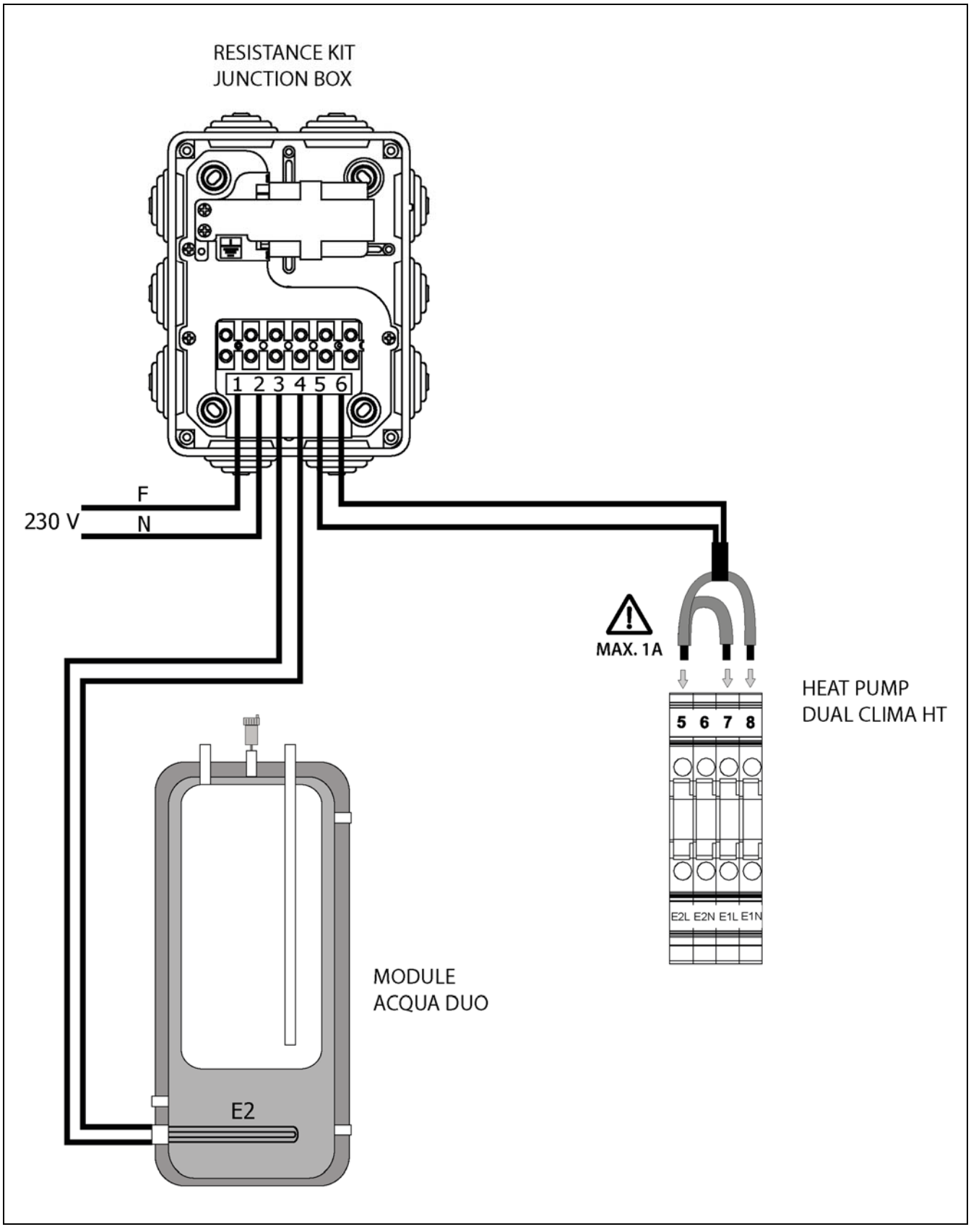

5.4 Assembly and connection of a backup pump (optional)

The hydraulic module can include the assembly of a circulation pump to increase machine water flow if needed, in addition to the flow generated by the internal pump (**C1**). This circulation pump will run simultaneously with the indoor pump of the **DUAL CLIMA HT** heat pump whenever it is running in Heating or Cooling mode and during DHW heating.

To assemble the backup pump **inside** the **ACQUA DUO ME/SE** and **ACQUA TRIO ME/SE** modules, a "reel" pipe is included inside the module to mount the optional pump offered by **DOMUSA TEKNIK.** This "reel" pipe is inside the heat pump return pipe. In this case, the electrical connection must run parallel to the pump (**C1**). This will allow the pump to work in both Heating and Cooling modes and during DHW heating along with the pump (**C1**). To assemble this pump, the first step is to slit the insulating hose that protects the "reel", dismount it and seal the pump in its place. Take the following steps to install it correctly:

1. Slit the insulating hose that protects the "reel" and remove it, as shown in the figure.

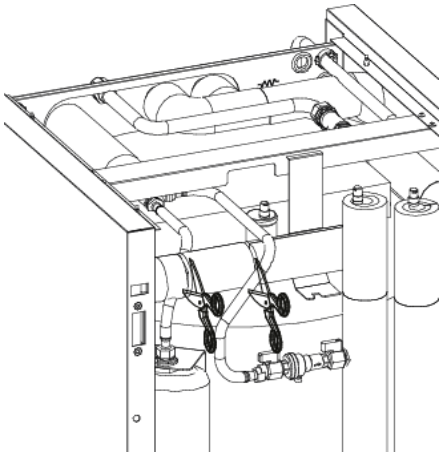

2. Dismount the "reel" and remove it.

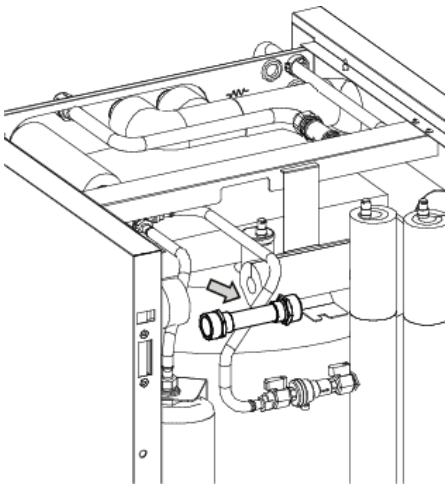

3. Assemble the circulation pump in its position, making sure that the direction of the flow is correct, as shown in the figure, and ensuring that the connections are properly sealed.

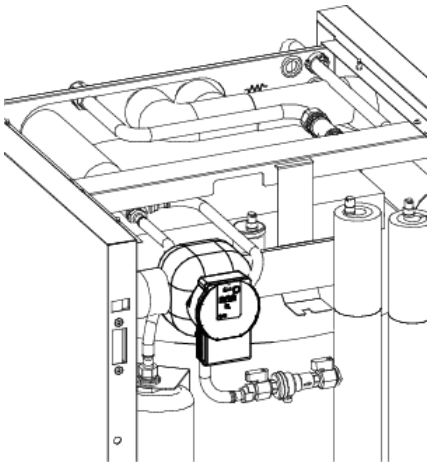

4. Connect the power cable supplied with the kit to the **DUAL CLIMA HT** heat pump (connection only for the backup pump kit or when the pump is installed on the return to the heat pump).

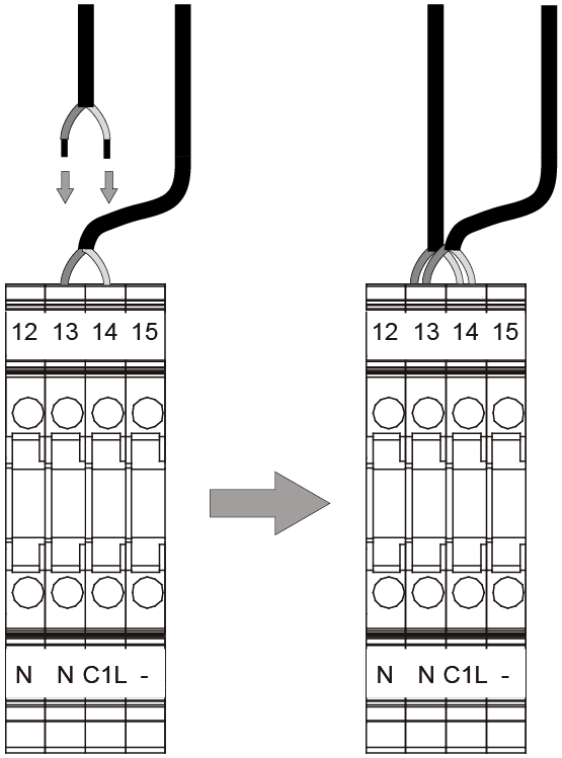

The electrical connection of the hydraulic pump must run parallel, on the same terminals used for standard connection of the internal pump of the **DUAL CLIMA HT** heat pump, between terminals **C1L** and **N** (Neutral) of the heat pump components terminal strip. This will ensure that both hydraulic pumps are connected. To do this, an electrical cable (supplied in the **DOMUSA TEKNIK** pump Kit) should be connected from the **ACQUA DUO SE 170/TRIO SE 170** module to the heat pump, located on the outside. The hydraulic module has several cable feedthroughs at the top, one of which can be used to extract the cable from inside the equipment. This connection will enable the backup pump to run in Heating/Cooling mode and during DHW heating.

5. **If a backup pump is installed in the return pipe** of the Heating/Cooling installation.

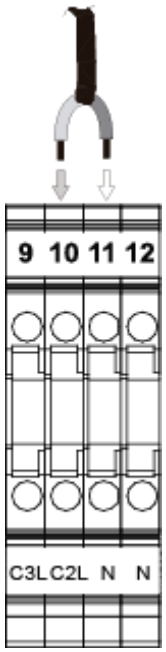

The hydraulic pump is connected between terminals **C2L** and **N** (Neutral) of the heat pump components terminal strip. To do this, an electrical cable should be connected from the **ACQUA DUO SE 170/TRIO SE 170** module to the heat pump, located on the outside. The hydraulic module has several cable feedthroughs at the top, one of which can be used to extract the cable from inside the equipment. This connection will enable the backup pump to run in Heating/Cooling mode.

6 ELECTRICAL DIAGRAM

AQUA-TRIO ME/SE

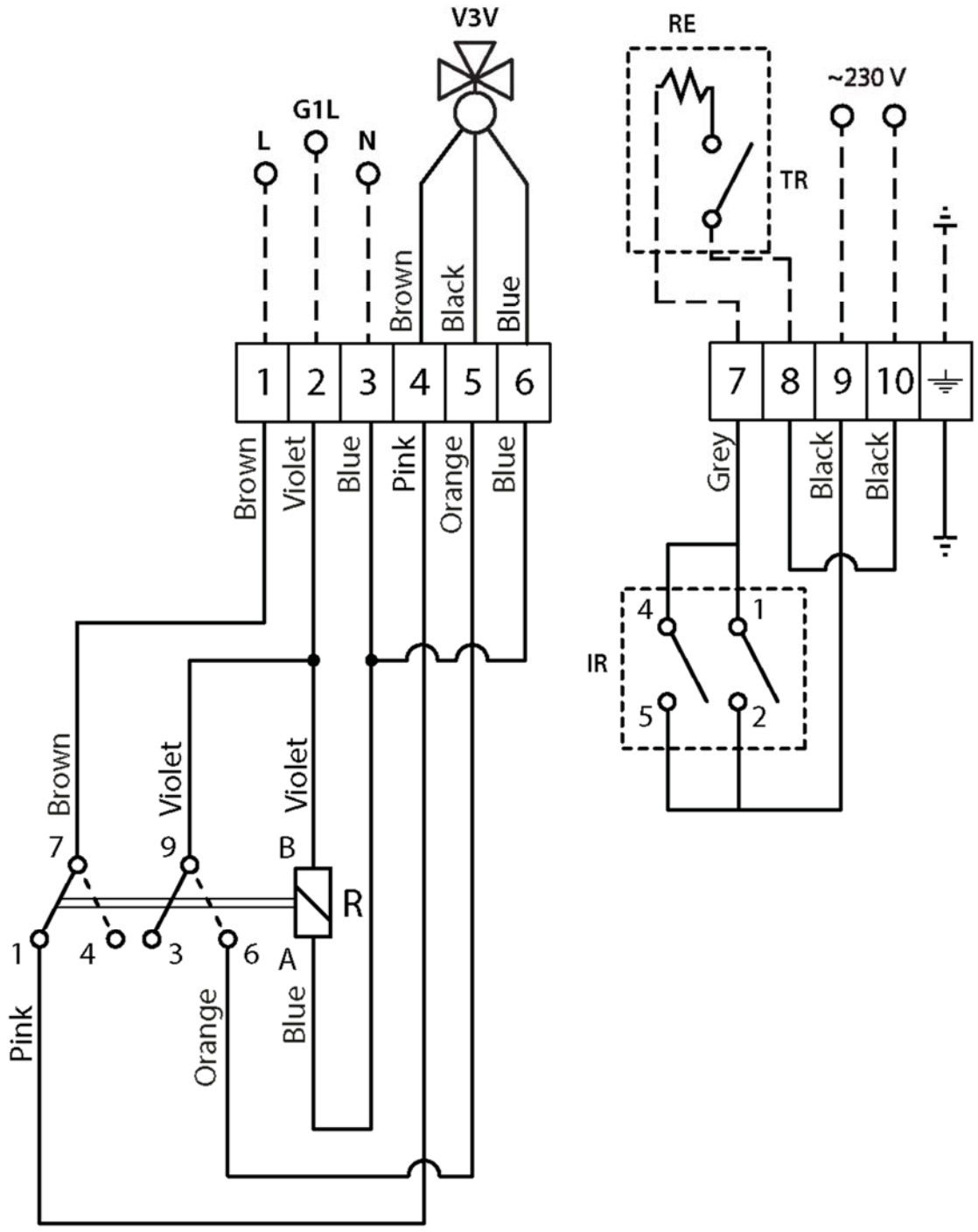

ACQUA-DUO ME/SE

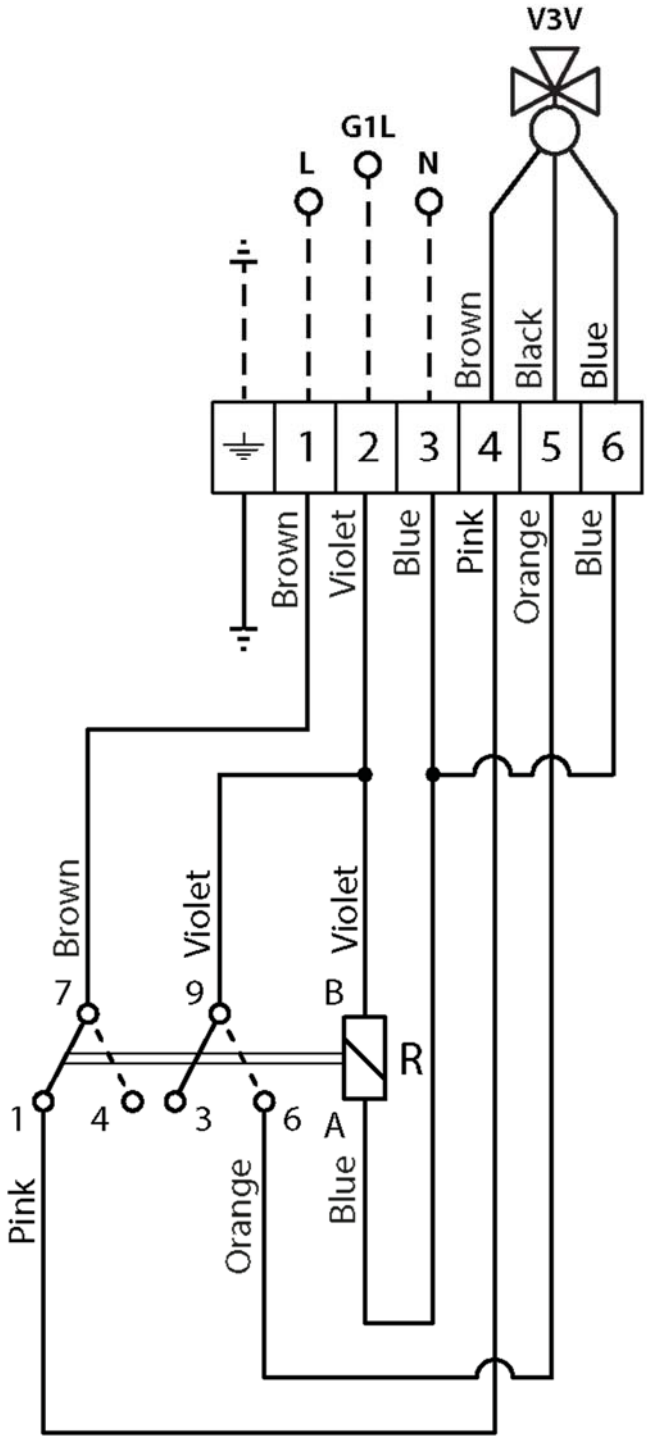

V3V: Inverter 3-way valve.

R: DHW 3-way valve relay.

G1L: Heat Pump DHW signal (NC).

L: Heat Pump Heating signal (NO).

N: Heat Pump shared signal (Neutral).

RE: DHW heating element 1.5 kW.

TR:Heating element internal thermostat.

IR:Heating element switch.

IMPORTANT: Starting up the heat pump with no water can cause serious damage to the equipment.

7 DIMENSIONS AND ASSEMBLY

ACQUA DUO SE 170

Rear view

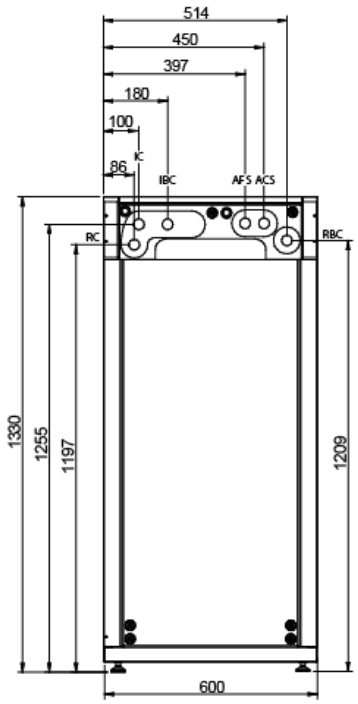

Top view

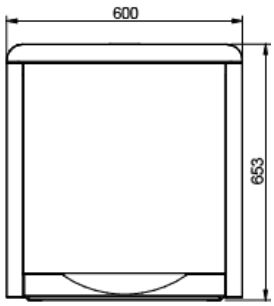

ACQUA TRIO SE 170

Rear view

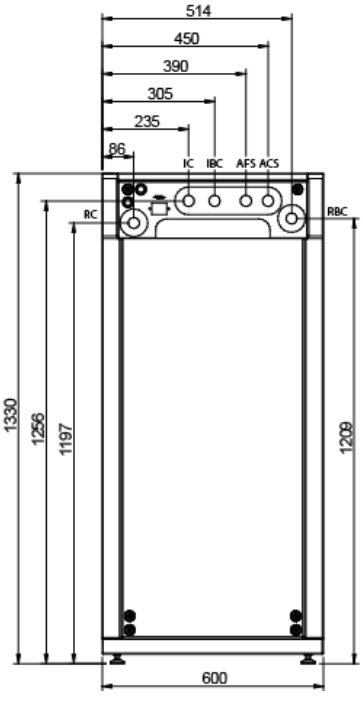

Top view

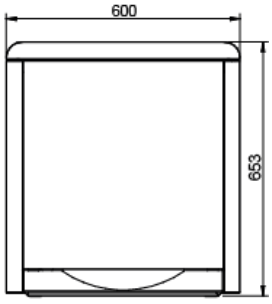

ACQUA ME DUO 110

Front view

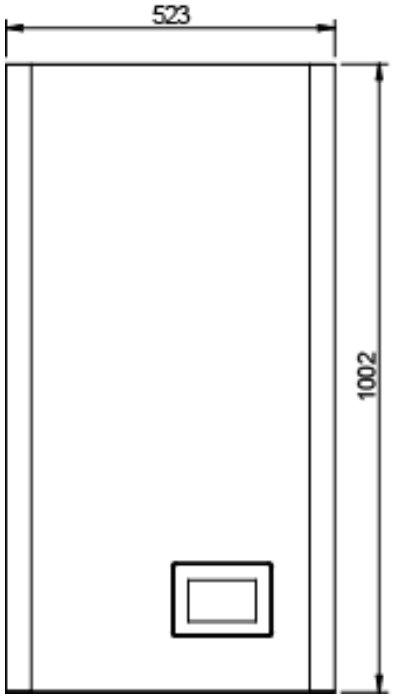

Bottom view

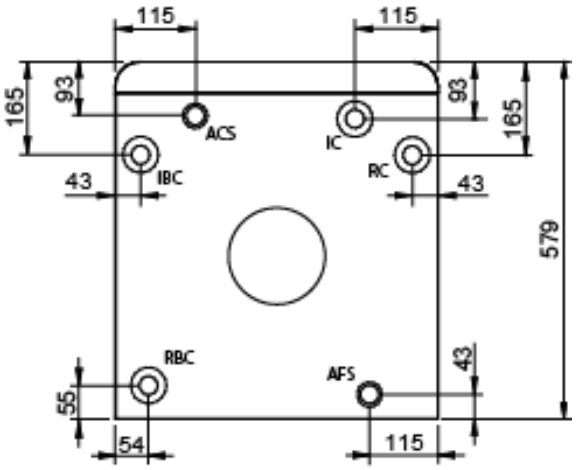

ACQUA ME TRIO 110

Front view

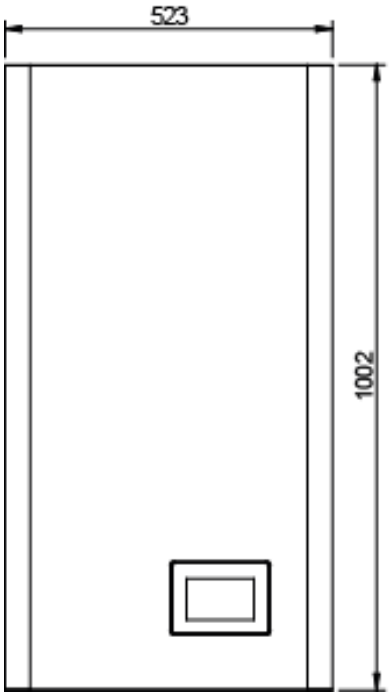

Bottom view

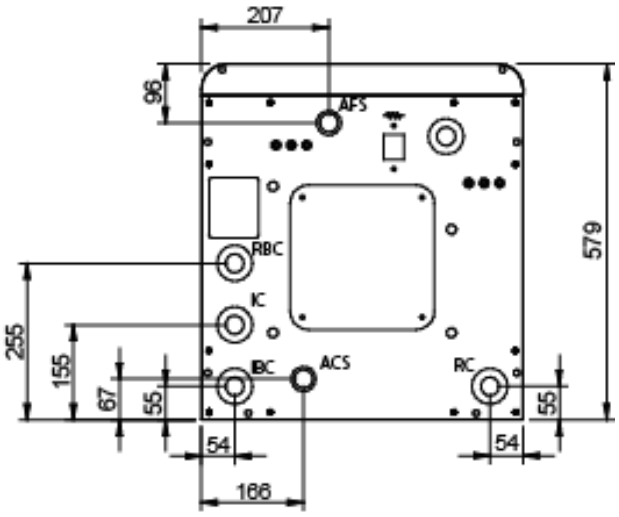

ACQUA 110

Front view

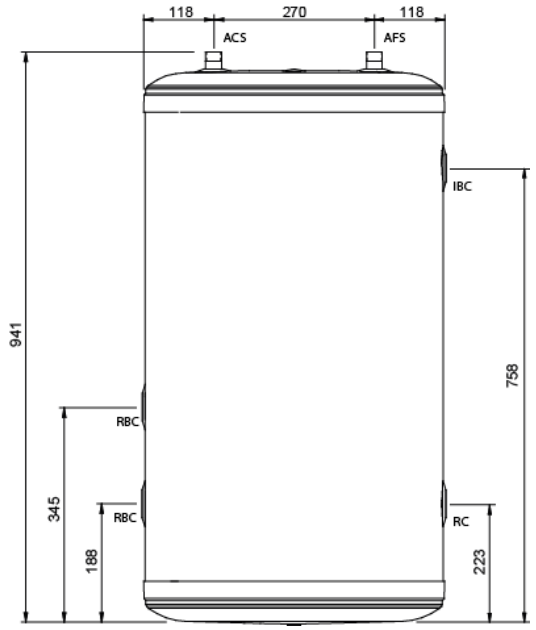

DHW: DHW outlet, (3/4" M fitting).

DCW: Domestic cold water intake (3/4" M fitting).

RHP1: Primary circuit return from the "tank in tank" to the heat pump (1" M fitting).

RHP2: Buffer return to the heat pump (1" M fitting).

RC: Heating/Cooling circuit return (1" M fitting).

IHP: Primary circuit intake to the "**tank in tank**" (1" M fitting).

IC: Heating/Cooling outlet, (1" M fitting).

8 TECHNICAL CHARACTERISTICS

Model	DHW Volume	Primary circuit Buffer volume
ACQUA-TRIO ME 110	DHW 85 L	20 L
ACQUA-DUO ME 110	DHW 85 L	20 L
ACQUA-TRIO 110	DHW 85 L	20 L
ACQUA-DUO 110	DHW 85 L	20 L
ACQUA-TRIO SE 170	DHW 120 L	30 L
ACQUA-DUO SE 170	DHW 120 L	30 L

NOTES:

NOTES:

DOMUSA
TEKNIK

POSTAL ADDRESS
Apartado 95
20730 AZPEITIA
Tel.: (+34) 943 813 899

FACTORY AND OFFICES
Bº San Esteban s/n
20737 ERREZIL (Gipuzkoa)
Fax: (+34) 943 815 666

CDOC003064 09/12/24

www.domusateknik.com

DOMUSA TEKNIK reserves the right to make changes to the characteristics of its products without prior notice.