DOMUSA TEKNIK

ACQUA DUO EC
ACQUA TRIO EC

HYDRAULIC MODULE

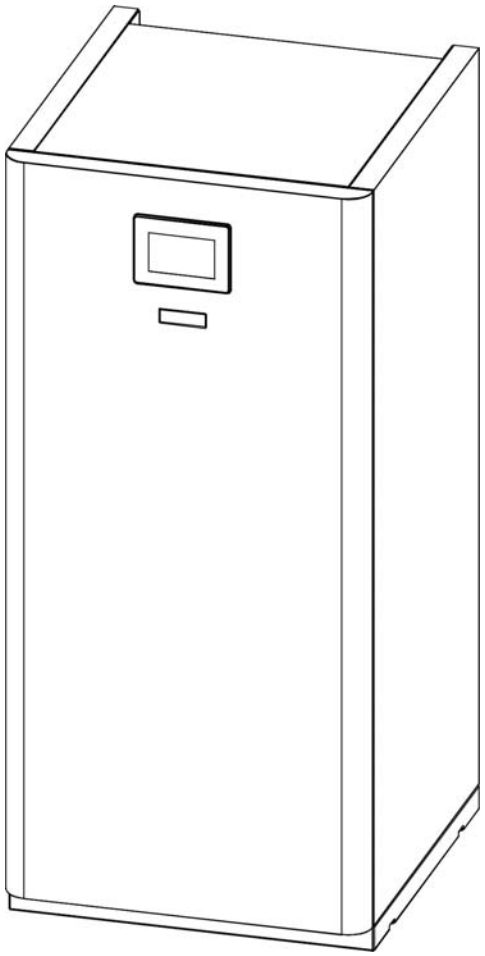

EN | INSTALLATION AND OPERATING INSTRUCTIONS

We would like to thank you for choosing a **DOMUSA TEKNIK** heat pump accessory. You have chosen the **ACQUA-DUO EC/TRIO EC** model from the **DOMUSA TEKNIK** product range. This is an "all-in-one" hydraulic accumulation module. When it is installed alongside a heat pump from the **DUAL CLIMA HT EC** product range and with the proper hydraulic installation, it can provide the level of comfort you need in your home.

This document is an integral and essential part of the product and must be given to the user. Please read the warnings and advice contained in this manual carefully as they provide important information for safe installation, operation and maintenance.

This equipment must only be installed by qualified personnel in accordance with current standards and following the manufacturer's instructions.

Both commissioning and all maintenance tasks on the equipment must be performed exclusively by **DOMUSA TEKNIK** Official Technical Assistance Services.

Incorrect installation of this equipment may cause damage to people, animals and property. The manufacturer accepts no liability for such damage.

CONTENTS

1 SAFETY WARNINGS 4
1.1 USE AND INSTALLATION WARNINGS 4
1.2 PERSONAL SAFETY WARNINGS 4
1.3 WATER CHARACTERISTICS 5
2 LIST OF COMPONENTS 6
3 INSTALLATION INSTRUCTIONS 7
3.1 ACCESSORIES SUPPLIED 7
3.2 PLACING AND FASTENING 8
3.3 HYDRAULIC INSTALLATION 11
3.4 PRODUCT INSTALLATIONS 12
3.5 ELECTRICAL POWER SUPPLY OF THE INTERNAL MODULE 14
3.6 ASSEMBLY AND CONNECTION OF THE CONTROL PANEL 16
3.7 COMMUNICATION WITH THE EXTERNAL UNIT 18
3.8 ASSEMBLY OF THE DHW SENSOR 18
3.9 FILLING THE INSTALLATION 23
3.10 DRAINING 23
3.11 DRAINING THE PRIMARY CIRCUIT 23
3.12 DRAINING THE DHW STORAGE TANK 24
4 OPERATION 25
5 OPTIONAL ACCESSORIES 26
5.1 ASSEMBLY AND CONNECTION OF OPTIONAL ACCESSORIES 26
5.2 MOUNTING AND CONNECTING THE BACKUP ELEMENT KIT FOR HEATING AND DHW (ONLY OPTIONAL FOR THE FOLLOWING MODELS: ACQUA DUO ME 110 EC AND ACQUA DUO SE 170 EC) 30
5.3 ASSEMBLY AND CONNECTION OF A BACKUP PUMP (OPTIONAL) 34
6 ELECTRICAL DIAGRAM 36
7 DIMENSIONS AND ASSEMBLY 39
8 TECHNICAL CHARACTERISTICS 43

1 SAFETY WARNINGS

1.1 Use and installation warnings

The **ACQUA DUO EC/TRIO EC** module must be installed by technicians authorised by the Ministry of Industry and in compliance with current applicable laws and regulations. Please follow these recommendations strictly, given the importance of the items they refer to.

Read this instruction manual carefully and keep it safe where it can easily be located. **DOMUSA TEKNIK** shall not be liable for any damage caused by not following these instructions.

The **ACQUA DUO EC/TRIO EC** accumulation module can only be installed in combination with a heat pump from the **DOMUSA TEKNIK DUAL CLIMA HT EC** product range.

ACQUA TRIO EC modules can be used in both heating and cooling installations, as well as domestic hot water installations. **ACQUA DUO EC** modules can only be used in heating and domestic hot water installations.

This appliance must only be used for its intended purpose. Any other use should be considered inappropriate and therefore dangerous. Under no circumstances shall the manufacturer be held liable for damage caused by improper, incorrect or unreasonable use.

After removing all packaging, check that the contents are intact. If in doubt, do not use the equipment and contact the supplier. The packaging must be kept out of the reach of children as it is potentially hazardous.

Inappropriate installation or placement of the equipment or accessories may cause electric shock, short-circuits, leaks, fires or other damage to the equipment. Use only optional accessories or equipment manufactured by **DOMUSA TEKNIK** and specifically designed to work with the products presented in this manual. Do not make any changes to, replace or disconnect any safety or control devices without previously consulting with the manufacturer or the **DOMUSA TEKNIK** Official Technical Assistance Service.

When it is decided not to use the equipment any more, all parts that could potentially be a hazard must be deactivated.

1.2 Personal safety warnings

Always wear proper personal protection equipment (safety gloves, safety goggles, etc.) when performing installation and/or maintenance tasks with this equipment.

Do not touch any switches with wet hands. Touching a switch with wet hands can trigger electrical discharges. Disconnect the electrical power supply completely before working on electric components.

Do not touch water pipes or internal parts while or immediately after the equipment is running. The internal pipes or parts may be very hot or very cold, depending on how the unit is being used.

Hands can suffer heat or cold burns if they touch internal pipes or parts at inappropriate times. To prevent injuries, wait until the internal pipes or parts return to their normal temperature; otherwise, use appropriate safety gloves to handle them.

1.3 Water characteristics

The water must be in accordance with Directive EU 2020/2184 on the quality of water intended for human consumption. Special attention must be paid to the following parameters:

- Maximum chloride concentration: 250 mg / l.
- Maximum sulphate concentration: 250 mg / l.
- Maximum concentration of chlorides and sulphates: 300 mg / l.
- Maximum conductivity: 600 µS / cm.

When the chlorine concentration in the Domestic Water exceeds 250 mg/l, it is recommended that anti-corrosion protection should be applied to the inside of the inter-accumulator so as to avoid its premature deterioration. As an option **DOMUSA TEKNIK** supplies electronic cathodic protection that is suitable for the **ACQUA** range. To install it, read carefully the assembly instructions that are provided with the same.

2 LIST OF COMPONENTS

ACQUA-DUO ME 110 EC

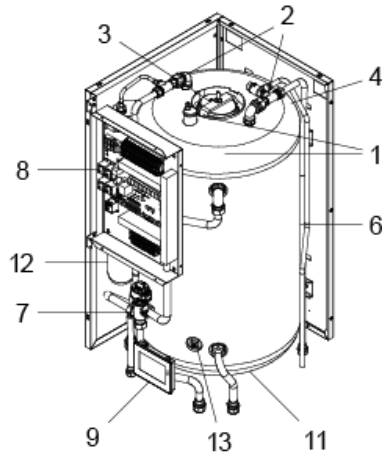

ACQUA-TRIO ME 110 EC

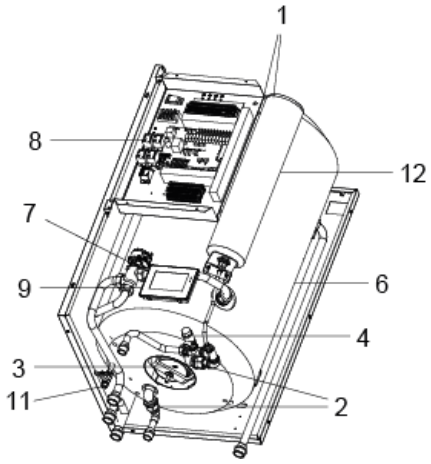

ACQUA-DUO SE 170 EC

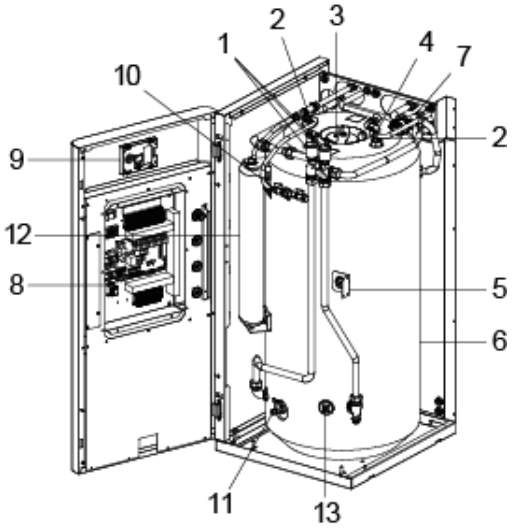

ACQUA-TRIO SE 170 EC

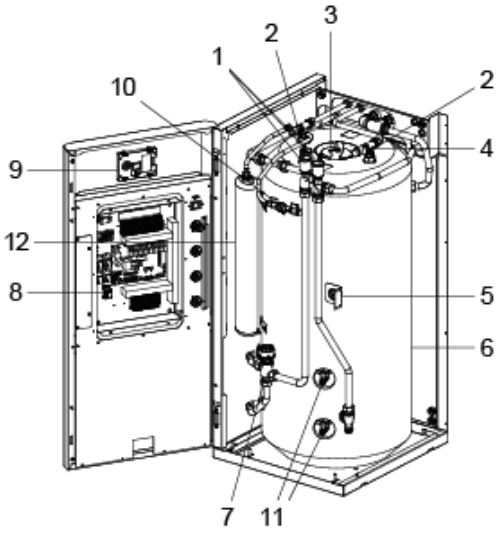

1. Air vent.
2. Dielectric sleeve.
3. Sensor immersion sleeve for DHW.
4. DHW safety valve.
5. Pressure gauge.
6. Storage tank.
7. Motorised 3-way diverter valve.
8. **Easy Connect** electronic module.
9. Control panel.
10. Filling disconnector.
11. Drain valve.
12. DHW expansion vessel.
13. Optional heating element connection.

3 INSTALLATION INSTRUCTIONS

The **ACQUA DUO EC/TRIO EC** hydraulic module must be installed in combination with a heat pump from the **DOMUSA TEKNIK DUAL CLIMA HT EC** product range. For this purpose, the hydraulic and electrical inputs/outputs of both equipment appliances must be interconnected. This sections presents a detailed description of the steps required for these interconnections.

3.1 Accessories supplied

The following accessories are supplied with the **ACQUA DUO EC/TRIO EC** hydraulic module, in a bag, along with the documentation. Before installing the equipment, ensure that you have received these and they are in good condition.

Documentation: The bag containing the documentation can be found inside the machine once the front is opened; this includes all the manuals and documents needed to install and operate the equipment.

Filter: Water filter for the installation. To ensure proper installation, carefully read the section titled *"Hydraulic installation"*.

Filling disconnector: The filling disconnector is standard equipment, except in the **ACQUA DUO ME 110 EC/TRIO ME 110 EC** models, where it is supplied in the bag of accessories, along with the documentation.

Strap: Strap to hold the DHW sensor of the heat pump inside the sensor immersion sleeve of the storage tank. For proper installation, read the section titled *"Assembly of the DHW sensor"* carefully.

Pressure gauge: A pressure gauge to measure the water circuit pressure in the heat pump. The pressure gauge is only included along with the documents bag supplied with models **ACQUA DUO ME 110 EC/TRIO ME 110 EC**.

Dielectric sleeve: The dielectric sleeve is standard equipment, except in the **ACQUA DUO ME 110 EC/TRIO ME 110 EC** models, where it is supplied along with the documents bag.

3.2 Placing and fastening

Maintenance, internal cleaning and, if necessary, replacement of the heating element of **ACQUA** wall-mounted hydraulic modules will require clearance under the water intake and outlet pipes. Likewise, **ACQUA** floor-mounted hydraulic modules will require clearance between the top of the equipment and the ceiling or any fixed object for the same reasons.

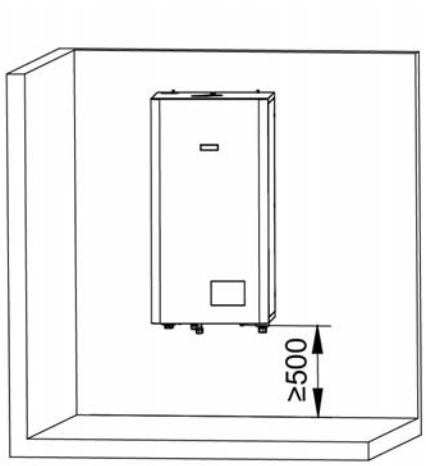

ACQUA TRIO ME 110

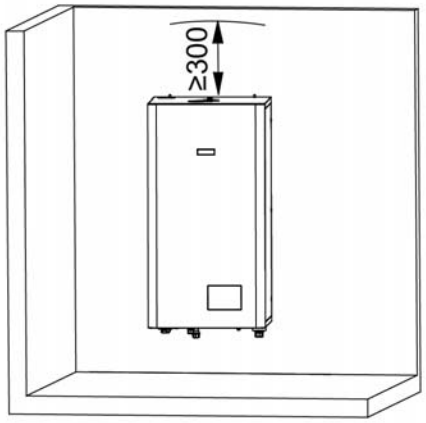

ACQUA DUO ME 110

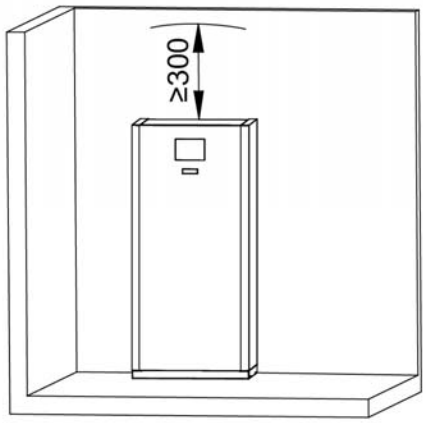

ACQUA TRIO SE 170

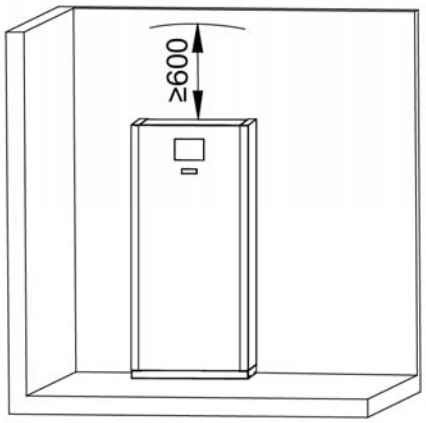

ACQUA DUO SE 170

IMPORTANT: The **ACQUA DUO ME 110 EC** module must be mounted on the wall with the hydraulic inlets facing upwards.

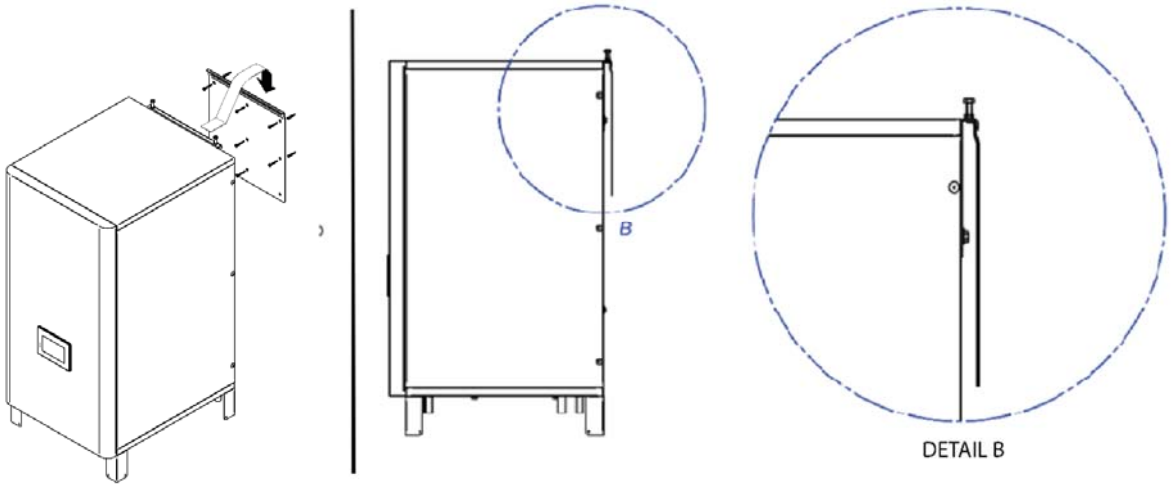

TABLE OF WALL-MOUNTED MODULE WEIGHTS	
MODEL	WEIGHT WHEN FULL
ACQUA DUO ME 110 EC /TRIO ME 110 EC	220 Kg

There are several mounting options, depending on the type of wall:

- Thin walls (plasterboard wall)
  Threaded rods measuring ø 10 mm passing through the wall and joined by sidings or plates.
- Hard, thick walls (concrete, stone, brick)
  Seal the ø 10 mm bolts or drill holes to place ø 10 mm plugs adapted to the wall.

After mounting the hydraulic module on the wall and connecting it to the mains water supply, fill it with water and make sure that the wall withstands the weight with ease.

ATTENTION:

- **Bear in mind the weight of the module full of water when choosing where to place it.**
- **Use appropriate handling items.**
- **Take the necessary load handling protection measures.**
- **Install the water tank in a place protected from freezing.**
- **If the tank is installed outside the living quarters (cellar, garage, etc.), the pipes should be insulated.**
- **Place a water tray under the tank when it is mounted over a false ceiling, in an attic or over living quarters.**
- **A drain pipe must be connected to the drain at an angle and protected from freezing.**
- **Do not install outdoors.**

NOTE: After mounting the module on the wall, the mounting protection legs can be removed.

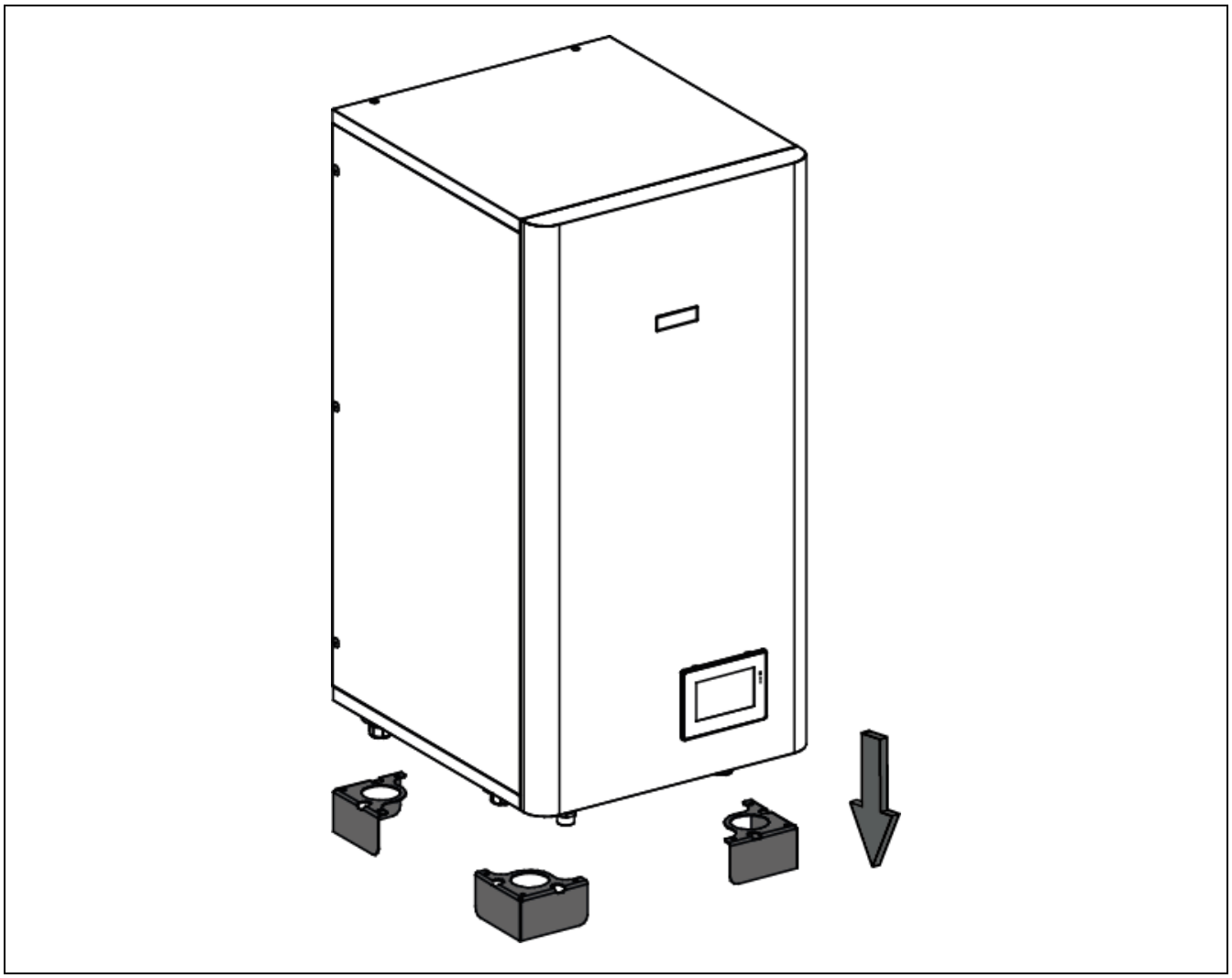

3.3 Hydraulic installation

The hydraulics must be installed by qualified personnel according to current installation regulations and taking into account the following recommendations:

- The hydraulic connections between the **ACQUA DUO EC/TRIO EC** module and the **DUAL CLIMA HT EC** heat pump can be made by using 2 properly insulated pipes to connect the **IBC** and **RBC** connections of the module (see *"Sketch and Dimensions"*) with the flow and return connections of the heat pump, respectively.
- All water circuit pipes **MUST** be insulated to prevent condensation during cold mode operation and loss of cooling and heating capacity, as well as to prevent the outdoor pipes from freezing during the winter. The pipe insulation should have a minimum thickness that complies with current regulations and preferably be a closed cell insulation or vapour barrier insulation. In outdoor areas, the insulation should be protected from the deteriorating effects of the sun.
- A **water filter** should be installed in the heat pump water circuit to prevent clogging or narrowing caused by dirt in the installation. The filter **MUST BE** installed in the equipment's return line before filling the installation with water to prevent dirty water from entering the heat exchanger (condenser). **It is recommended to place this filter between two shut-off valves so cleaning can be performed without having to drain the installation completely**. The filter should be appropriate for the specific characteristics of each installation (water pipe types and materials, type of water used, volume of water in the installation and so on). In new installations, it is recommended to examine the water filter during the first few months after commissioning the equipment; nonetheless, it must be examined and cleaned if necessary at least once a year.
- Shut-off valves should be installed between the installation and the hydraulic module in order to simplify maintenance tasks. **In wall-mounted models, it is recommended to install shut-off valves at the intake and outlet of DHW to drain the storage tank when maintenance is required.**
- Air vents and other devices should be placed for proper removal of air from the circuit during the water filling stage.
- Proper operation of the **ACQUA DUO EC/TRIO EC** hydraulic module requires that it be installed in combination with a **DUAL CLIMA HT EC** heat pump; therefore, please follow the instructions included in the heat pump installation manual, in addition to the recommendations listed above.
- The filling disconnector is needed to fill the primary circuit. Make the connections between the primary circuit and a domestic hot water point to the filling disconnector can be used to fill the circuit.

3.4 Product installations

ACQUA DUO ME 110 EC

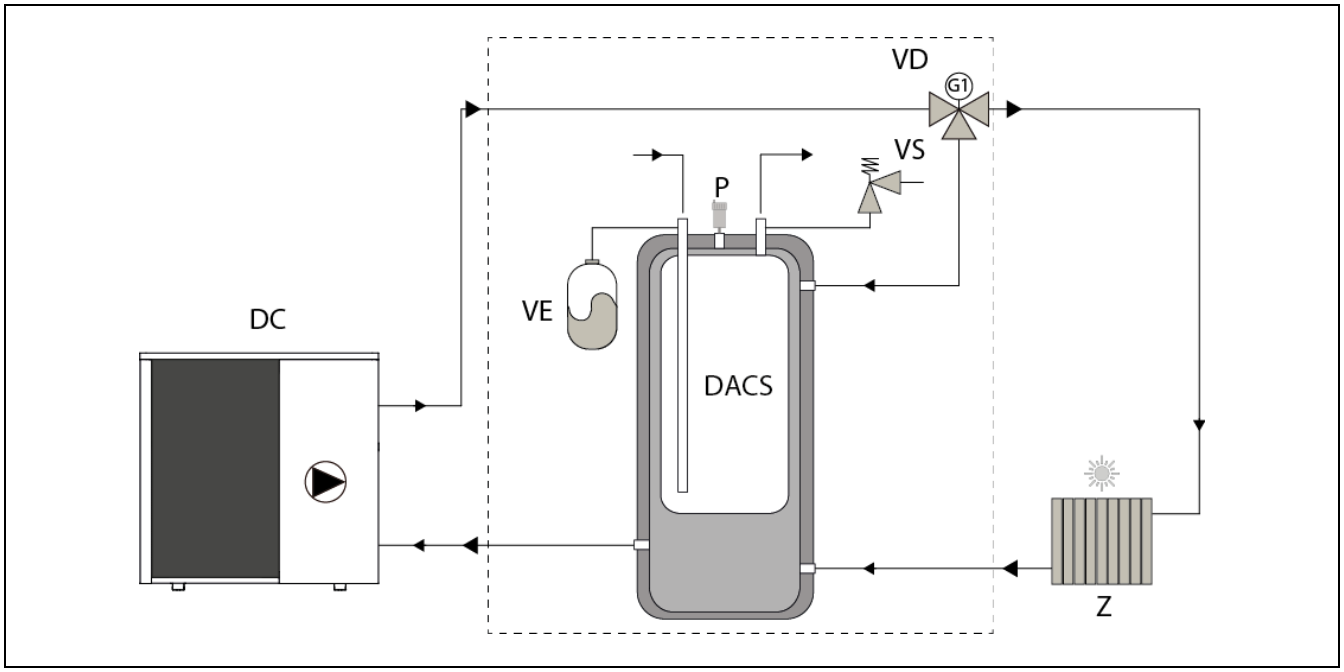

ACQUA TRIO ME 110 EC

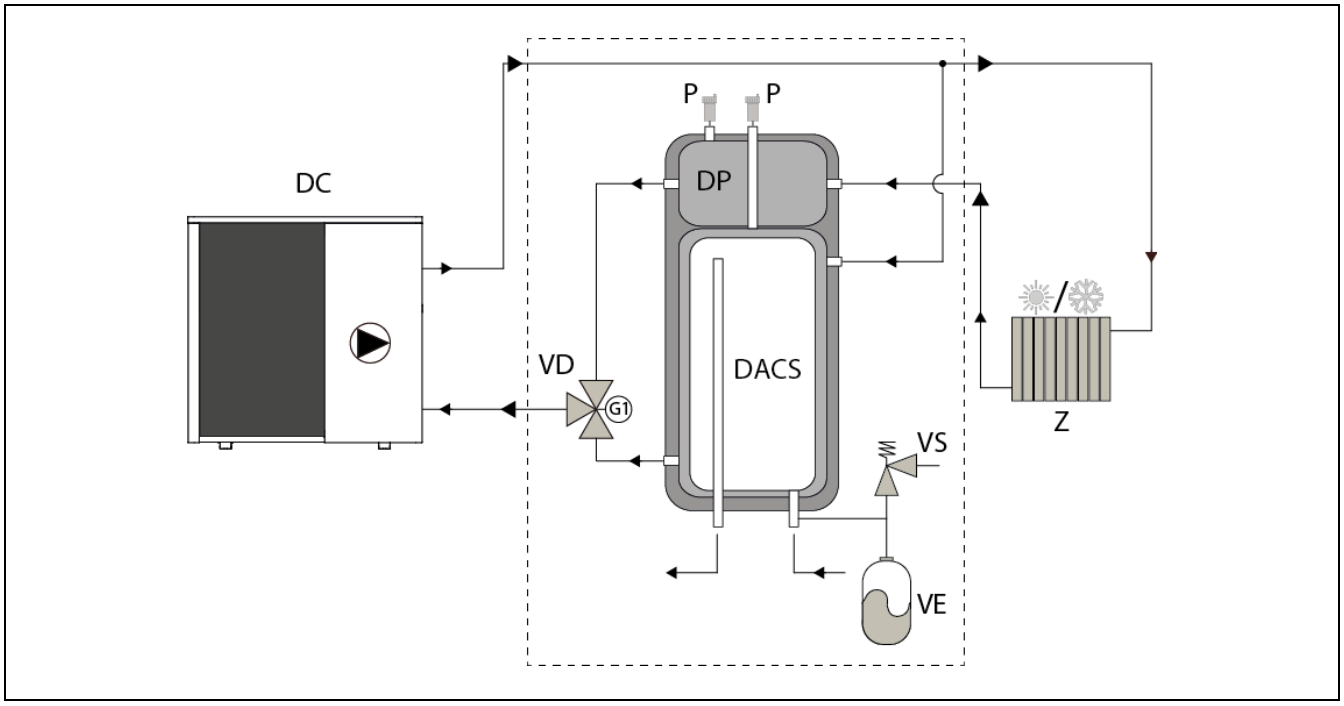

ACQUA DUO SE 170 EC

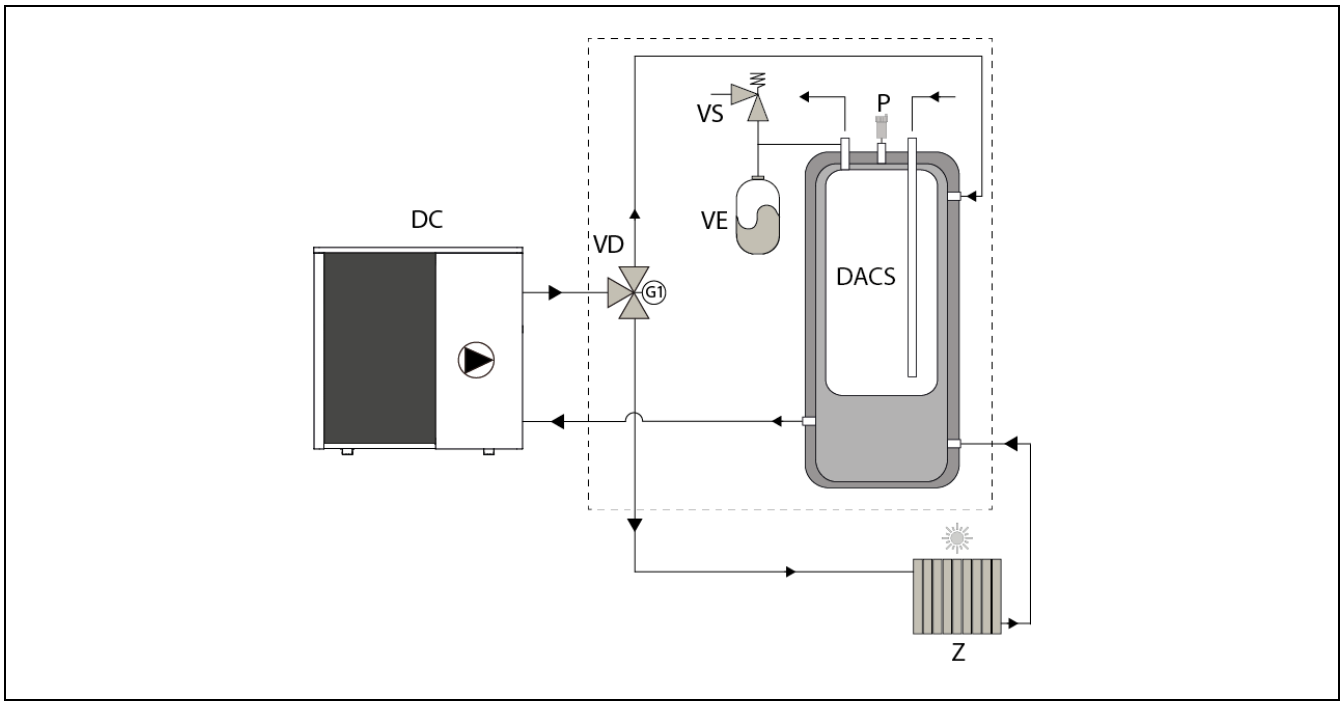

ACQUA TRIO SE 170 EC

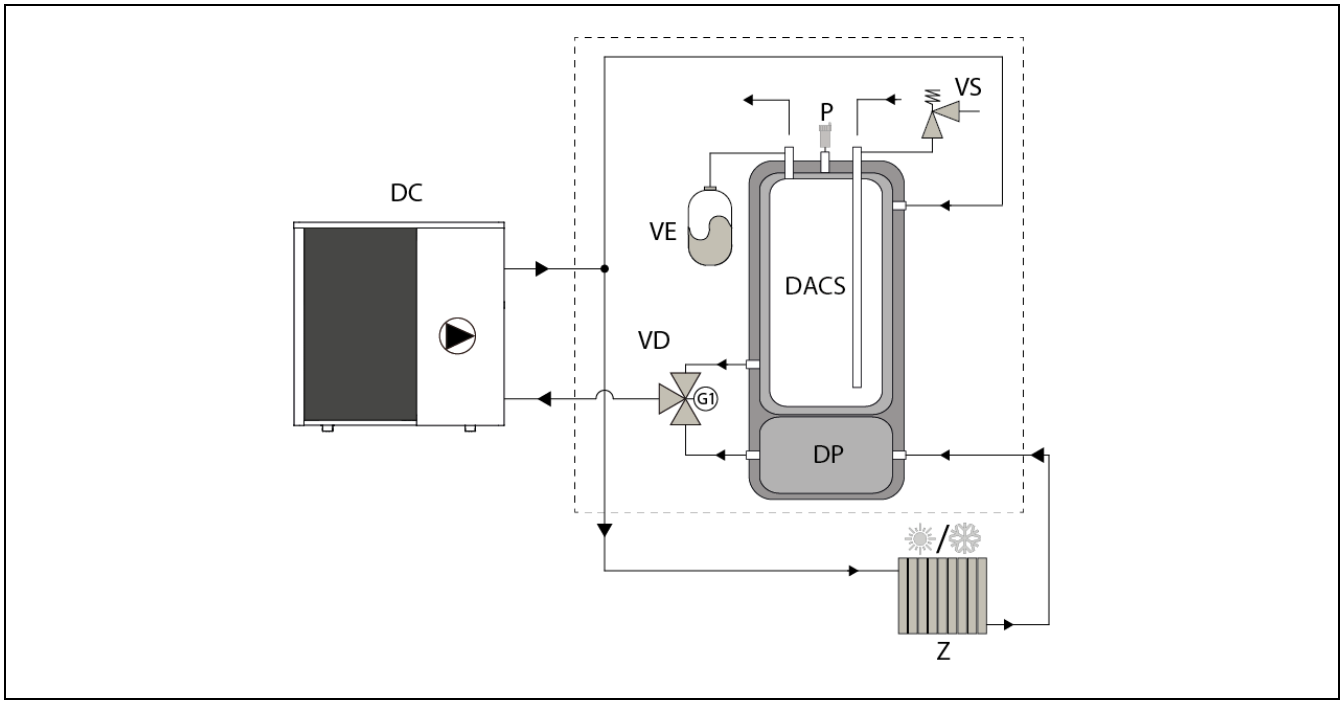

VD: DHW heating/cooling inverter valve.

Z: Heating/Cooling transmitter.

DACS: DHW storage tank.

DP: Primary circuit "buffer" storage tank.

DC: DUAL CLIMA HT heat pump.

VE: DHW expansion vessel.

VS: DHW safety valve.

P: Automatic air vent.

3.5 Electrical power supply of the internal module

The electrical installation of the **ACQUA DUO EC/ACQUA TRIO EC** module must be performed by qualified personnel according to the corresponding current regulations. The electrical connections must be made in such a way that the module can be completely isolated and disconnected to perform all maintenance tasks in safe conditions.

The hydraulic module has several cable feedthroughs at the rear for the insertion of the wiring inside the equipment. The wiring exposed to outdoor weather conditions must be protected by cable ducts or sleeves or be appropriate for use outdoors (H07RN-F type cable or superior). It is also advisable to keep a minimum distance of 25 mm between power cables (general power supply, diverter valves, backup heating elements, circulation pumps, etc.) and communication and sensor cables (communication cables between units, temperature sensors, room sensors, etc.) and run them through separate tubes.

ACQUA ME EC

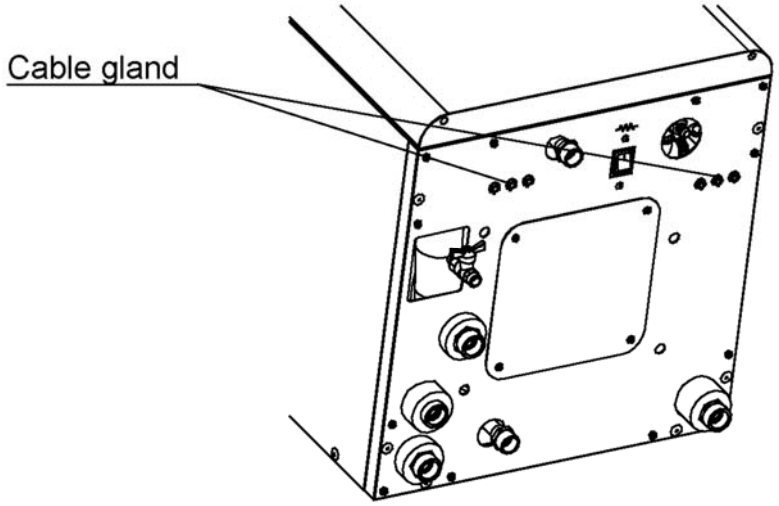

ACQUA SE EC

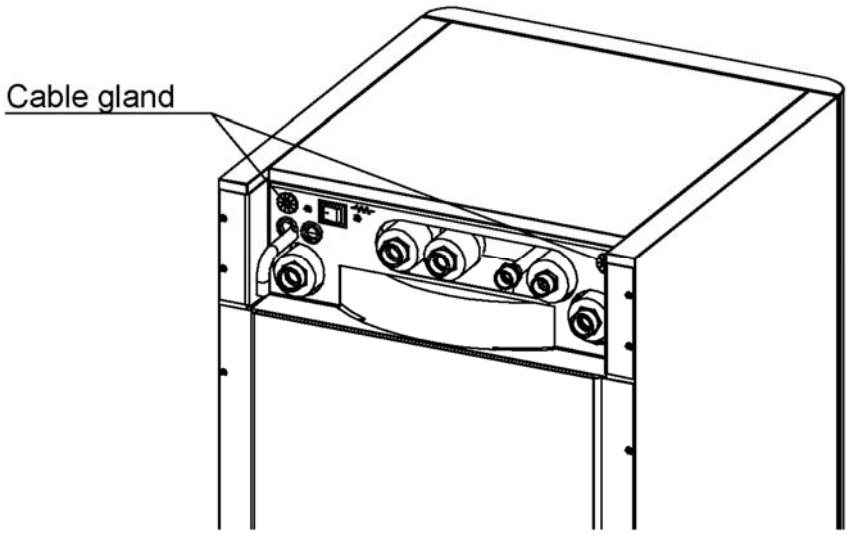

The **ACQUA DUO EC/ACQUA TRIO EC** internal unit includes an **Easy Connect** electronic communications module located inside the front door. This is accessed by removing the cover at the rear of the door. The **Easy Connect** module is ready to be connected electrically to the 230 V~ 50Hz voltage at terminals **L** and **N** on the connections terminal strip. **The equipment must be connected to ground.**

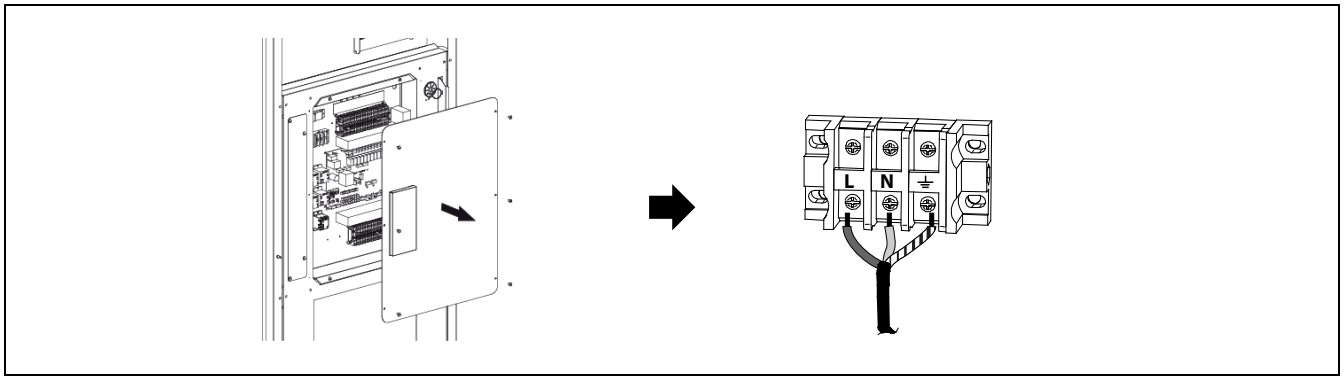

The maximum consumption of the electronic card in the **Easy Connect** module is **5 A**; therefore, **the sum of maximum electrical consumption of all connected accessories must not exceed that amount**, except for the connections of the backup heating elements **E1** and/or **E2**. This is because the **Easy Connect** module is equipped with power relays that allow a maximum consumption of **20 A**. The sum of maximum electrical consumption of all connected accessories (backup heating elements, circulation pumps, diverter valves, etc.) must be taken into account for the calculation of the cable section of the main power supply, as well as the fuses and circuit breakers protecting the electrical installation. The dimensions of the power supply cables must comply with current standards and regulations.

IMPORTANT: Whenever any work is done on the electrical installation, make sure it is disconnected from the main electrical supply network.

3.6 Assembly and connection of the control panel

For the **ACQUA DUO EC / ACQUA TRIO EC** hydraulic module to work properly, the control panel supplied with the **DUAL CLIMA HT EC with the Easy Connect communications module** external unit must be connected. Take the following steps to install it correctly:

1. Open the door of the **ACQUA DUO EC/ACQUA TRIO EC** module and insert the control panel of the **DUAL CLIMA HT EC** heat pump in the housing provided for it in the module door.

ACQUA ME EC

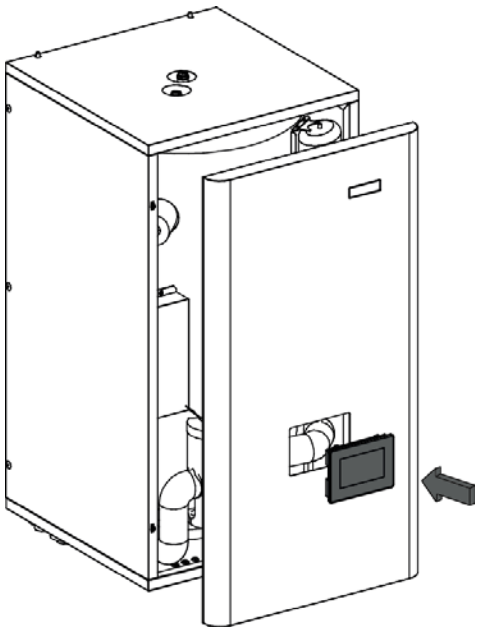

ACQUA SE EC

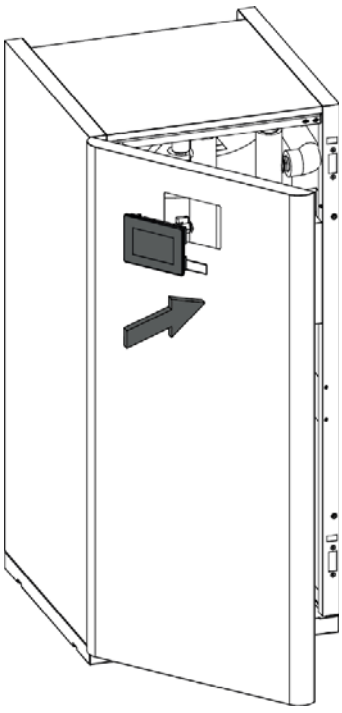

2. Turn the fastening brackets at the rear of the control panel and tighten the screws until it is firmly secured.

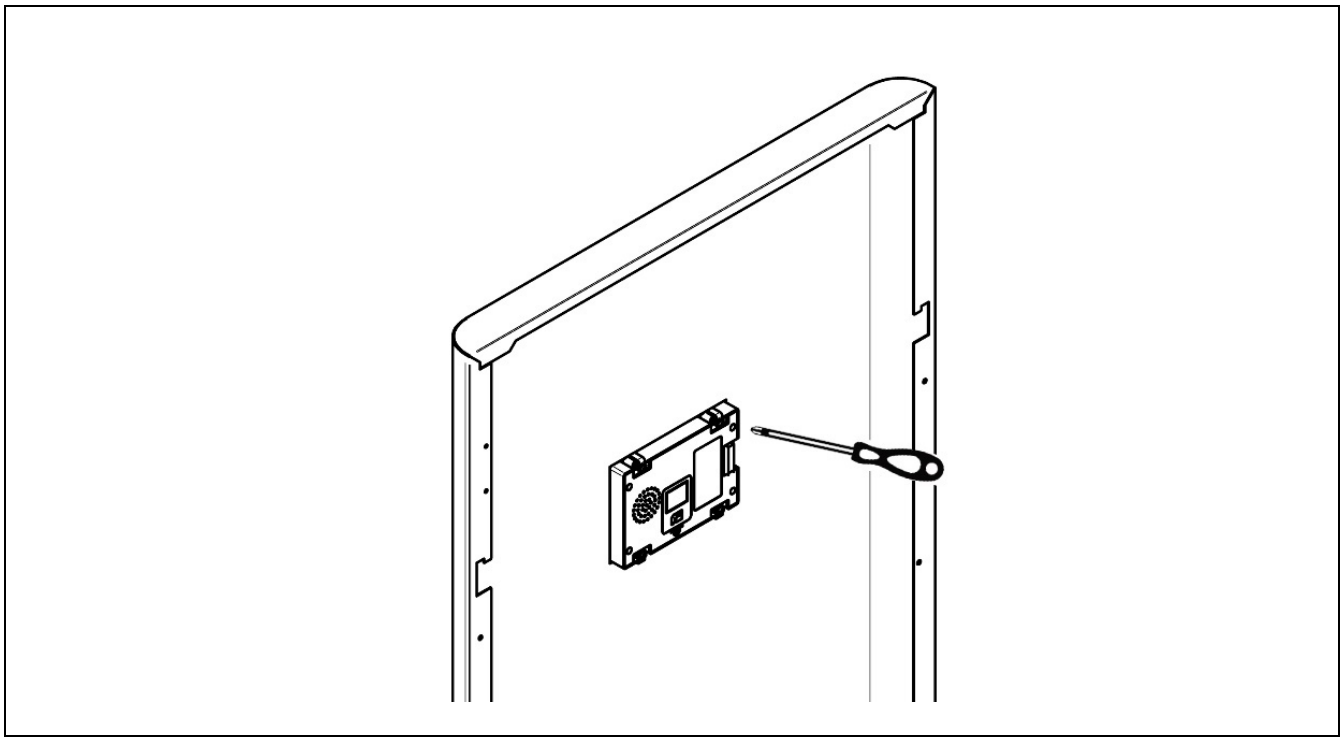

3. **Remove the Easy Connect communications module connection cable and connect the terminal block to the connector on the back of the control unit. See the section "Connecting the control unit" in the DUAL CLIMA EC instruction manual.**

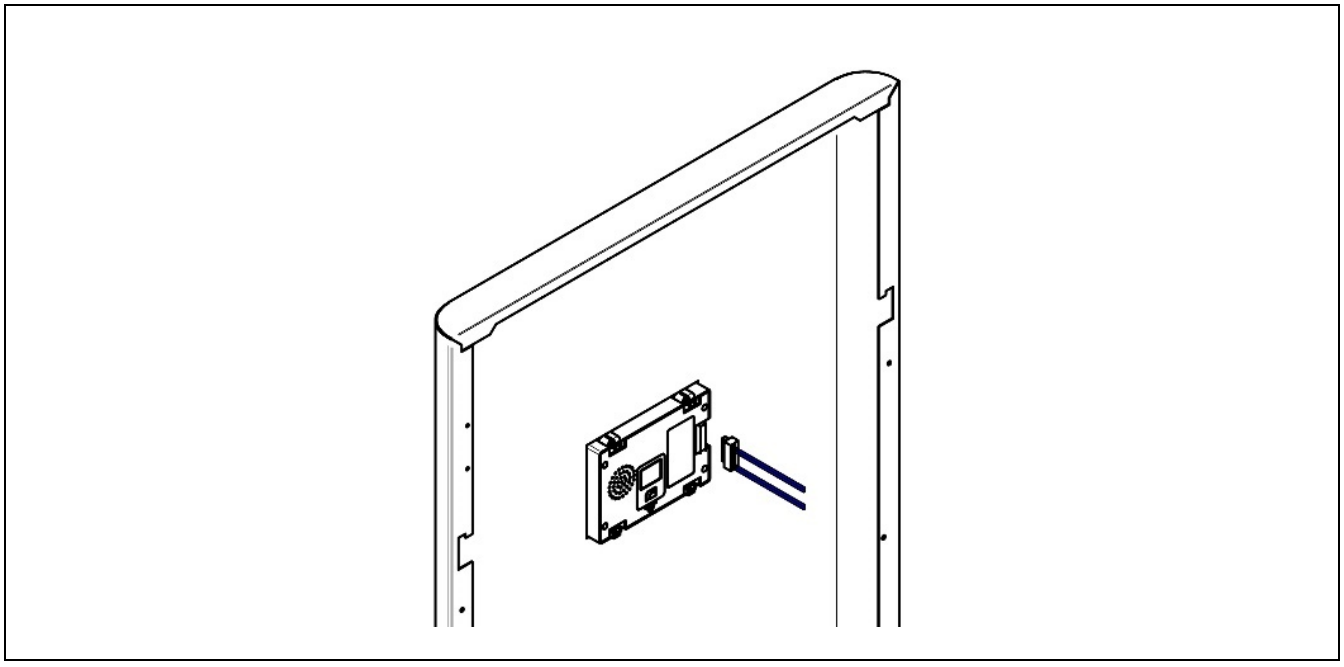

DANGER: Whenever any work is done on the electrical installation of the heat pump, make sure it is disconnected from the main electrical supply network.

IMPORTANT: Make sure that the length of the cable inside the module is enough to enable opening of the front cover.

3.7 Communication with the external unit

To ensure proper operation, the **Easy Connect** communication module integrated in the **ACQUA DUO EC/ACQUA TRIO EC** hydraulic module must be connected to the **DUAL CLIMA HT EC** outdoor heat pump unit by a 2-wire communications cable. To connect properly, follow the instructions in the *"Connection to the outdoor unit"* section of the "Installation and Operation Instruction Manual" supplied with the **DUAL CLIMA HT EC** heat pump.

3.8 Assembly of the DHW sensor

For the **ACQUA DUO EC/ ACQUA TRIO EC** hydraulic module to work properly, the DHW temperature sensor must be inserted in the immersion sleeve provided in the module storage tank. This DHW sensor is supplied with the **DUAL CLIMA HT EC** heat pump and identified as the **"DHW TANK SENSOR"**. Take the following steps to install the DHW sensor correctly:

- Remove the cover of the module storage tank.
- Pass the DHW temperature sensor (**"DHW TANK SENSOR"**) to the cover of the storage tank.
- Insert the tip of the DHW sensor into the immersion sleeve provided on the cover of the storage tank. Make sure to insert the sensor until it comes into contact with the bottom of the immersion sleeve. Insert the strap (supplied in the bag of documents) into the opening in the immersion sleeve to secure the DHW sensor cable.
- Assemble the cover on the module storage tank.
- Route the **DHW TANK SENSOR** probe through the cable glands provided to the **Easy Connect** communications module.
- Remove the cover from the hydraulic module door to access the connections terminal strip of the **Easy Connect** communications module.
- To connect the electrical cable of the sensor, remove the heating element that is supplied and connected to terminal T13 (19 and 20) of the **X1** input terminal strip of the **Easy Connect** electronic communications module and connect the DWH sensor in its place (see "Electrical Diagram").
- When finished, place the cover again.

ACQUA DUO ME 110 EC

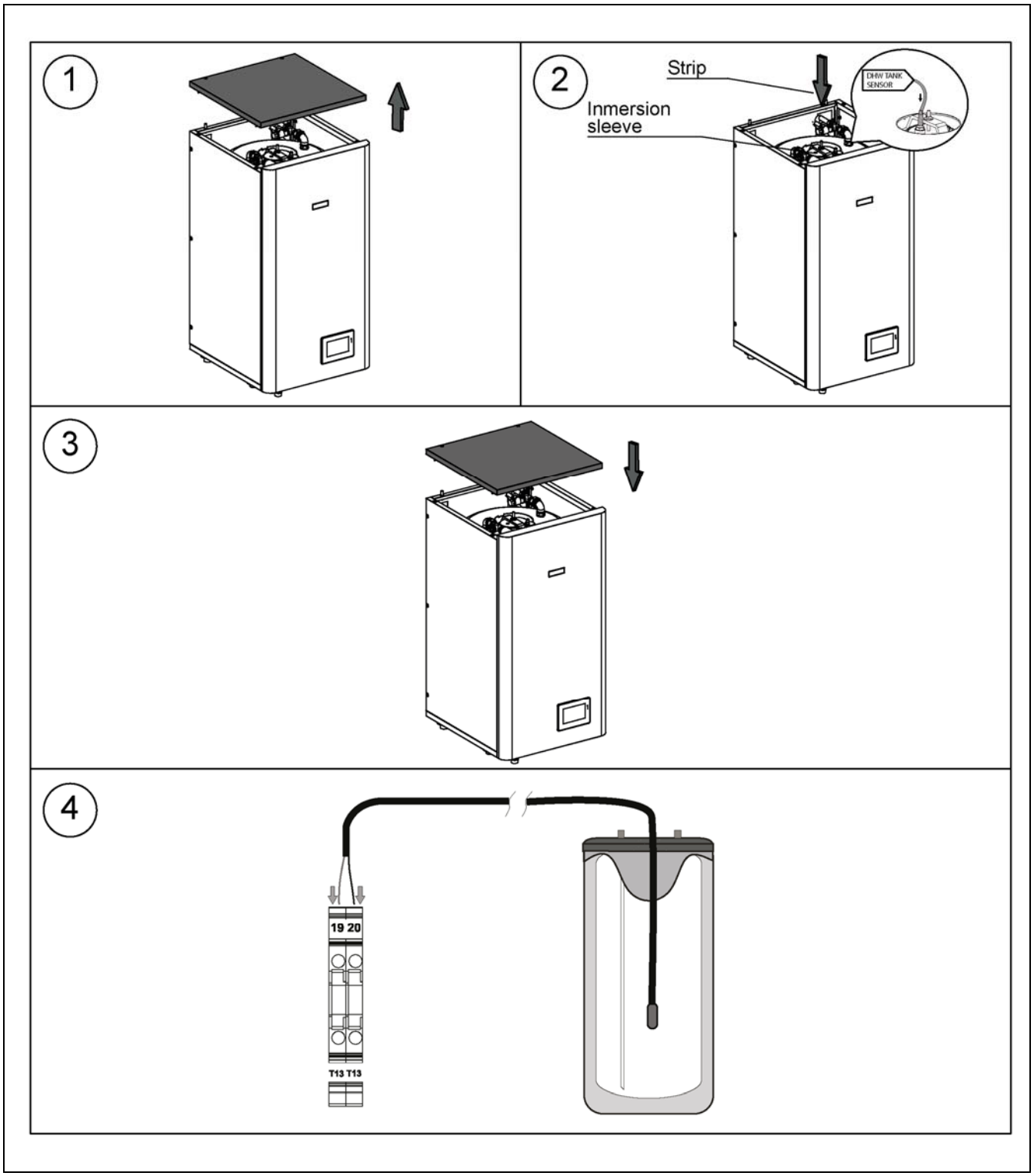

ACQUA TRIO ME 110 EC

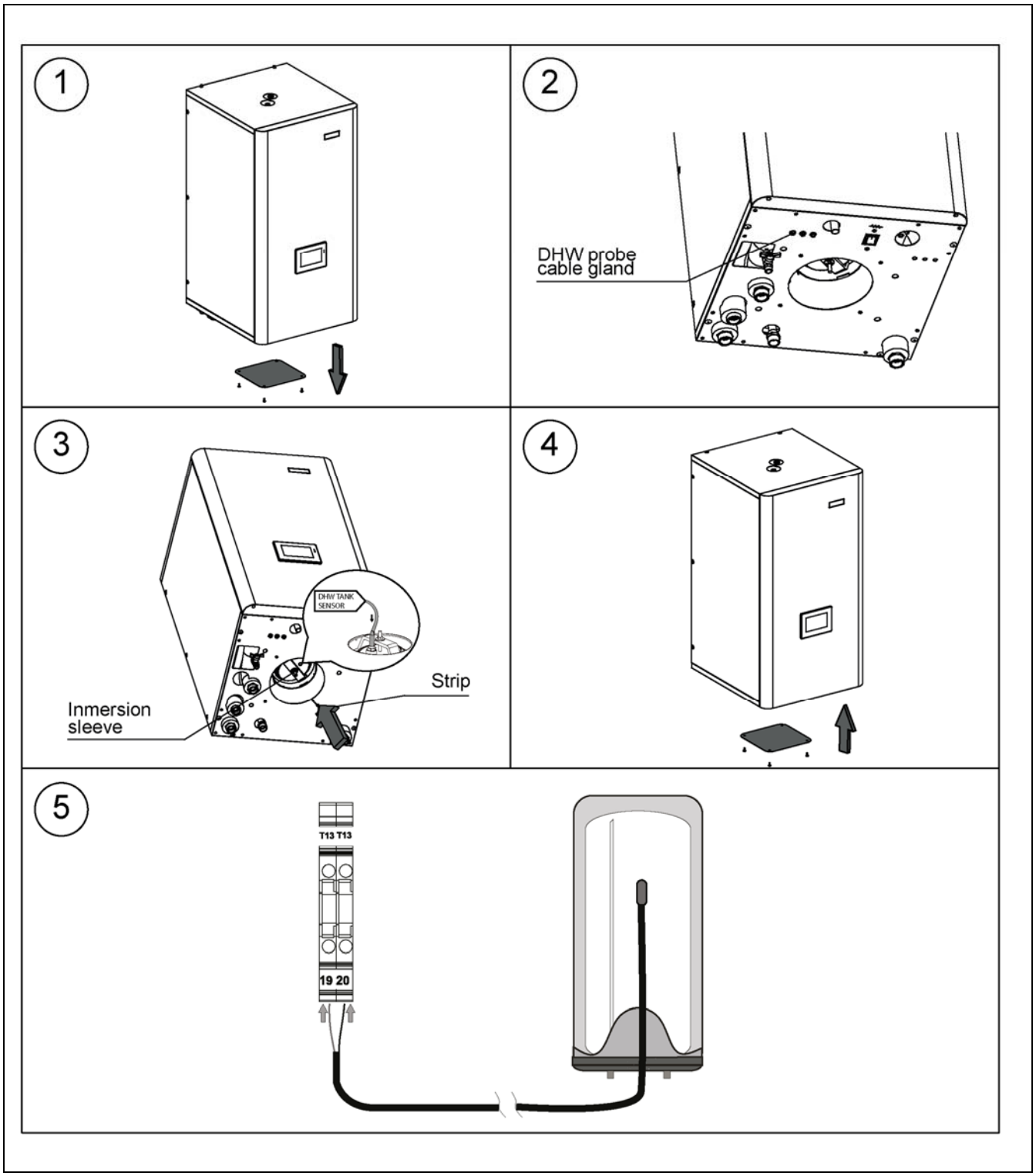

ACQUA SE EC

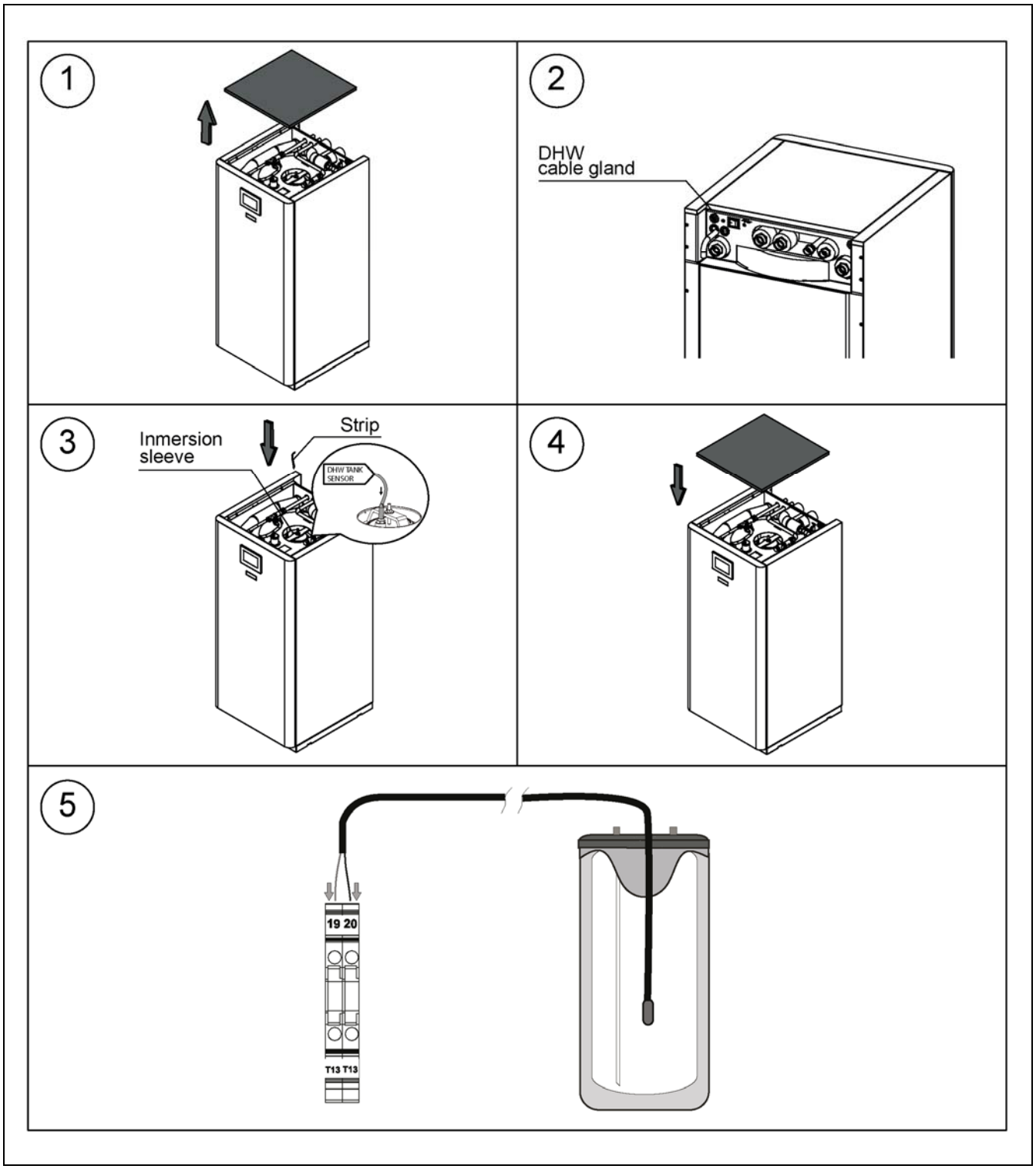

ATTENTION: Make sure to insert the sensor until it comes into contact with the bottom of the immersion sleeve.

ACQUA SE EC/ACQUA ME EC

5

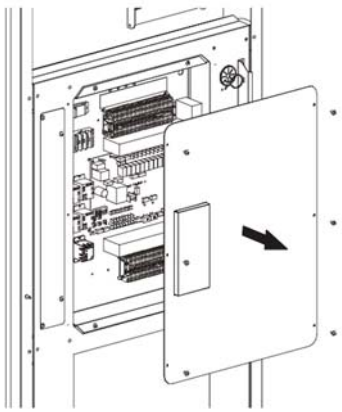

6

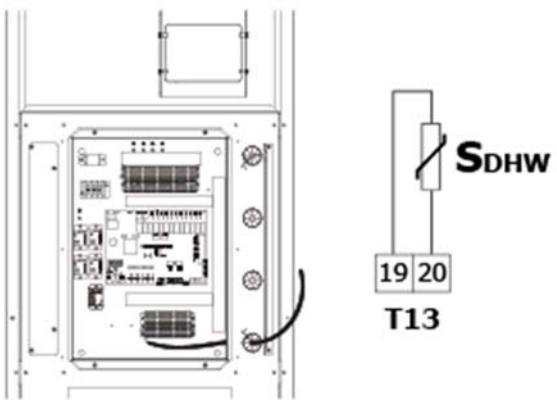

IMPORTANT: Whenever any work is done on the electrical installation, make sure it is disconnected from the main electrical supply network.

3.9 Filling the installation

The **ACQUA DUO EC/ACQUA TRIO EC** hydraulic module has a filling disconnector and pressure gauge that are used to fill the Heating/Cooling installation completely, including the external unit and DHW storage tank heat exchanger. The hydraulic installation also includes air vents and the hydraulic components required for correct filling.

Along with their **EC** documentation, models **ACQUA DUO ME 110 EC and ACQUA TRIO ME110 EC** are supplied with a filling kit consisting of a filling disconnector and a pressure gauge that should be installed in an accessible location. To fill, simply open the filling disconnector valves until the pressure gauge shows a pressure between 1 and 1.5 bar. The heat pump (external unit) is equipped with an automatic air vent at the top of the intake pipe of the heat exchanger (condenser). Open this air vent during filling and wait until water starts flowing out (refer to the Instruction Manual of the **DUAL CLIMA HT EC** heat pump). The rest of the installation must also be bled using the air vent valve provided for that purpose. Filling should be slow so the air can be evacuated from the water circuit. Once the installation is full, close the filling disconnector valves.

IMPORTANT: Starting up the heat pump with no water can cause serious damage to the equipment.

3.10 Draining

The **ACQUA DUO EC/TRIO EC** hydraulic module is provided with drain valves that are used to drain the water from the primary circuit or the DHW from inside the storage tank, depending on the model. To drain either circuit properly, connect a flexible hose to the corresponding valve and place the other end at a drain.

3.11 Draining the primary circuit

To drain the primary circuit installation, open the air vent valves in the Heating/Cooling installation to allow air to enter the circuit. After draining the circuit, close the valve and disconnect the flexible pipe.

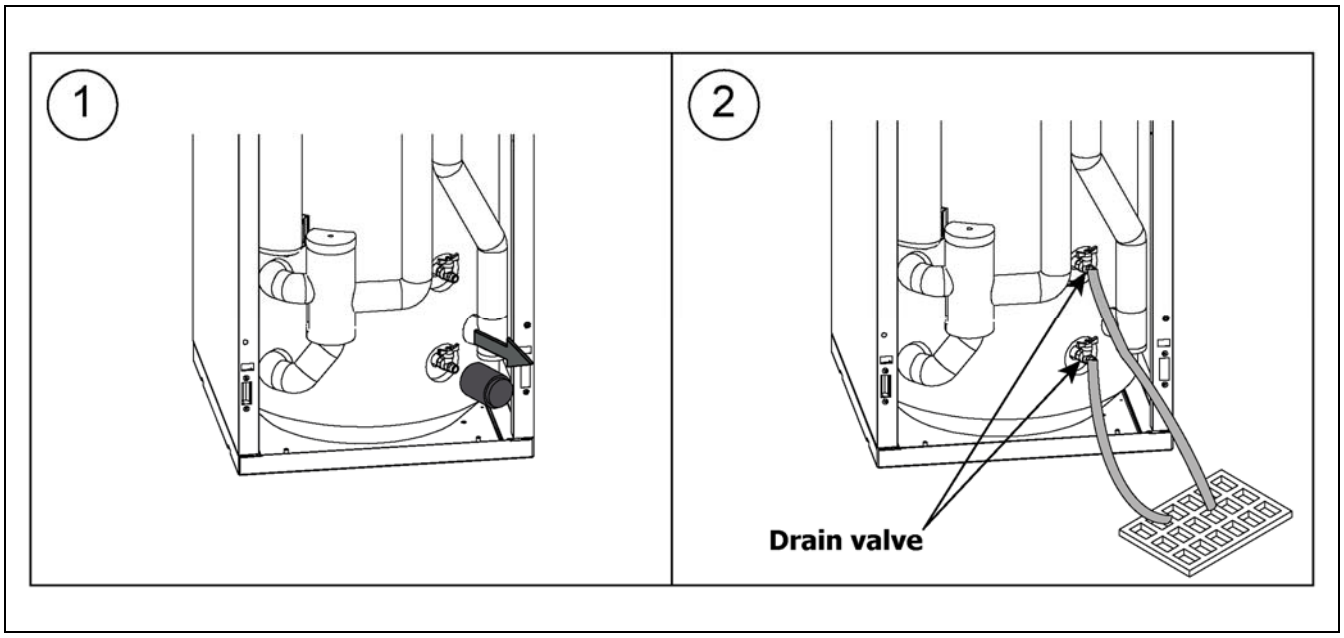

3.12 Draining the DHW storage tank

The DHW circuit of the tank must be depressurised before draining the tank.

To drain the DHW storage tank in models that are not provided with DHW drain valves, remove the storage tank's elliptical cover and insert a flexible hose into the tank.

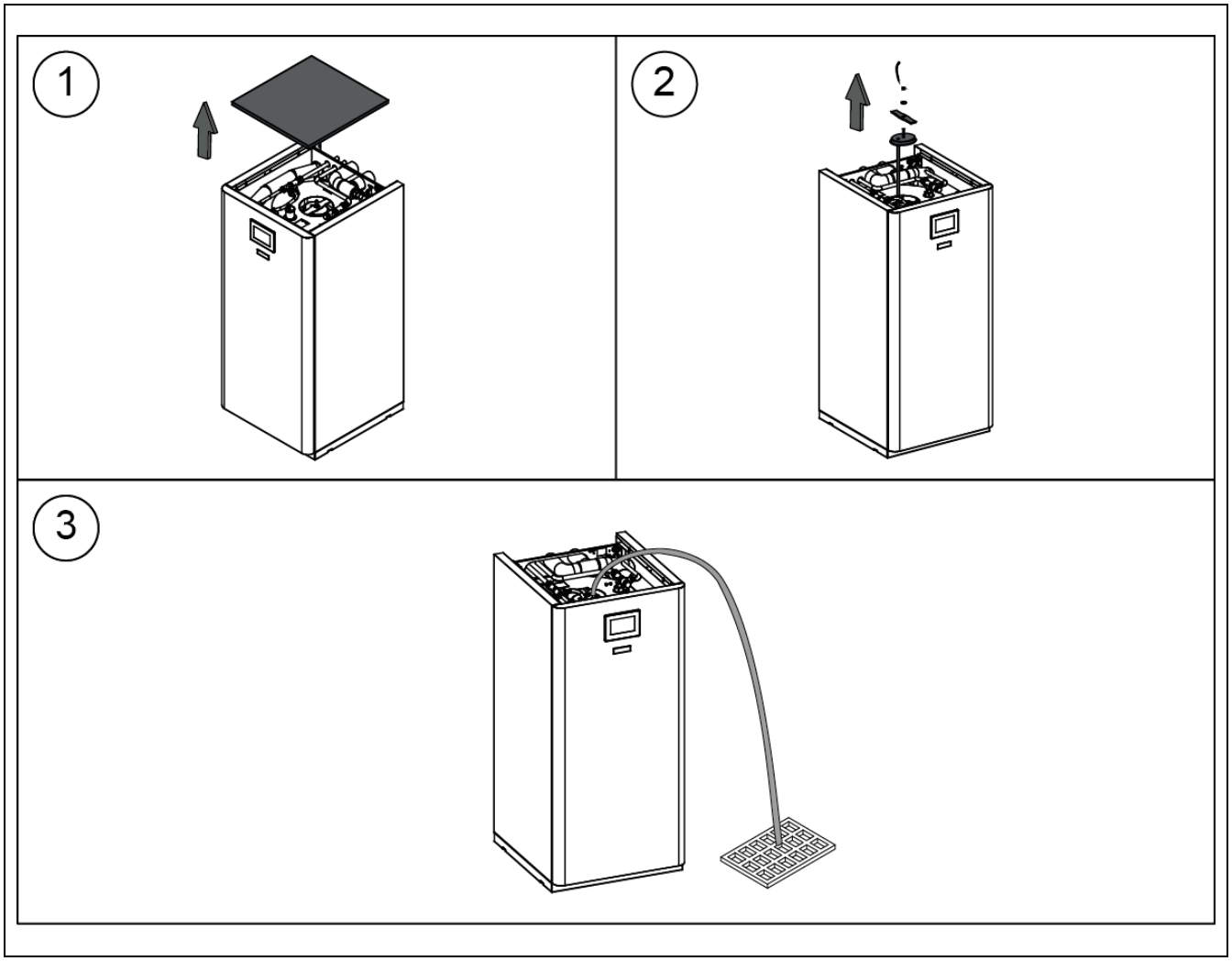

Place the other end of the hose on a nearby floor drain that is lower than the bottom of the tank. Place your mouth over the end of the hose, suck in slightly and remove the hose from your mouth to start water flowing and wait until the tank is completely empty.

4 OPERATION

The **ACQUA DUO EC/TRIO EC** hydraulic module is a passive accessory and, therefore, its operation is managed by the control unit of the **DUAL CLIMA HT** heat pump that is connected to it and which should be mounted on the front of the module (see *"Assembling and connecting the control panel"*). To ensure proper set-up and operation of the control panel, carefully read the "Installation and Operation Instruction Manual" supplied with the **DUAL CLIMA HT EC** heat pump.

The **ACQUA DUO EC/TRIO EC** hydraulic module has an internal stainless steel tank for the production of DHW and a primary circuit "buffer" tank.

The minimum requirement necessary to make the most of all the features of the hydraulic module is for the DHW and Heating and/or Cooling services to be activated.

When installed alongside a **DUAL CLIMA HT EC** heat pump, the **ACQUA DUO EC** module can be used in **DHW and heating** installations, in combination with fan coils, underfloor heating and radiators. It must be connected to a heating installation and a domestic hot water distribution network compatible with its performance and power features.

When installed alongside a **DUAL CLIMA HT EC** heat pump, the **ACQUA TRIO EC** module can be used in **DHW, heating and cooling** installations, in combination with fan coils, underfloor heating/cooling and radiators. It must be connected to a heating/cooling installation and a domestic hot water distribution network compatible with its performance and power features.

The **DUAL CLIMA HT EC** heat pump is configured in the factory to provide Heating, Cooling and DHW service. If the installation does not have one or more of these services, **THESE SHOULD** be disabled by changing the parameters in the control panel. When a service is disabled, all the operating modes referring to that service will disappear from the control panel.

5 OPTIONAL ACCESSORIES

To complete the performance features offered by the **ACQUA DUO EC/TRIO EC** storage hydraulic module, **DOMUSA TEKNIK** offers an optional range of accessories that can be included **inside** the module. The sections below provide an explanation about how to assemble and connect these accessories correctly.

5.1 Assembly and connection of optional accessories

In addition to the optional accessories described in the sections above and provided for assembly on the inside of the hydraulic module, the **Easy Connect** electronic control inside the door of the **ACQUA DUO EC/ACQUA TRIO EC** module is capable of managing a wide range of other accessories offered by **DOMUSA TEKNIK** (room sensor, external sensor, **OTC**, ambient temperature thermostats, an **E2** backup heating element, backup pumps, energy meter, buffer tank sensor, etc.). All of these can be assembled in the installation to expand its functionalities (managing a buffer tank, harnessing solar power, OTC operation, etc.).

For proper assembly, connection and start-up of these accessories, carefully read the instructions in the "Installation and operation instruction manual" supplied with the **DUAL CLIMA HT EC** heat pump.

Assembly of an E1 backup element for DHW E1 (Optional) Only for ACQUA TRIO EC models

The **ACQUA TRIO EC** hydraulic module can mount a backup heating element for the production of DHW inside the module. This **E1** heating element is activated by a power relay on the electronic communications module with a maximum consumption of **20 A**; therefore, it is not necessary to place a relay between the strip terminals and the DHW heating element Kit supplied optionally by **DOMUSA TEKNIK**. The sections below describe how to assemble and connect the Kit correctly

- Disassemble and remove the original elliptical cover of the DHW storage tank and replace it with the elliptical cover equipped with the backup element connection included in the kit.
- Mount the heating element on the elliptical cover of the KIT and seal the thread.
- Set the desired temperature of the DHW on the thermostat included in the heating element.
- Remove the cover from the hydraulic module door to access the connections terminal strip of the **Easy Connect** communications module.
- Connect the heating element to the **E1 (19 - 20)** terminals of the **X2** output terminal strip (see "Electric Diagram").
- Activate the IR element switch at the back of the door or at the bottom (depending on the model) by setting it to "I" for the DHW to be heated by the heating element or "0" for the DHW to be heated by the heat pump.
- For the DHW to be heated only by the heating element and the heat pump to run simultaneously in cooling mode, select **DHW MODE deactivated** on the heat pump control panel.

ACQUA TRIO ME EC

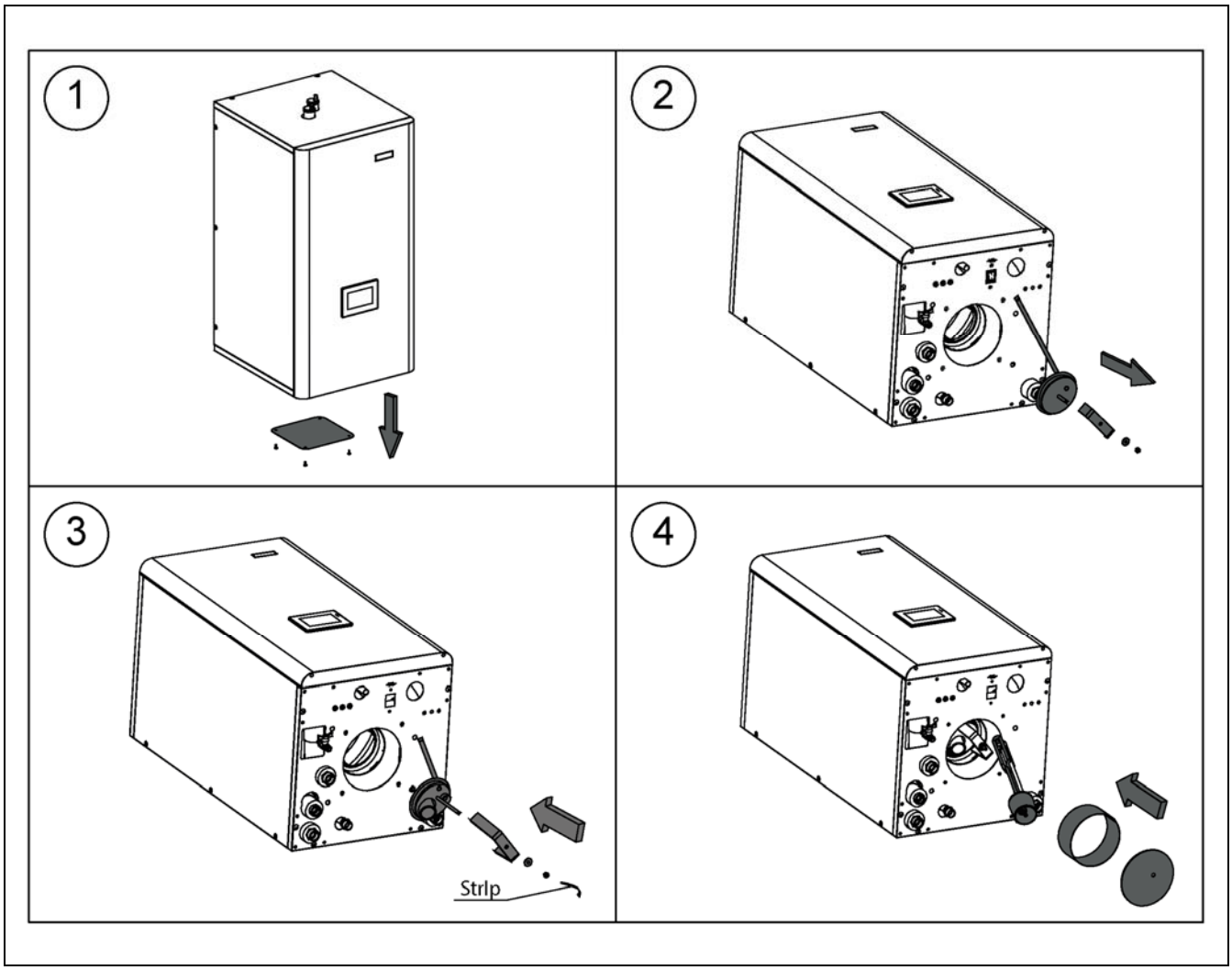

ACQUA TRIO SE EC

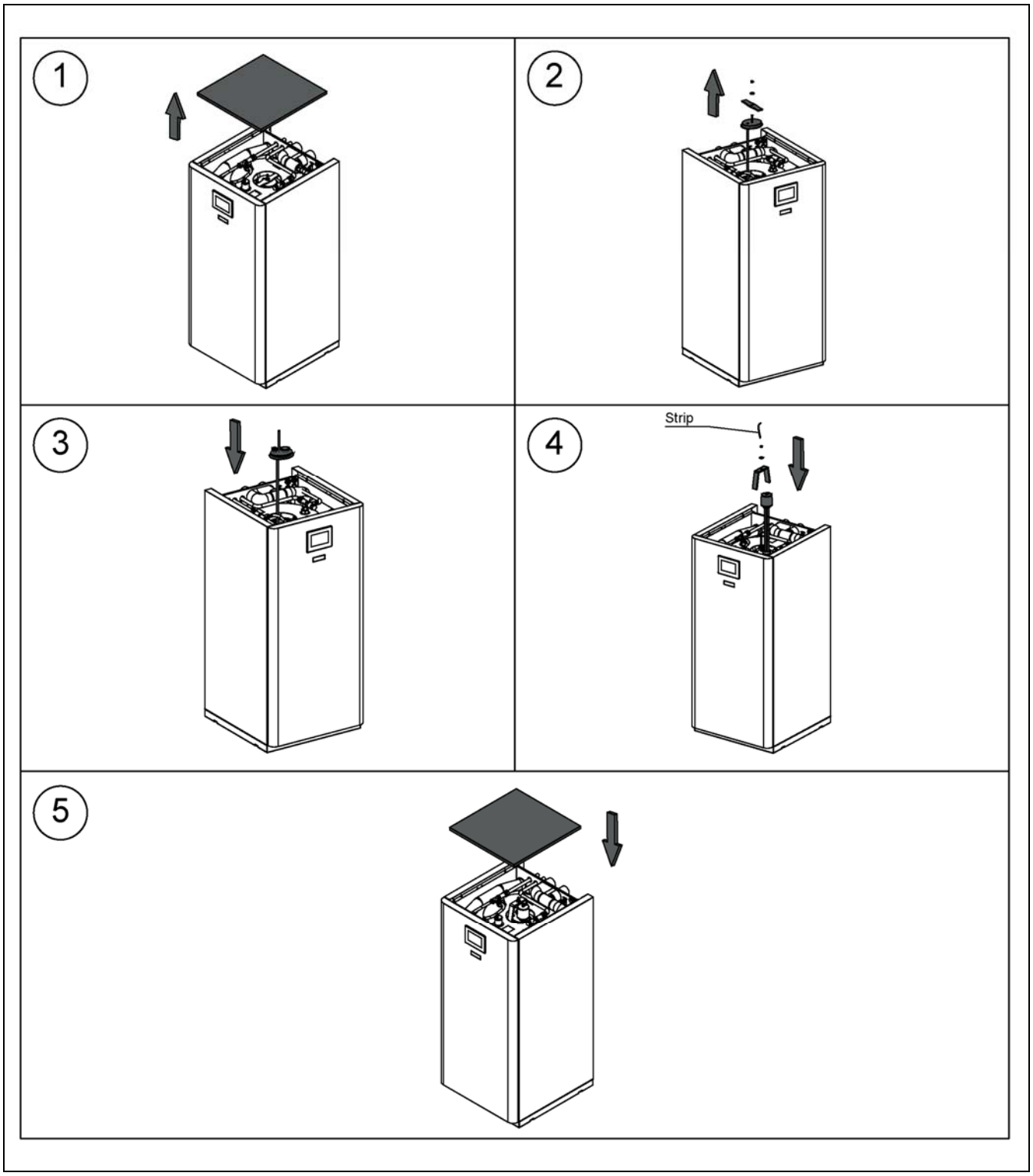

ACQUA TRIO SE EC/ACQUA TRIO ME EC

6

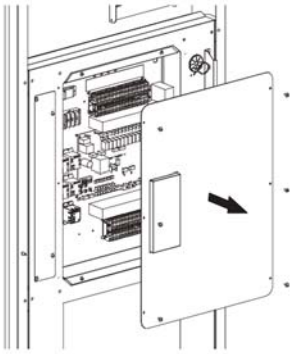

7

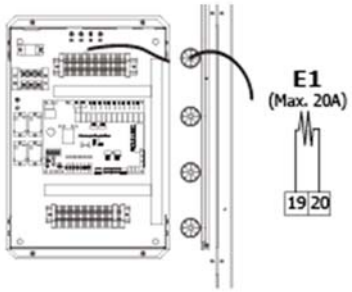

ATTENTION: When finished, place the cover again.

IMPORTANT: Whenever any work is done on the electrical installation of the hydraulic module, make sure it is disconnected from the main electrical supply network.

IMPORTANT: The maximum electrical consumption of the E1 backup heating element must be taken into account for the calculation of the cable section of the main power supply, as well as the fuses and circuit breakers protecting the electrical installation.

5.2 Mounting and connecting the backup element kit for Heating and DHW (only optional for the following models: ACQUA DUO ME 110 EC and ACQUA DUO SE 170 EC)

The **ACQUA DUO ME 110 EC** and **ACQUA DUO SE 170 EC** hydraulic modules allow the installation of a heating resistance **kit** for support for heating and DHW in the socket provided for this purpose located inside. This resistance heats the primary circuit and also the DHW accumulator, thus increasing the comfort performance required when external weather conditions require it. To activate this **E1 E2** resistance, the **Easy Connect** electronic communications module has a power relay with a maximum capacity of **20 A** consumption, so it will not be necessary to interpose a relay between the terminals of the terminal block and the resistance kit optionally supplied by **DOMUSA TEKNIK**. For the correct installation of the **Kit**, follow the following instructions:

- Dismount and remove the front cover of the **ACQUA DUO ME 110 EC** model or open the door in the **ACQUA DUO SE 170 EC** model to access the heating element plug.
- Dismount and remove the plug of the heating element connection and replace it with the heating element supplied with the Kit, making sure to seal it correctly.
- Set the desired temperature using the thermostat built into the resistor.
- Remove the cover from the hydraulic module door to access the **Easy Connect** communications module connection strips.
- Connect the resistor to terminals **E1, E2** of the **Easy Connect** communications module **RR** strip (see "Electrical diagram").
- Place the cover again or close the door.

IMPORTANT: The cable section and the electrical power supply must be appropriate for the heating element to withstand.

IMPORTANT: Whenever any work is done on the electrical installation of the heat pump, make sure it is disconnected from the main electrical supply network.

ACQUA DUO SE EC

1

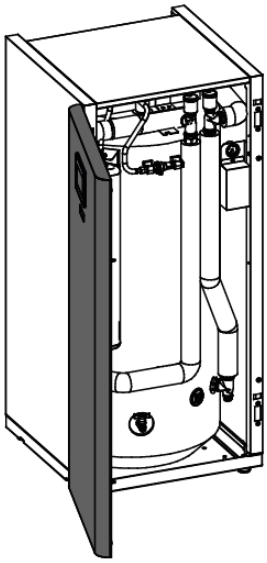

2

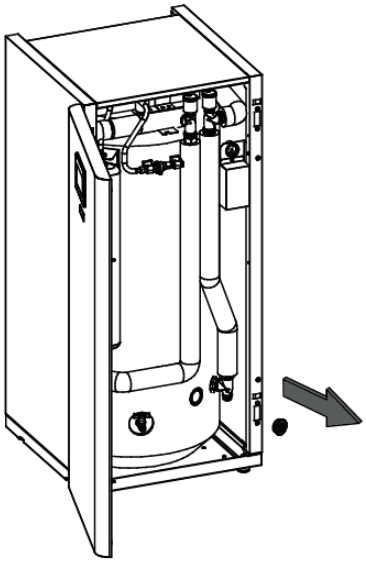

3

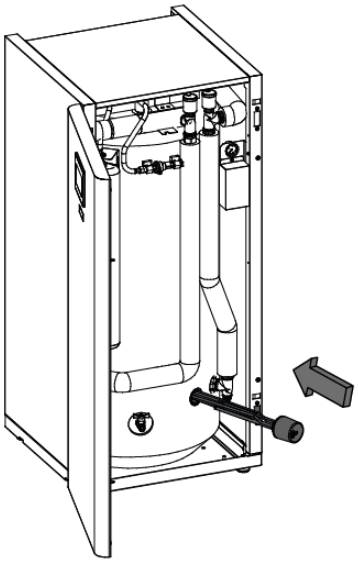

ACQUA DUO ME EC

1

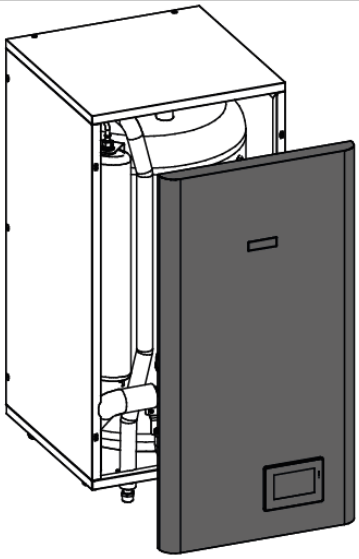

2

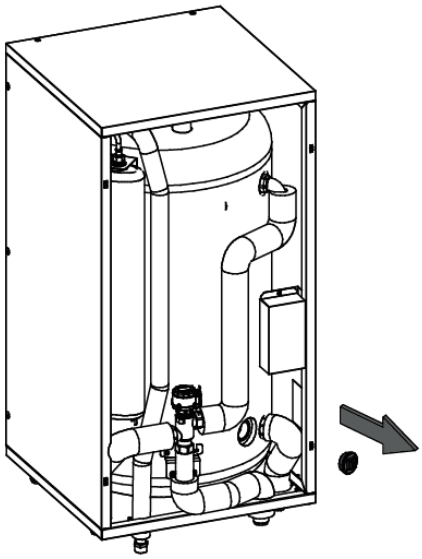

3

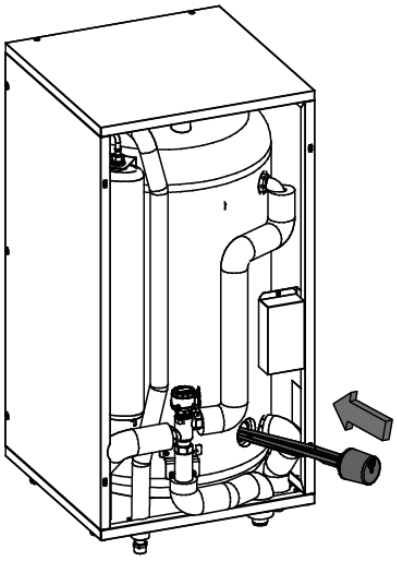

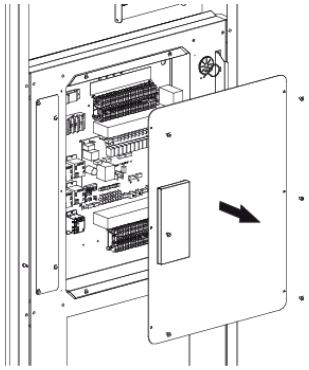

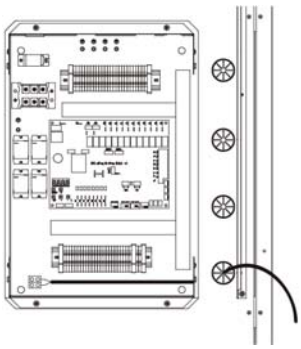

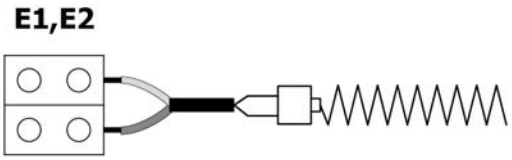

ATTENTION:
When finished, place the cover again.

5.3 Assembly and connection of a backup pump (optional)

The **ACQUA DUO SE EC** and **ACQUA TRIO SE EC** hydraulic modules allow the installation of a circulation **support pump kit** inside them to increase the water circulation flow if necessary, in addition to that obtained by the internal heat pump pump (**C1**). In the **ACQUA DUO SE EC** and **ACQUA TRIO SE EC** models, this pump must be installed outside the hydraulic module. This circulation pump will operate in parallel with the internal pump of the **DUAL CLIMA HT** heat pump when it is operating in Heating or Cooling mode and DHW charging.

To install the support pump inside the **ACQUA DUO SE EC/SE EC** and **ACQUA TRIO SE EC/SE EC** modules, a "spool" tube is incorporated inside the module to mount the optional pump offered by **DOMUSA TEKNIK**. This "spool" tube is located in the return tube to the heat pump. In the rest of the models, this circulation pump must be installed outside the module.

The electrical connection of the kit, inside the module, must be made in parallel to the pump (**C1**). To do this, connect the pump to terminals **C1** (**1-2**) of the output strip **X2** of the **Easy Connect** communications module (see "Electrical diagram"). In this way, this pump will **operate both in Heating/Air Conditioning mode and in DHW heating** together with the pump (**C1**). For correct installation, follow the instructions below:

1. Slit the insulating hose that protects the "reel" and remove it, as shown in the figure.

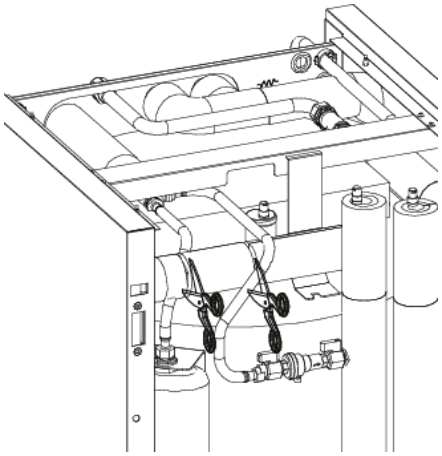

2. Dismount the "reel" and remove it.

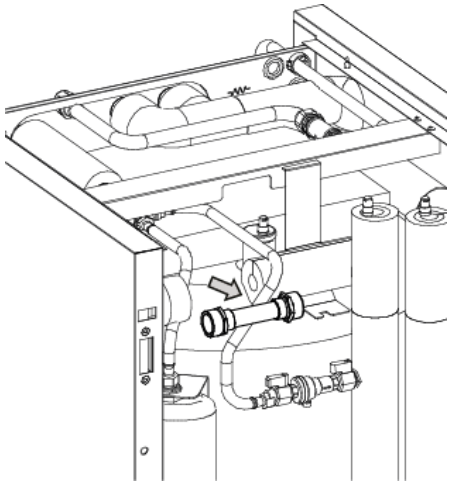

3. Assemble the circulation pump in its position, making sure that the direction of the flow is correct, as shown in the figure, and ensuring that the connections are properly sealed.

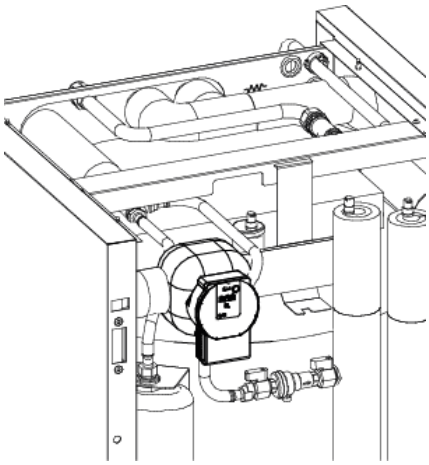

4. Connect the power cable, supplied with the kit, to the **DUAL CLIMA HT heat pump (connection only for the backup pump kit or when the pump is installed in the return or flow to the heat pump). In this case, the backup pump will operate in Heating/Air Conditioning and DHW**.

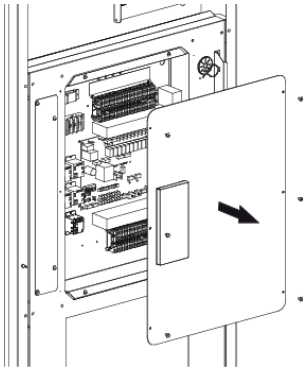

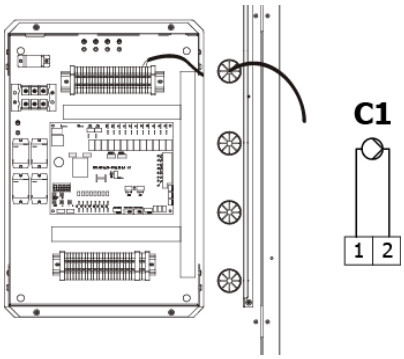

ATTENCION:
When finished, place the cover again.

NOTE: If the backup pump is installed in the flow or return pipe of the Heating/Air Conditioning system, the electrical connection of the hydraulic pump must be made to connection C2. To do this, connect the pump to terminals C2 (9-10) of the X2 output strip of the Easy Connect communications module. In this case, the backup pump will only work in Heating/Air Conditioning, see the following image:

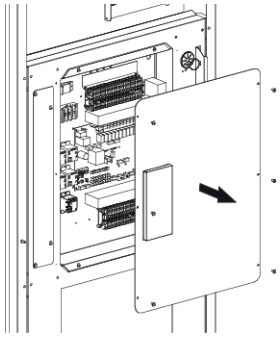

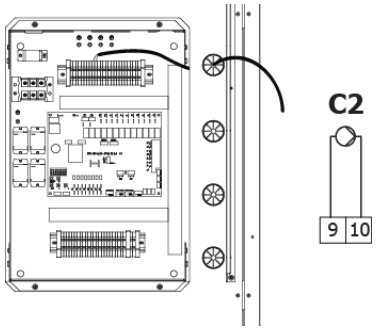

ATTENCION:
When finished, place the cover again.

The hydraulic module has a series of cable glands, through one of which the hose can be removed from the inside of the equipment.

6 ELECTRICAL DIAGRAM

IR: Heating element switch (only in **ACQUA TRIO EC** models).

RR Resistor Strip (only in **ACQUA DUO EC** models).

X1 Input Terminal Strip:

TAC: Heating Mode Thermostat.

TAF: Cooling Mode Thermostat.

Hu: Humidity Sensor.

SG1: Contact 1 for SG Ready Function.

SG2: Contact 2 for SG Ready Function.

A/B: **RS485** Communication with External Unit.

T2: Room Sensor.

T4: OTC Outdoor Sensor.

T6: Buffer Tank Sensor.

T12: Not in use.

T13: DHW Temperature Sensor.

HMI: Control panel.

X2 Output Terminal Strip:

C1: Main Backup Circulation Pump.

C2: Heating/Cooling Backup Circulation Pump.

C3: DHW Backup Circulation Pump.

C4: Installation Circulation Pump.

G1: Heating/DHW 3-way valve.

G2: Heat/Cold 3-way valve.

E2: Heating Backup element.

E1: DHW Backup Heating Element.

TA1: Zone 1 Room Thermostat.

TA1: Zone 2 Room Thermostat.

Z1: Zone 1 Circulation Pump.

Z2: Zone 2 Circulation Pump.

AQUA-DUO ME EC/SE EC

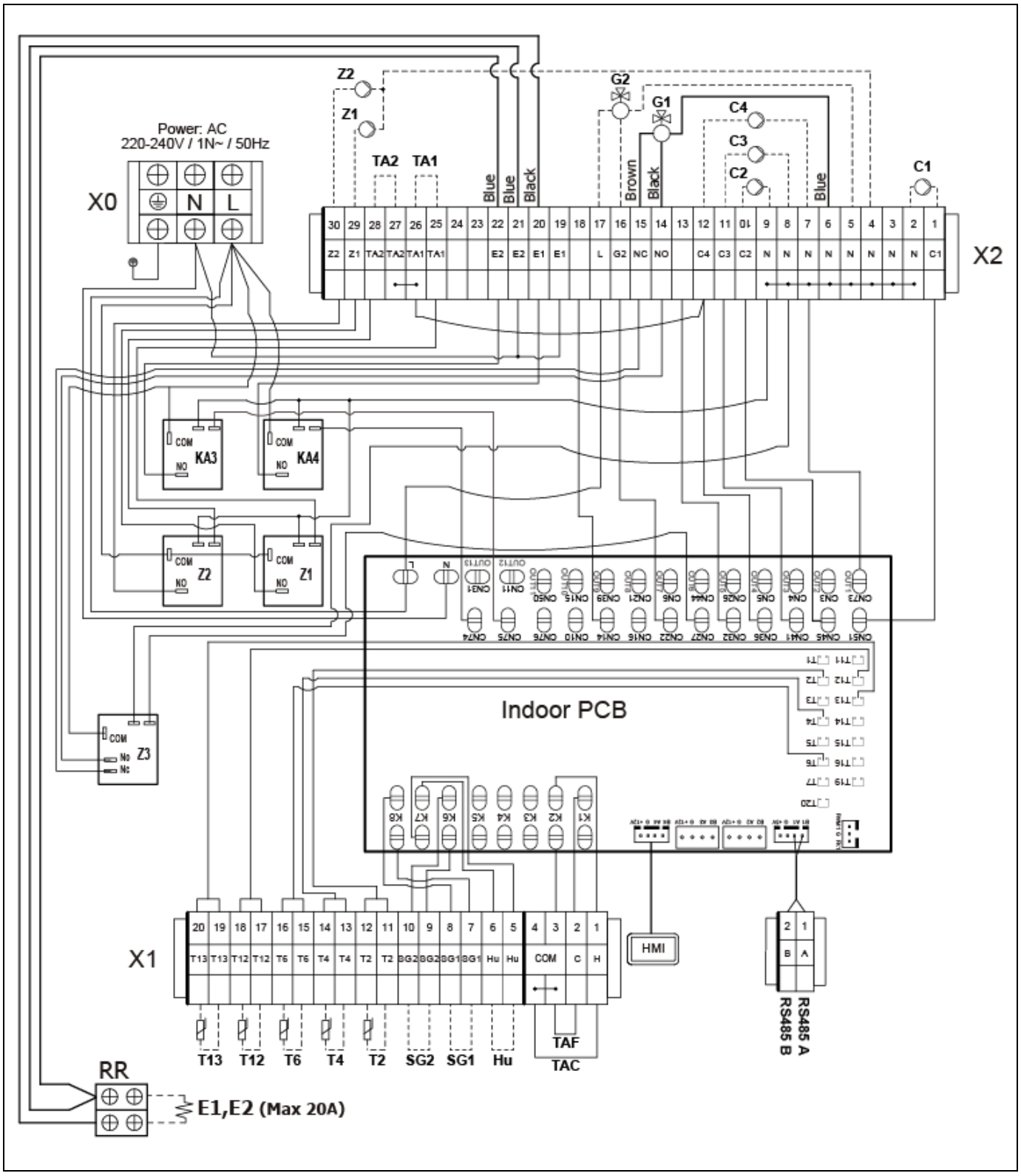

AQUA-TRIO ME EC/SE EC

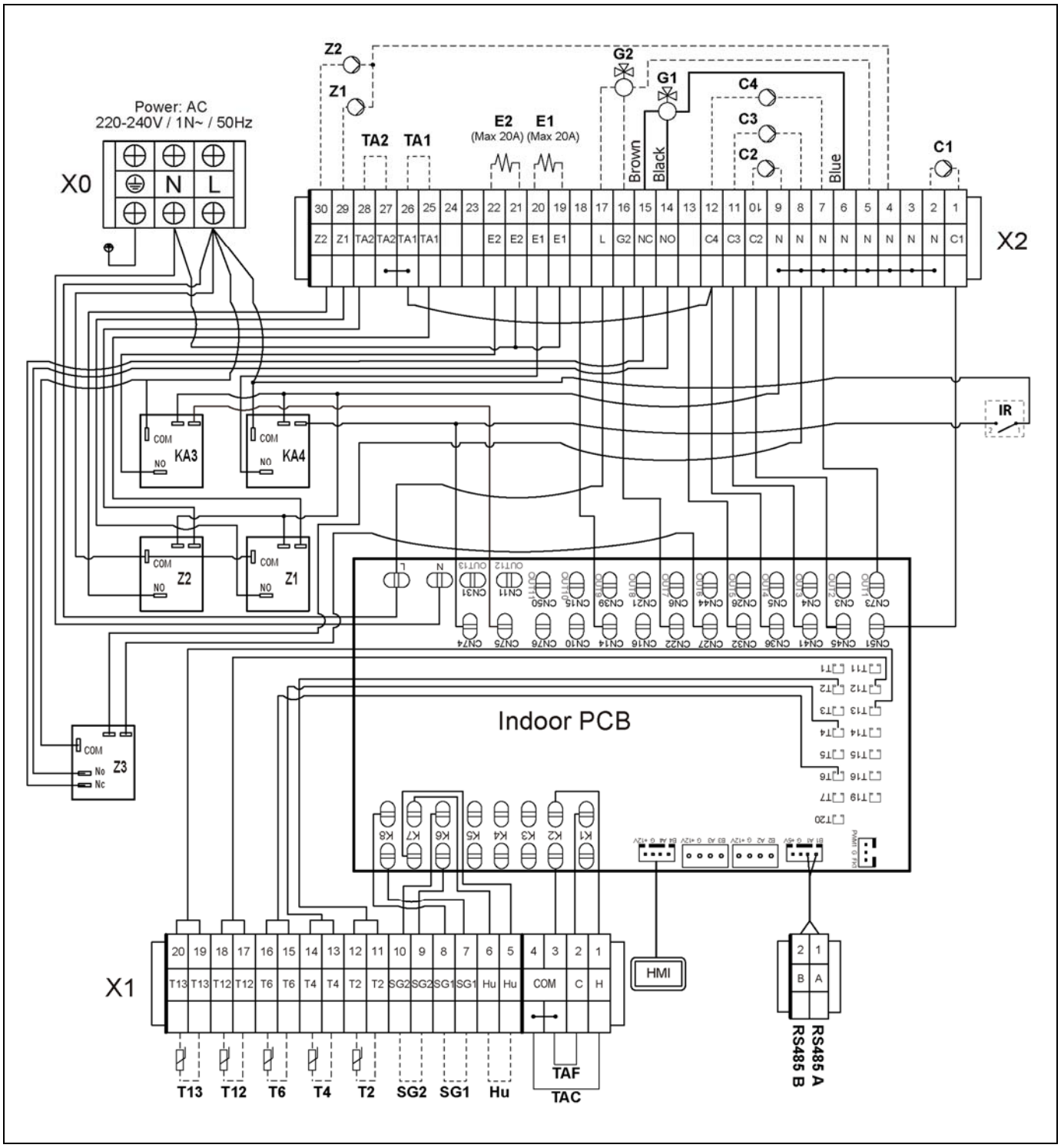

7 DIMENSIONS AND ASSEMBLY

ACQUA DUO SE 170 EC

Rear view

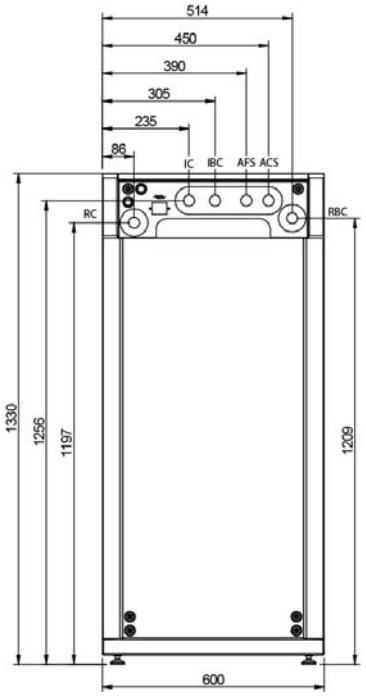

Top view

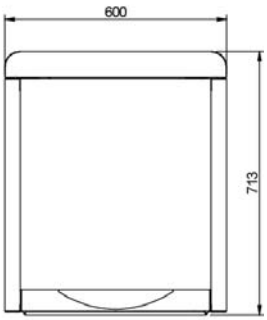

ACQUA TRIO SE 170 EC

Rear view

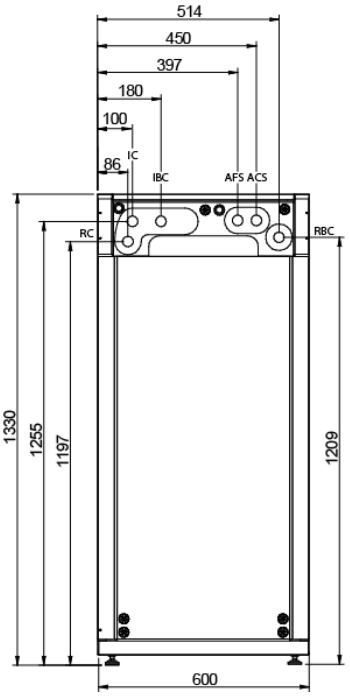

Top view

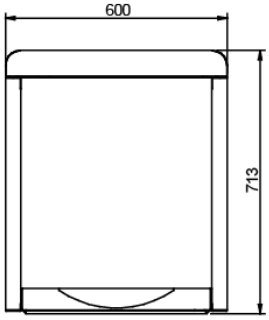

ACQUA DUO ME 110 EC

Front view

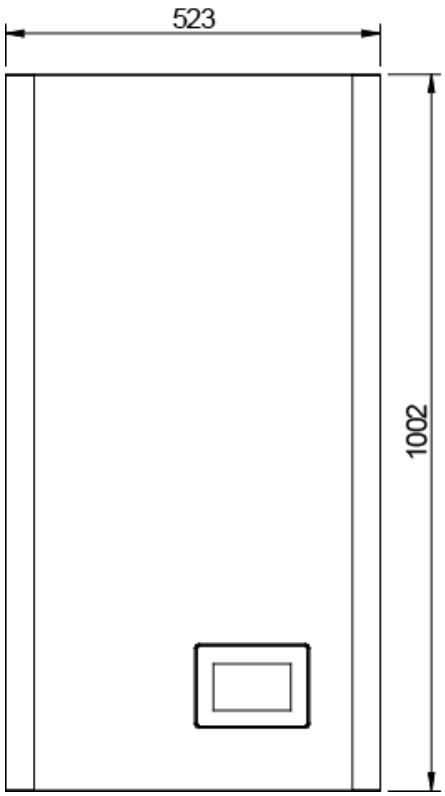

Bottom view

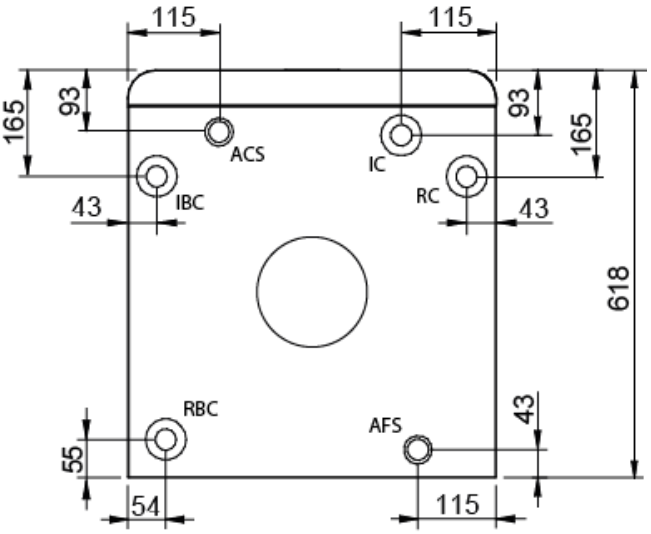

ACQUA TRIO ME 110 EC

Front view

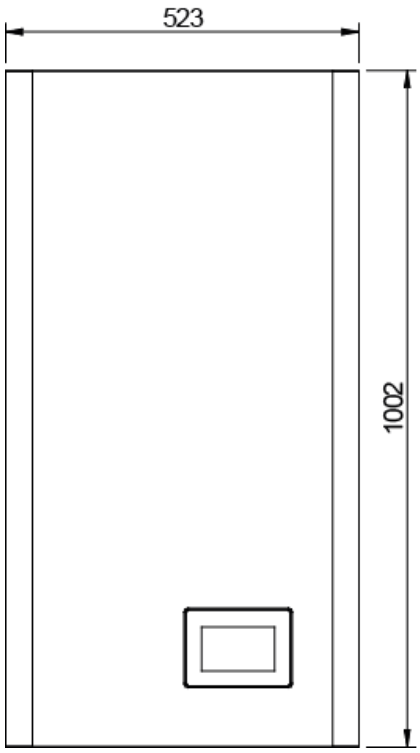

Bottom view

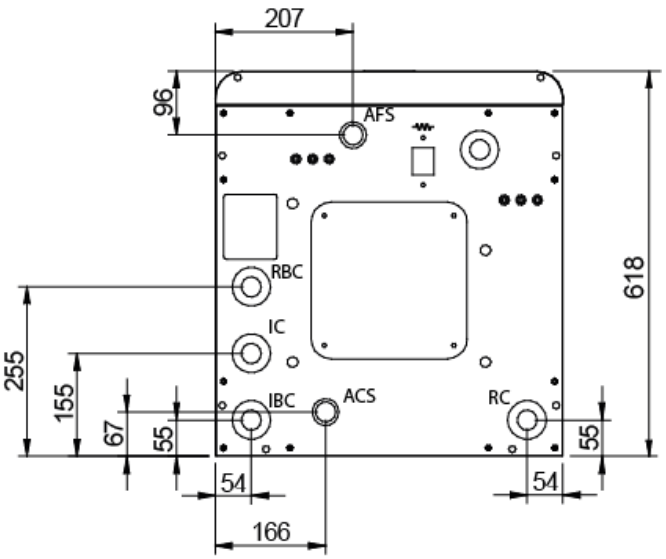

DHW: DHW outlet (3/4" M fitting).

DCW: Domestic cold water intake (3/4" M fitting).

RBC: Primary circuit return from the "tank in tank" to the heat pump (1" M fitting).

RC: Heating/Cooling circuit return (1" M fitting).

IBC: Primary circuit intake to the "tank in tank" (1" M fitting).

IC: Heating/Cooling outlet (1" M fitting).

ACQUA-TRIO ME 110 EC

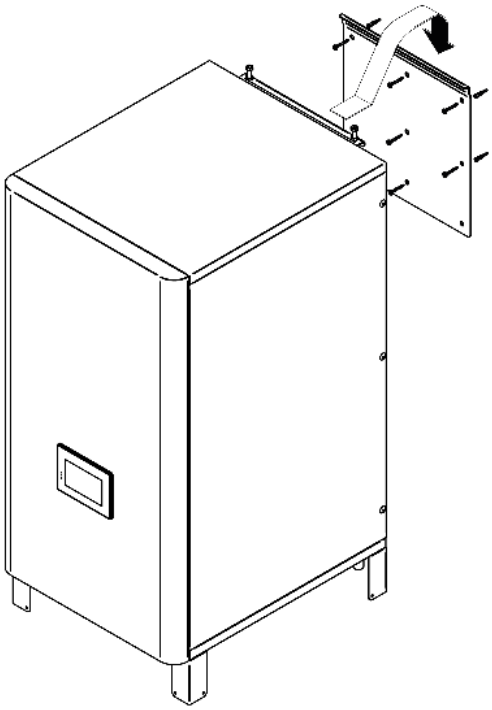

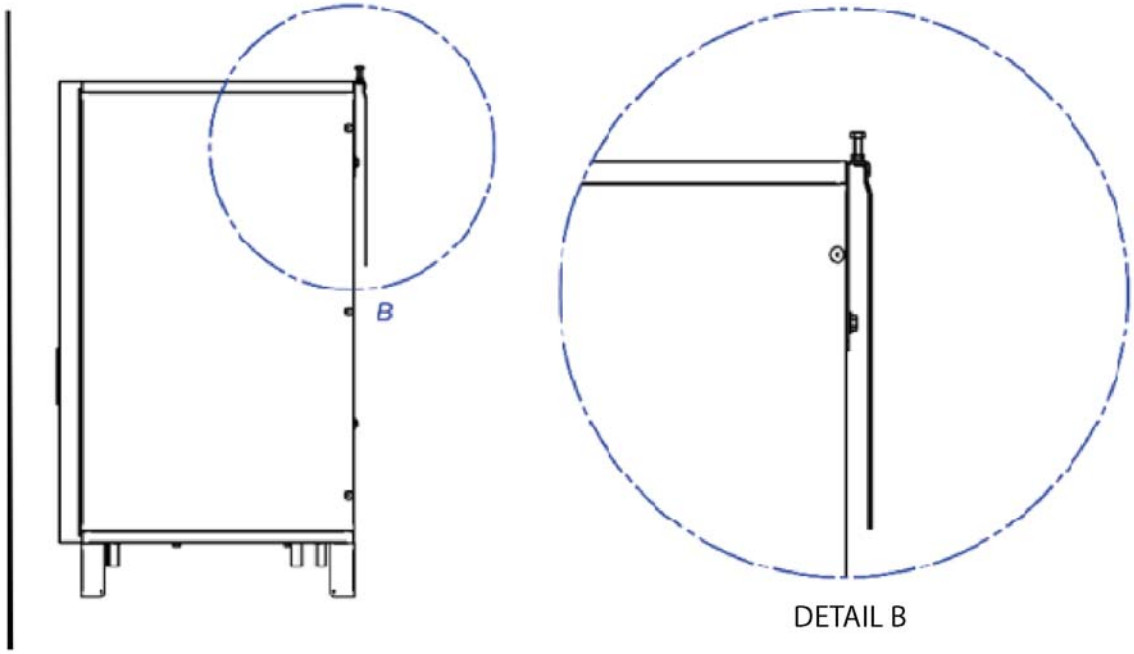

Minimum clearance from the floor 700 mm

8 TECHNICAL CHARACTERISTICS

Model	DHW volume	Primary circuit Buffer volume
ACQUA-TRIO ME 110 EC	DHW 85 L	20 L
ACQUA-DUO ME 110 EC	DHW 85 L	20 L
ACQUA-TRIO SE 170 EC	DHW 120 L	30 L
ACQUA-DUO SE 170 EC	DHW 120 L	30 L

DOMUSA TEKNIK

POSTAL ADDRESS
Apartado 95
20730 AZPEITIA
Tel.: (+34) 943 813 899

FACTORY AND OFFICES
Bº San Esteban s/n
20737 ERREZIL (Gipuzkoa)
Fax: (+34) 943 815 666

CDOC004020 09/12/24

www.domusateknik.com

DOMUSA TEKNIK reserves the right to make changes to the characteristics of its products without prior notice.