DOMUSA TEKNIK

ACQUA TRIO 170 OD

HYDRAULIC MODULE

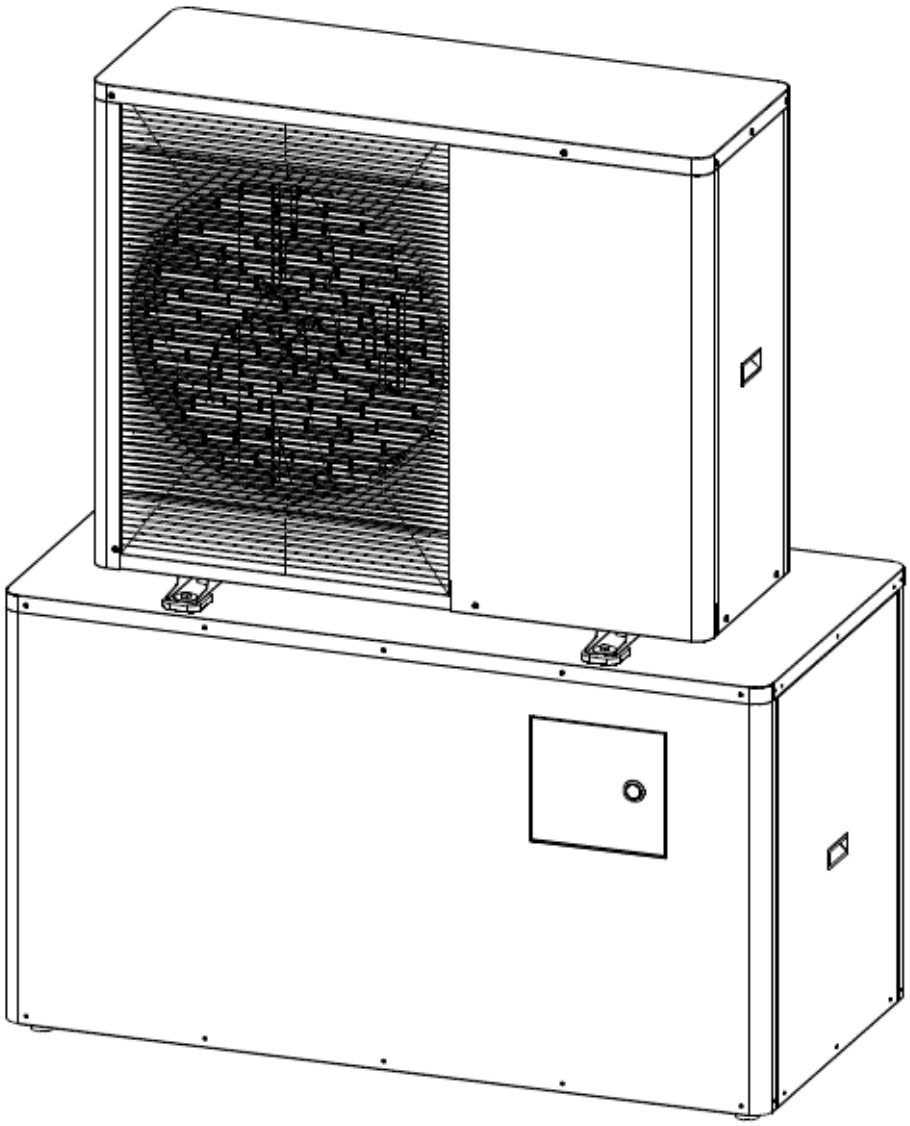

Applus ISO 9001 EC-8890/17 Systems Certification

Applus ISO 14001 MA-3661/17 Systems Certification

EN | INSTALLATION AND OPERATING INSTRUCTIONS

We would like to thank you for choosing a **DOMUSA TEKNIK** heat pump accessory. You have chosen the **ACQUA TRIO OD** model from the **DOMUSA TEKNIK** product range. This is an "all-in-one" hydraulic accumulation module. When it is installed alongside a heat pump from the **DUAL CLIMA HT** product range and with the proper hydraulic installation, it can provide the level of comfort you need in your home.

This document is an integral and essential part of the product and must be given to the user. Please read the warnings and advice contained in this manual carefully as they provide important information for safe installation, operation and maintenance.

This equipment must only be installed by qualified personnel in accordance with current standards and following the manufacturer's instructions.

Both commissioning and all maintenance tasks on the equipment must be performed exclusively by **DOMUSA TEKNIK** Official Technical Assistance Services.

Incorrect installation of this equipment may cause damage to people, animals and property. The manufacturer accepts no liability for such damage.

CONTENTS

1 SAFETY WARNINGS 4
1.1 USE AND INSTALLATION WARNINGS 4
1.2 PERSONAL SAFETY WARNINGS 4
1.3 WARNINGS ABOUT ANTI-FREEZE PROTECTION 5
2 LIST OF COMPONENTS 6
3 INSTALLATION INSTRUCTIONS 7
3.1 ACCESSORIES SUPPLIED 7
3.2 LOCATION 8
3.3 FASTENING 9
3.4 CONDENSATION DRAINAGE 11
3.5 HYDRAULIC INSTALLATION 12
3.6 EXAMPLE OF INSTALLATION 13
3.7 ASSEMBLY OF THE DHW SENSOR. 14
3.8 ASSEMBLING AND CONNECTING THE CONTROL PANEL 15
3.9 ELECTRICAL CONNECTIONS 19
3.10 CONNECTING THE DHW DIVERTER VALVE (G1) 20
3.11 CONNECTING THE CIRCULATION PUMPS (BC, BF) 20
3.12 OPTIONAL INSTALLATION OF A CIRCULATION PUMP INSIDE THE HYDRAULIC MODULE CABINET 21
3.13 CONNECTING THE AMBIENT THERMOSTATS 23
3.14 CONNECTING THE DUAL CLIMA HT HEAT PUMP 24
3.15 CONNECTING A 3-WIRE HEAT/COLD THERMOSTAT 24
3.16 CONNECTING TWO AMBIENT THERMOSTATS 25
3.17 CONNECTING ONE AMBIENT THERMOSTAT 27
3.18 FILLING THE INSTALLATION 29
3.19 DRAINING THE PRIMARY CIRCUIT 29
3.20 PRECAUTIONS AGAINST FREEZING 29
4 RECYCLING AND DISPOSAL 30
5 OPERATION 31
5.1 MANAGING THE CIRCULATION PUMPS IN THE INSTALLATION 31
6 OPTIONAL ACCESSORIES 32
6.1 ASSEMBLY AND CONNECTION OF A BACKUP ELEMENT KIT FOR DHW (OPTIONAL) 32
6.2 CATHODIC PROTECTION (OPTIONAL) 33
6.3 ASSEMBLY AND CONNECTION OF THE BACKUP ELEMENT KIT FOR HEATING (OPTIONAL) 34
6.4 ELECTRICAL CONNECTIONS DIAGRAM OF THE HEATING BACKUP ELEMENT KIT BOX (E2) (OPTIONAL). 36
7 ELECTRICAL DIAGRAM 37
8 DIMENSIONS 38
9 TECHNICAL CHARACTERISTICS 39

1 SAFETY WARNINGS

1.1 Use and installation warnings

The **ACQUA TRIO 170 OD** hydraulic storage tank module must be installed by technicians authorised by the Ministry of Industry and in compliance with current applicable laws and regulations. Please follow these recommendations strictly, given the importance of the items they refer to.

Read this instruction manual carefully and keep it safe where it can easily be located. **DOMUSA TEKNIK** shall not be liable for any damage caused by not following these instructions.

The **ACQUA TRIO 170 OD** storage tank module can only be installed in combination with a heat pump from the **DOMUSA TEKNIK DUAL CLIMA HT** product range.

ACQUA TRIO modules can be used in both heating and cooling installations, as well as domestic hot water installations.

This appliance must only be used for its intended purpose. Any other use should be considered inappropriate and therefore dangerous. Under no circumstances shall the manufacturer be held liable for damage caused by improper, incorrect or unreasonable use.

After removing all packaging, check that the contents are intact. If in doubt, do not use the equipment and contact the supplier. The packaging must be kept out of the reach of children as it is potentially hazardous.

Inappropriate installation or placement of the equipment or accessories may cause electric shock, short-circuits, leaks, fires or other damage to the equipment. Use only optional accessories or equipment manufactured by **DOMUSA TEKNIK** and specifically designed to work with the products presented in this manual. Do not make any changes to, replace or disconnect any safety or control devices without previously consulting with the manufacturer or the **DOMUSA TEKNIK** Official Technical Assistance Service.

When it is decided not to use the equipment any more, all parts that could potentially be a hazard must be deactivated.

1.2 Personal safety warnings

Always wear proper personal protection equipment (safety gloves, safety goggles, etc.) when performing installation and/or maintenance tasks with this equipment.

Do not touch any switches with wet hands. Touching a switch with wet hands can trigger electrical discharges. Disconnect the electrical power supply completely before working on electric components.

Do not touch water pipes or internal parts while or immediately after the equipment is running. The internal pipes or parts may be very hot or very cold, depending on how the unit is being used.

Hands can suffer heat or cold burns if they touch internal pipes or parts at inappropriate times. To prevent injuries, wait until the internal pipes or parts return to their normal temperature; otherwise, use appropriate safety gloves to handle them.

1.3 Warnings about anti-freeze protection

The **ACQUA TRIO 170 OD** hydraulic storage tank module is installed outside the home with the **DUAL CLIMA HT** heat pump installed above it. It is therefore exposed to extreme weather conditions during freezing periods. Therefore, it is essential for these types of appliances to be protected from freezing. If the water inside the heat pump and the hydraulic module freezes, the appliances will stop working and crack, which involves significant repair expenses.

To prevent the water in the appliances from freezing, it is **mandatory** to use some sort of safety system. **DOMUSA TEKNIK** recommends using anti-freeze fluid in the primary water circuit of the **DUAL CLIMA HT** pump in the **ACQUA TRIO 170 OD** hydraulic module or an anti-freeze discharge valve system to drain the installation in low temperature conditions.

Anti-freeze discharge valves in the **ACQUA TRIO 170 OD** hydraulic module are **standard**, installed inside the module for protection. Read the "Anti-freeze protection" section of the **DUAL CLIMA HT** heat pump instruction manual carefully for more information about these systems. **The DOMUSA TEKNIK warranty does not cover damage caused by the absence of any of these anti-freeze safety systems.**

1.4 Water characteristics

The water must be in accordance with Directive EU 2020/2184 on the quality of water intended for human consumption. Special attention must be paid to the following parameters:

- Maximum chloride concentration: 250 mg / l.
- Maximum sulphate concentration: 250 mg / l.
- Maximum concentration of chlorides and sulphates: 300 mg / l.
- Maximum conductivity: 600 µS / cm.

When the chlorine concentration in the Domestic Water exceeds 250 mg/l, it is recommended that anti-corrosion protection should be applied to the inside of the inter-accumulator so as to avoid its premature deterioration. As an option **DOMUSA TEKNIK** supplies electronic cathodic protection that is suitable for the **ACQUA** range. To install it, read carefully the assembly instructions that are provided with the same.

2 LIST OF COMPONENTS

ACQUA TRIO 170 OD

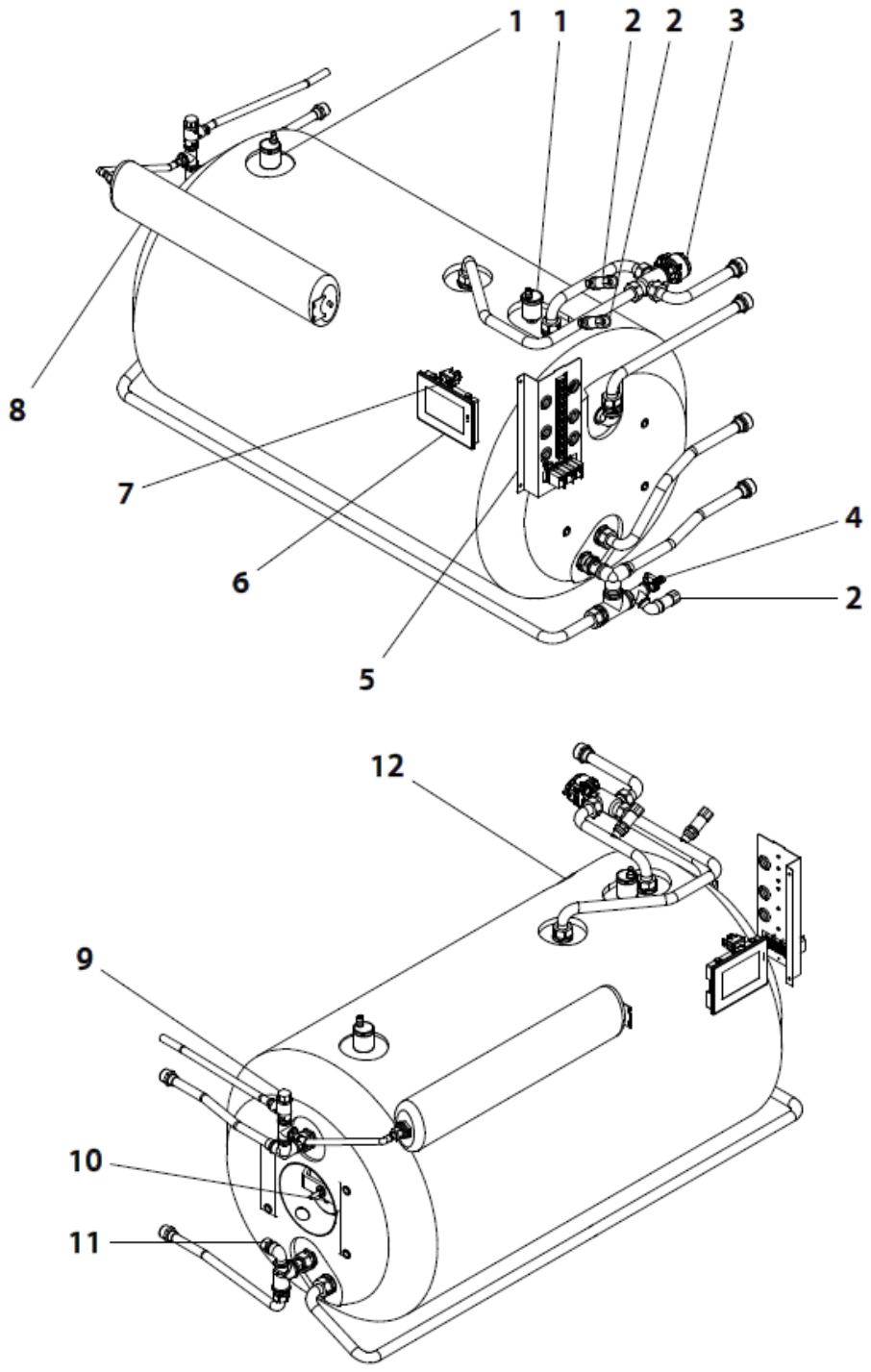

1. Air vent.
2. Anti-freeze valve.
3. Motorised 3-way diverter valve.
4. Primary circuit drain valve.
5. Connections strip.
6. Control panel.
7. Optional DHW heating element switch.
8. DHW expansion vessel.
9. DHW safety valve.
10. Sensor immersion sleeve for DHW.
11. DHW recirculation intake.
12. Optional heating element connection.

3 INSTALLATION INSTRUCTIONS

The **ACQUA TRIO 170 OD** hydraulic module must be installed in combination with a heat pump from the **DOMUSA TEKNIK DUAL CLIMA HT** product range. For this purpose, the hydraulic and electrical inputs/outputs of both equipment appliances must be interconnected. This sections presents a detailed description of the steps required for these interconnections.

To guarantee proper operation of the equipment, the installation must be carried out by a qualified professional in compliance with applicable official regulations.

3.1 Accessories supplied

The following accessories are supplied with the **ACQUA TRIO 170 OD** hydraulic module, in a bag, along with the documentation. Before installing the equipment, ensure that you have received these and they are in good condition.

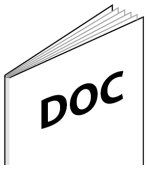

Documentation: The bag containing the documentation can be found inside the machine once the front is opened; this includes all the manuals and documents needed to install and operate the equipment.

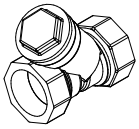

Filter: Water filter for the installation. To ensure proper installation, carefully read the section titled *"Hydraulic installation"*.

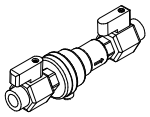

Filling disconnector: The primary circuit filling disconnector is supplied with the documents bag and should be installed in an accessible location.



Strap: Strap to hold the DHW sensor of the heat pump inside the sensor immersion sleeve of the storage tank. For proper installation, read the section titled *"Assembly of the DHW sensor"* carefully.

3.2 Location

The **ACQUA TRIO 170 OD** hydraulic module is designed for the **DUAL CLIMA HT** heat pump to be installed over it. When mounting the appliances, the necessary distances for installation must be heeded. These are indicated in the "*Location"* section of the instruction manual of the **DUAL CLIMA HT heat pump.** In addition, to facilitate inspection, internal cleaning and, if necessary, installation or replacement of a heating component, the **ACQUA TRIO 170 OD** modules should be provided with clearance from any fixed obstacles, as shown in the following figure:

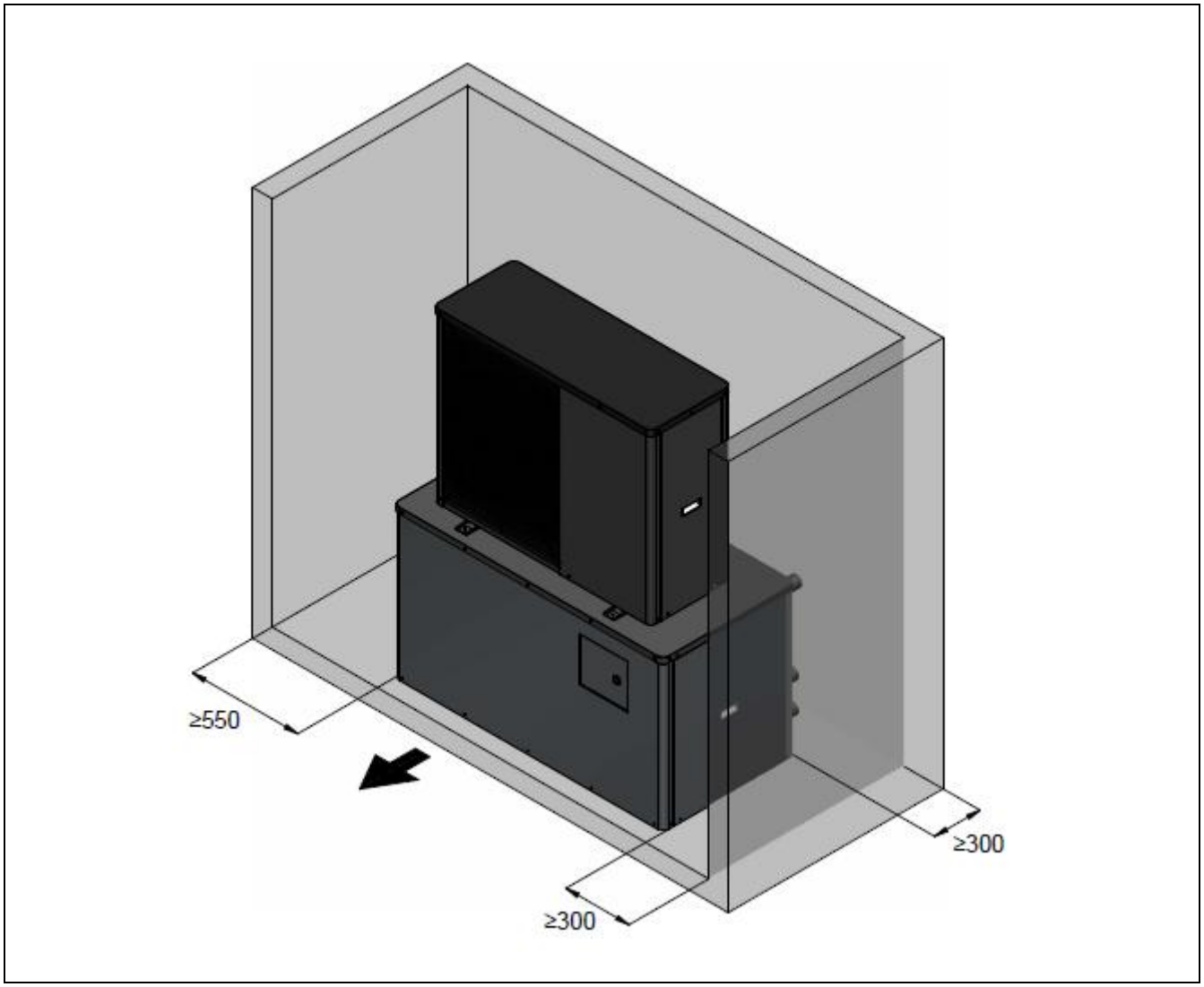

IMPORTANT: The instructions and distances indicated in the "*Location"* section of the instruction manual of the DUAL CLIMA HT heat pump must be heeded.

The appliance should be sufficiently within reach for subsequent installation and maintenance tasks. Make sure that there is enough room for the hydraulic and electrical connections to the inside of the home to be made without difficulty. The distances that appear in the figure above are the minimum needed to ensure proper appliance operation; however, sometimes more space may be needed for maintenance tasks.

3.3 Fastening

The **ACQUA TRIO 170 OD** hydraulic module must be placed firmly on a surface with the following characteristics:

- Guarantees a solid fixture (preferably concrete).
- Withstands its weight with ease.
- Has a permeable area underneath for condensation drainage (earth, gravel, sand, etc.).
- Does not transmit vibrations to the home. It is advisable to install the anti-vibration brackets supplied with the heat pump.

It is essential to **level** the heat pump and the hydraulic module to ensure their proper operation and that the condensation water does not exit at any point other then the drainage hole provided. If necessary, movement caused by strong wind can be prevented by installing stops on the lower legs of the hydraulic module.

The heat pump must be firmly fastened to the ceiling of the **ACQUA TRIO 170 OD** storage tank with the four screws (**2**) and washers (**1**) of the module ceiling. To fasten the heat pump to the module ceiling place the anti-vibration bracket (**3**) supplied with the heat pump between the module ceiling and the base of the heat pump, as shown in the figure.

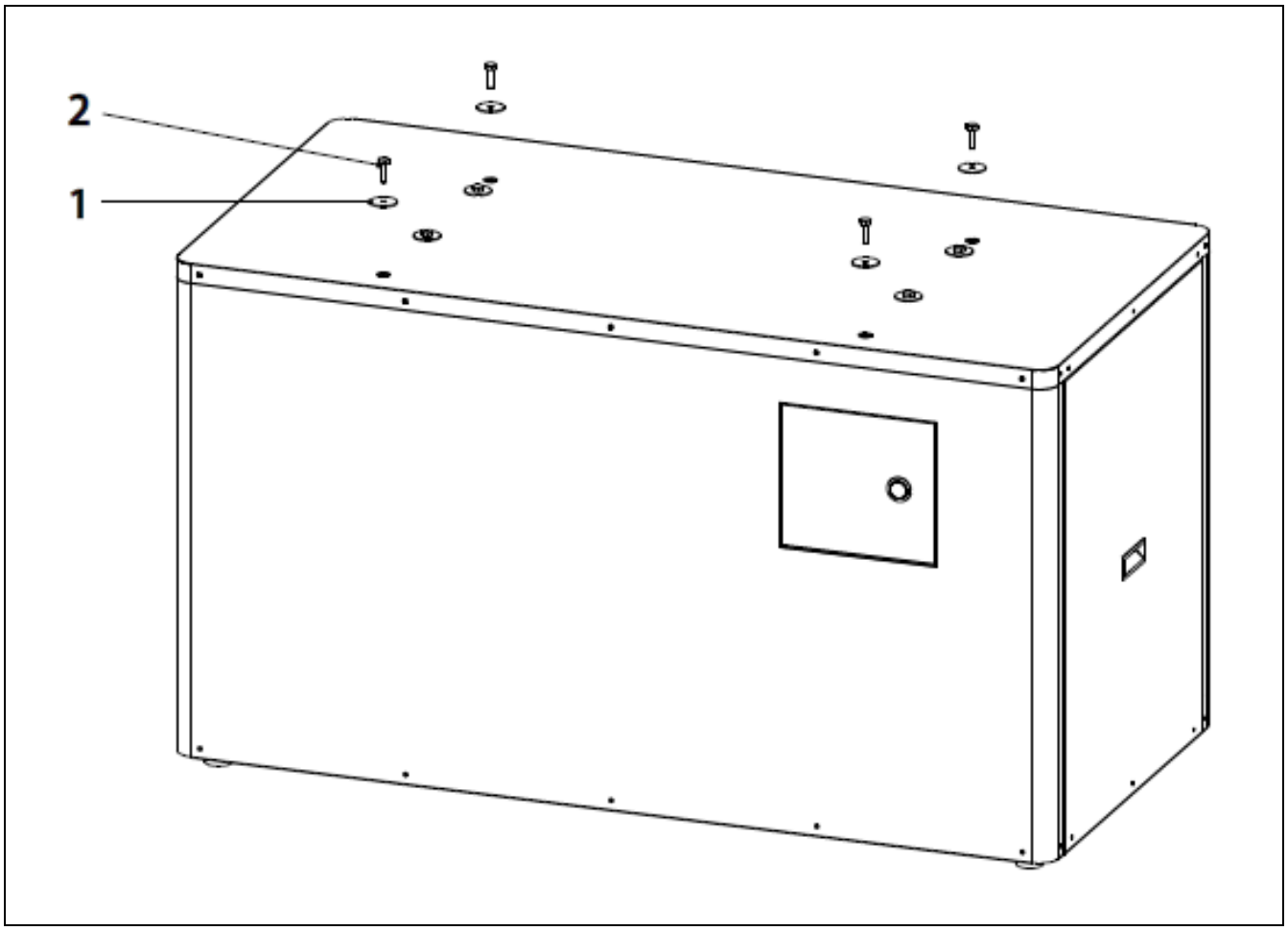

IMPORTANT: **To ensure proper operation of the heat pump and the hydraulic module, it is essential to level the heat pump to ensure that the condensation water does not exit at any point other then the drainage hole provided.**

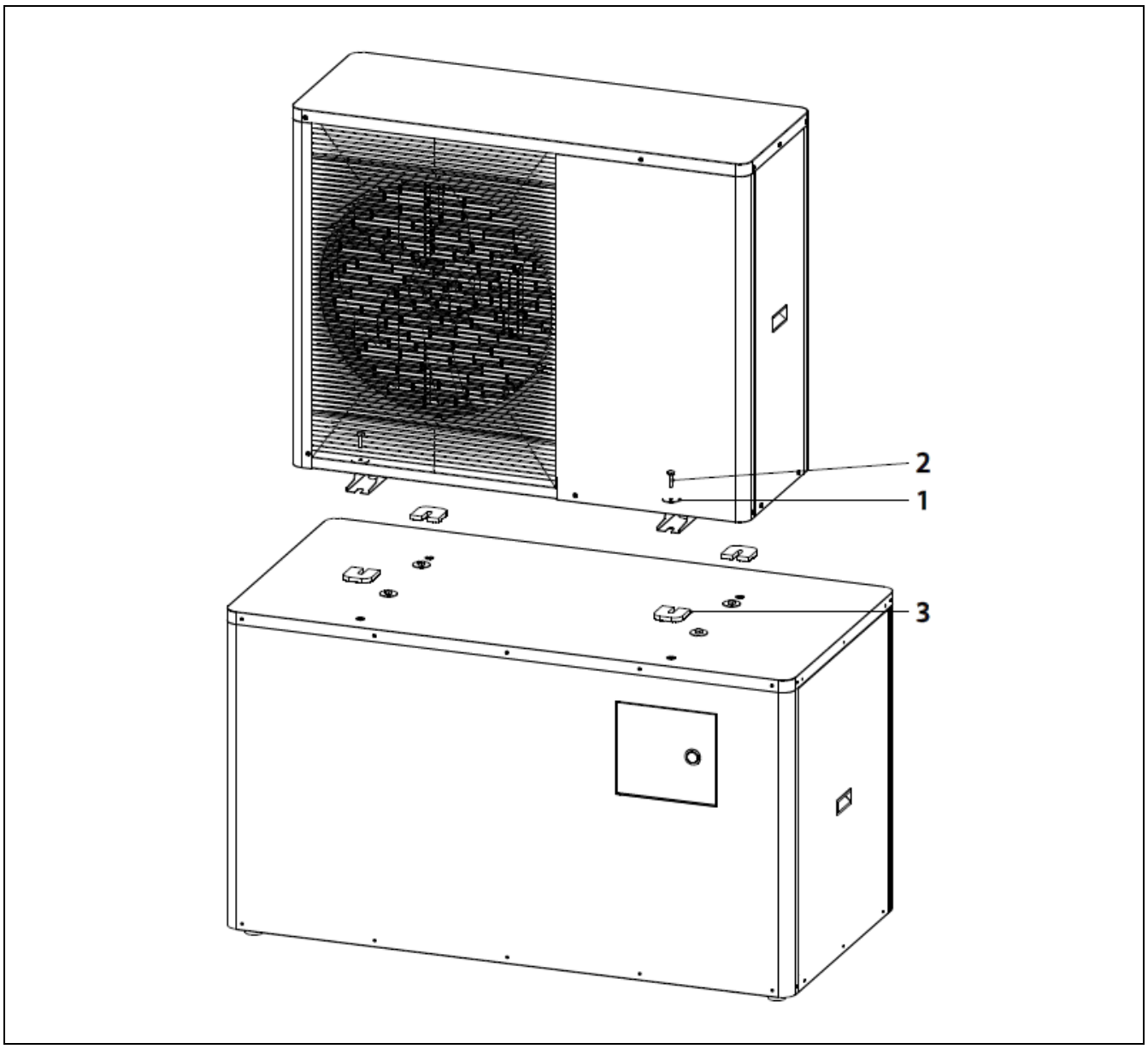
2
1
3

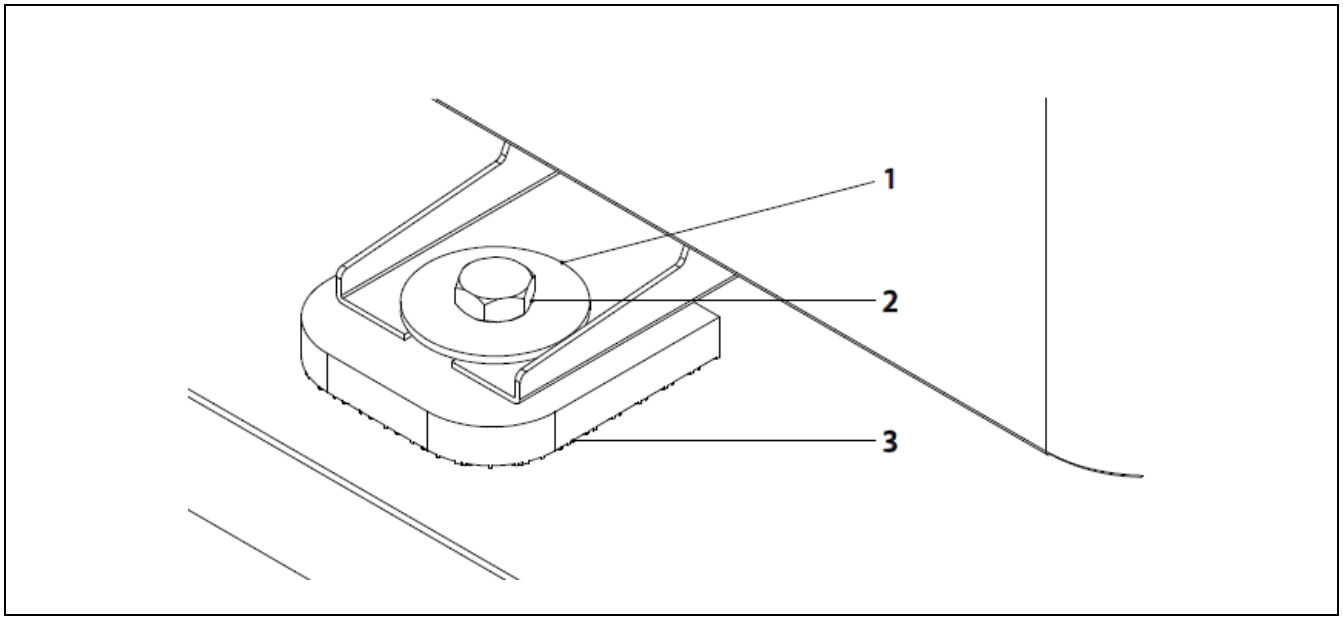
1
2
3

3.4 Condensation drainage

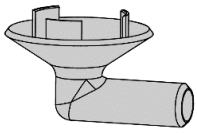

During normal operation, the heat pump can evacuate large amounts of water; for this purpose, the **DUAL CLIMA HT** heat pump has two holes at the bottom. Included along with the documentation, the heat pump has an **elbow-shaped accessory** for condensation drainage. This is installed on the drain hole to drain off condensation through a hose to a place where the condensation can be evacuated. Make sure not to clog these openings during installation of the appliance.

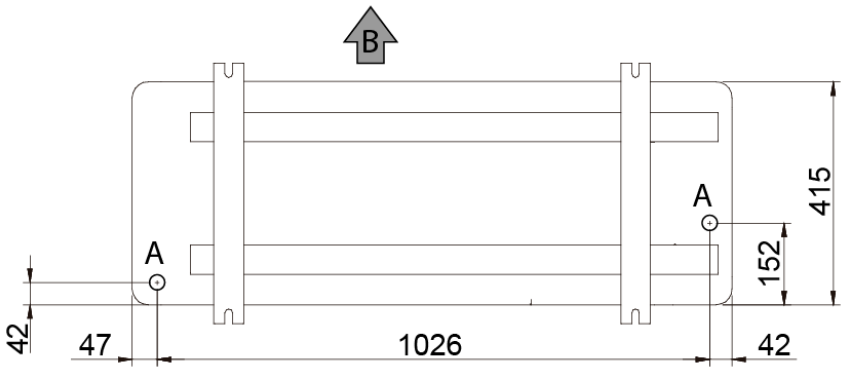

A: Condensation drainage hole (seen from the bottom of the appliance).
B: Indicates the front of the appliance (discharge side).

If it is installed in a balcony, water condensation should run into a drain to avoid any inconvenience or damage caused by dripping water. If the appliance is installed in a region where the temperature reaches below 0º for a long period of time, make sure that the ice that may form does not pose a hazard.

IMPORTANT: **To ensure that the heat pump works properly, the elbow provided for drainage must be installed and connected to a hose that leads to an appropriate place to drain the condensation.**

3.5 Hydraulic installation

The hydraulics must be installed by qualified personnel according to current installation regulations and taking into account the following recommendations:

- The hydraulic connections between the **ACQUA TRIO 170 OD** module and the **DUAL CLIMA HT** heat pump can be made by using 2 properly insulated pipes to connect the **IBC** and **RBC** connections of the module (see *"Sketch and Dimensions"*) with the flow and return connections of the heat pump, respectively.
- All water circuit pipes **MUST** be insulated to prevent condensation during cold mode operation and loss of cooling and heating capacity, as well as to prevent the outdoor pipes from freezing during the winter. The pipe insulation should have a minimum thickness of 35 mm (0.039 W/mK) and be closed cell insulation or vapour barrier insulation. In outdoor areas, the insulation should be protected from the deteriorating effects of the sun.
- A **water filter** should be installed in the heat pump water circuit to prevent clogging or narrowing caused by dirt in the installation. The filter **MUST BE** installed in the equipment's return line before filling the installation with water to prevent dirty water from entering the heat exchanger (condenser). **It is recommended to place this filter between two shut-off valves so cleaning can be performed without having to drain the installation completely**. The filter should be appropriate for the specific characteristics of each installation (water pipe types and materials, type of water used, volume of water in the installation and so on). In new installations, it is recommended to examine the water filter during the first few months after commissioning the equipment; nonetheless, it must be examined and cleaned if necessary at least once a year.
- Shut-off valves should be installed between the installation and the hydraulic module in order to simplify maintenance tasks.
- Air vents and other devices should be placed for proper removal of air from the circuit during the water filling stage.
- Proper operation of the **ACQUA TRIO 170 OD** hydraulic module requires that it be installed in combination with a **DUAL CLIMA HT** heat pump; therefore, please follow the instructions included in the heat pump installation manual, in addition to the recommendations listed above.
- The filling disconnector is needed to fill the primary circuit. Make the connections between the primary circuit and a domestic hot water point to the filling disconnector can be used to fill the circuit. Install it in a place that is easy to reach.
- The **DUAL CLIMA HT** heat pump is equipped with a standard 5-litre expansion vessel. If this capacity has to be increased due to the total volume of water in the installation, another expansion vessel will have to added.

3.6 Example of installation

ACQUA TRIO 170 OD

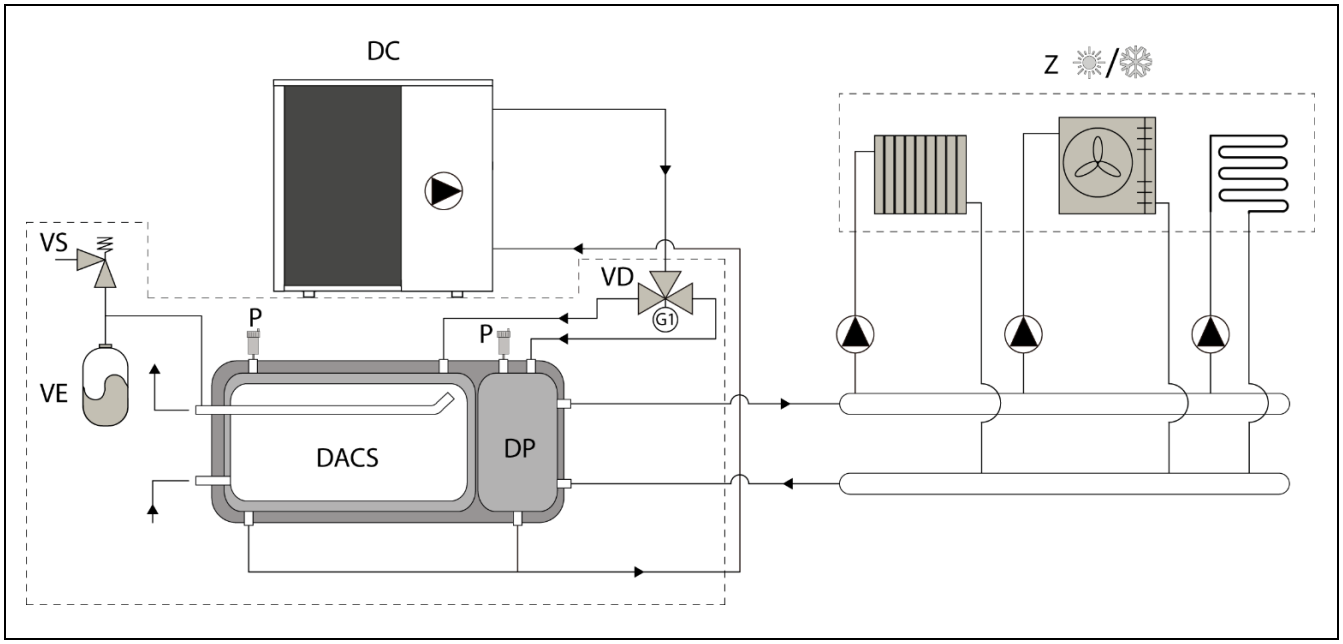

VD: DHW heating/cooling inverter valve.

Z: Heating/Cooling transmitter.

DACS: DHW storage tank.

DP: Primary circuit "buffer" storage tank.

DC: DUAL CLIMA HT heat pump.

VE: DHW expansion vessel.

VS: DHW safety valve.

P: Automatic air vent.

3.7 Assembly of the DHW sensor.

To ensure proper operation of the **ACQUA TRIO 170 OD** hydraulic module, insert the DHW sensor supplied with the **DUAL CLIMA HT** heat pump into the immersion sleeve provided in the module storage tank. The sensor is located inside the heat pump. For proper assembly, guide the sensor to the location of the **ACQUA TRIO 170 OD** module and follow the instructions below carefully to insert it in the sensor immersion sleeve provided for it:

1. Dismount the side panel that covers the module storage tank and the interior insulation.
2. Remove all the insulation from the elliptical cover and insert the sensor into the immersion sleeve provided on the cover of the storage tank. Make sure to insert the sensor until it comes into contact with the bottom of the immersion sleeve. Insert the band (supplied in the bag of accessories) into the opening in the immersion sleeve to secure the sensor cable.
3. Guide the tip of the DHW temperature sensor (**"DHW TANK SENSOR"** included inside the heat pump) through one of the feedthroughs provided at the rear. To connect the electrical cable of the sensor to the heat pump connections terminal strip, remove the heating element that is supplied and connected to terminal **T13 (19 and 20)** of the input connections strip of the **DUAL CLIMA HT** heat pump and replace it with the DWH sensor.
4. Place all the insulation again and mount the side panel that covers the storage tank.

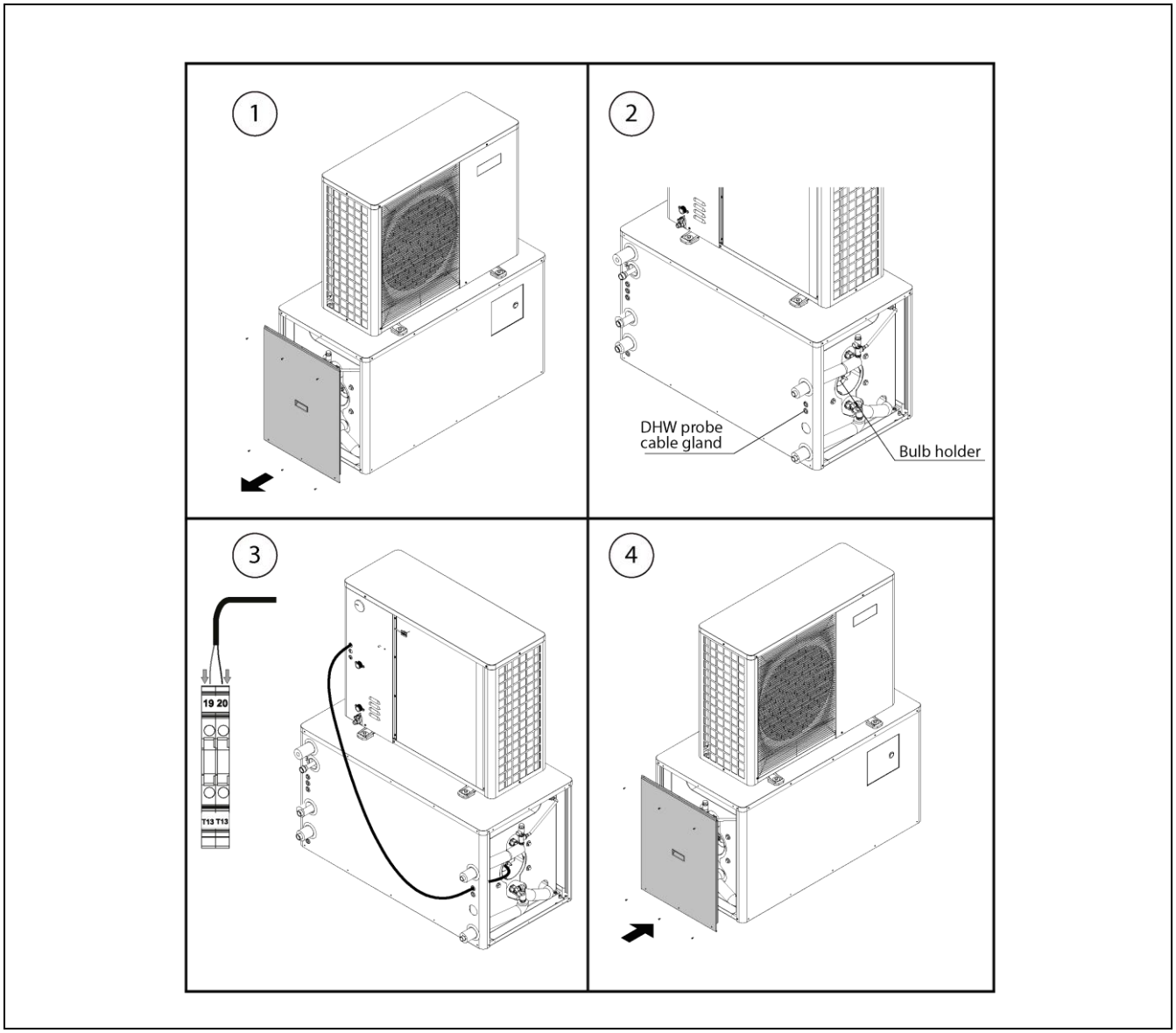

The sensor supplied with the heat pump is 5 metres long. If necessary, it can be extended to a maximum distance of 20 meters (section between 0.25 ÷ 1.25 mm2).

DANGER: Whenever any work is done on the electrical installation of the heat pump, make sure it is disconnected from the main electrical supply network.

3.8 Assembling and connecting the control panel

The control panel is supplied inside the heat pump and must be assembled on the **ACQUA TRIO 170 OD** hydraulic module. This is done by opening the door of the module and locating the control unit bracket at the front of the module. For proper assembly, follow the steps below carefully:

1. Open the door of the **ACQUA TRIO 170 OD** module control panel.

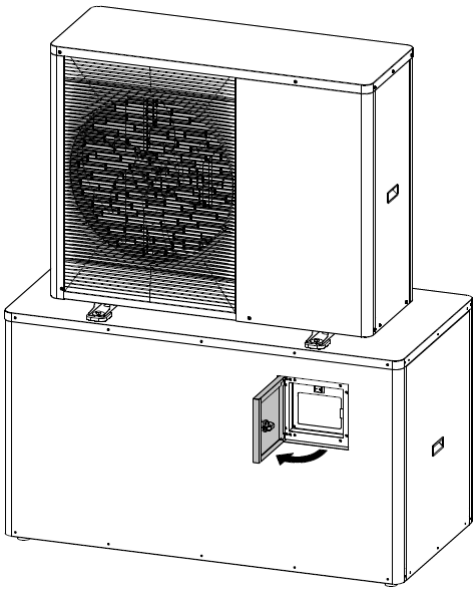

2. Release the four screws that secure the control panel bracket plate.

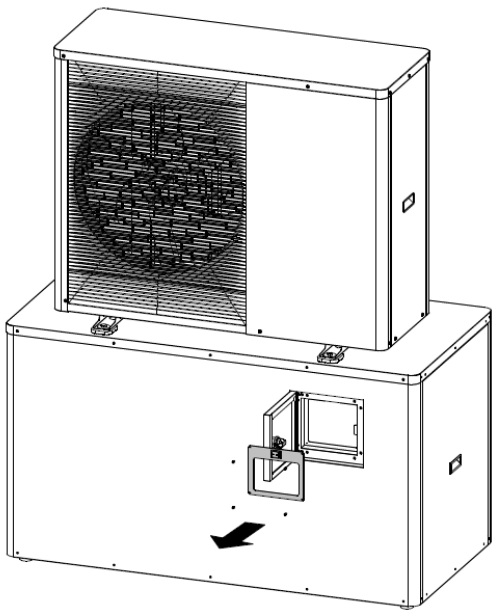

3. Insert the control panel of the **DUAL CLIMA HT** heat pump in the housing provided for it in the module plate.

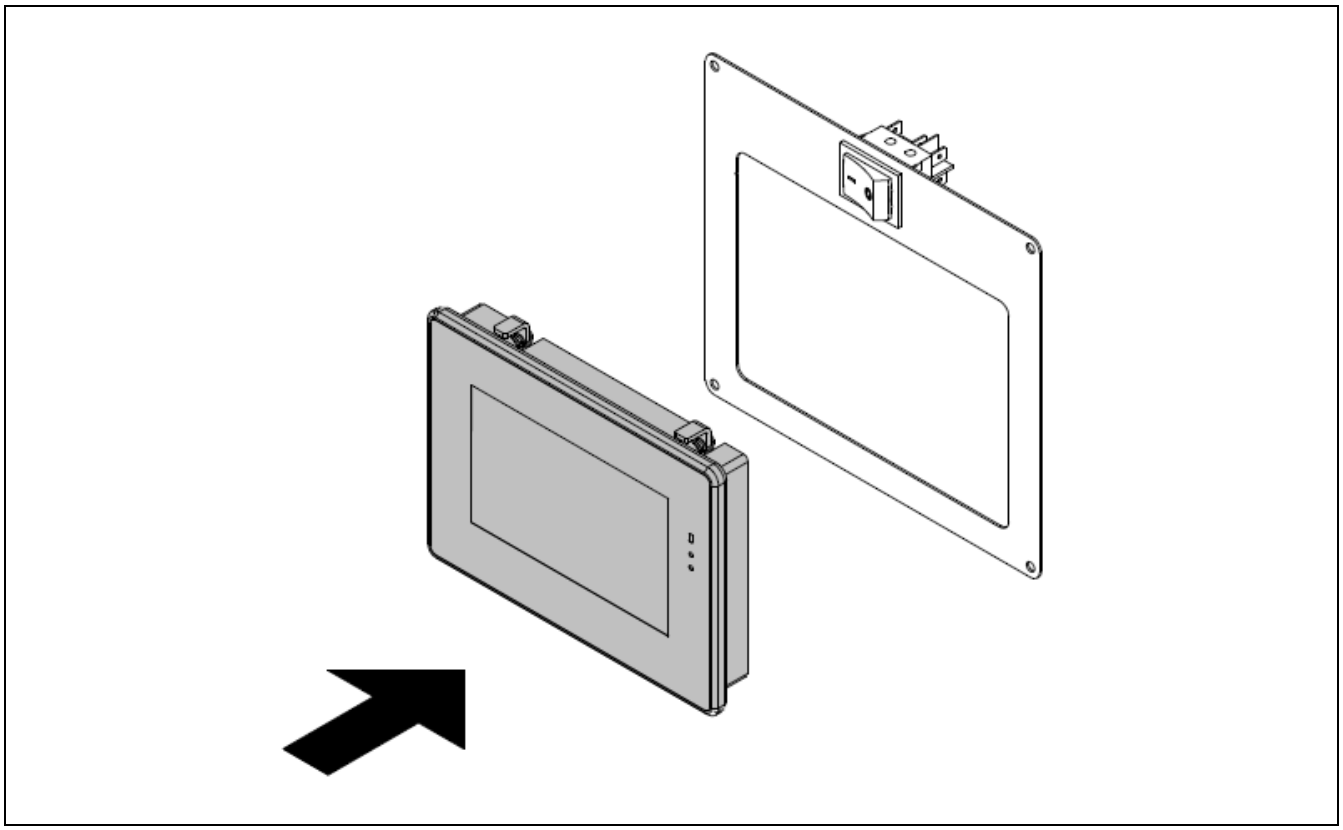

4. Turn the fastening brackets at the rear of the control panel and tighten the screws until it is firmly secured.

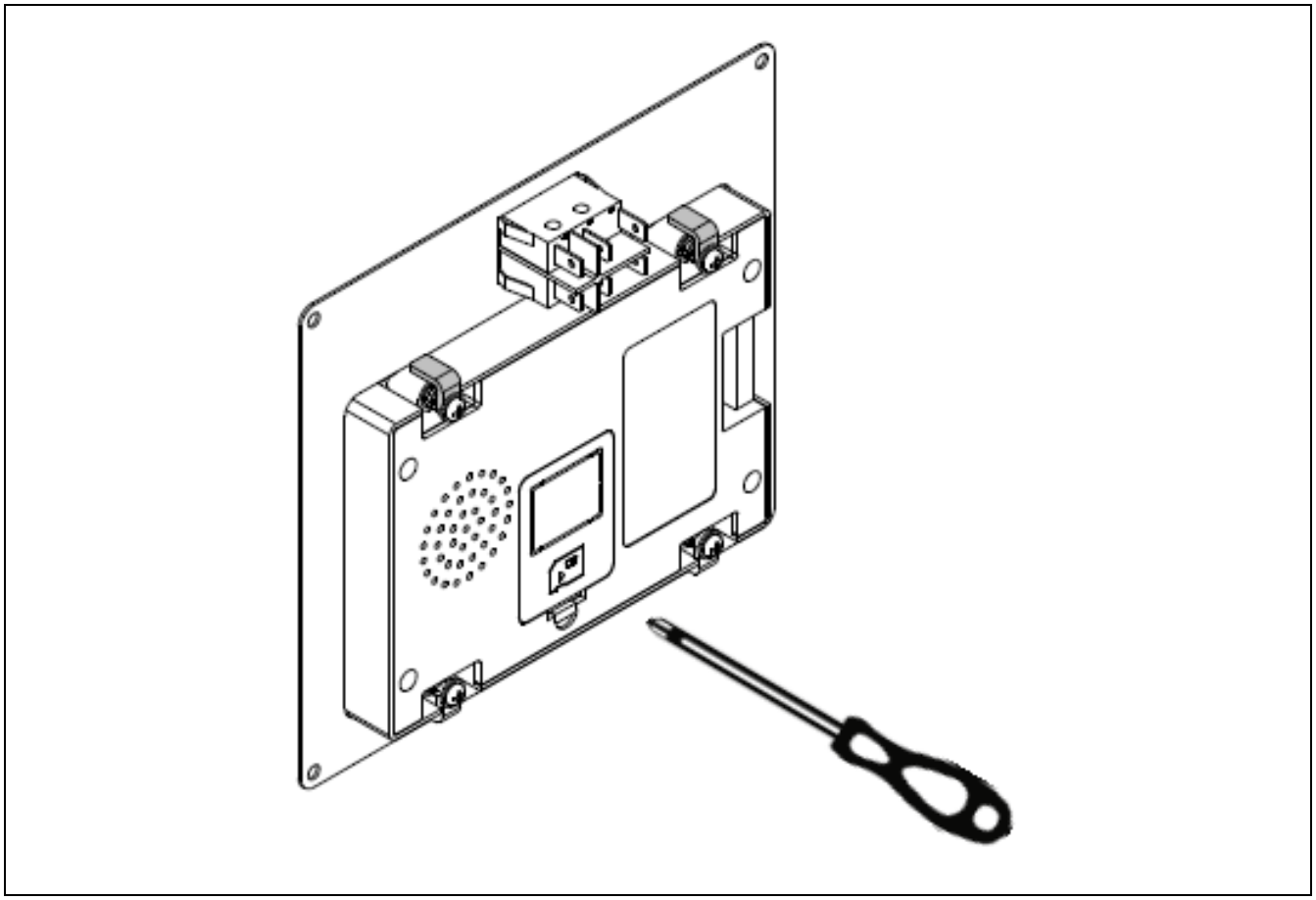

5. The cable for the control unit panel is supplied inside the heat pump and already connected to the input connections terminal strip. Pass this cable through the feedthrough provided for this purpose at the rear of the heat pump. Pass this cable again through the feedthrough at the rear of the **ACQUA TRIO 170 OD** module, until it reaches the control unit panel.

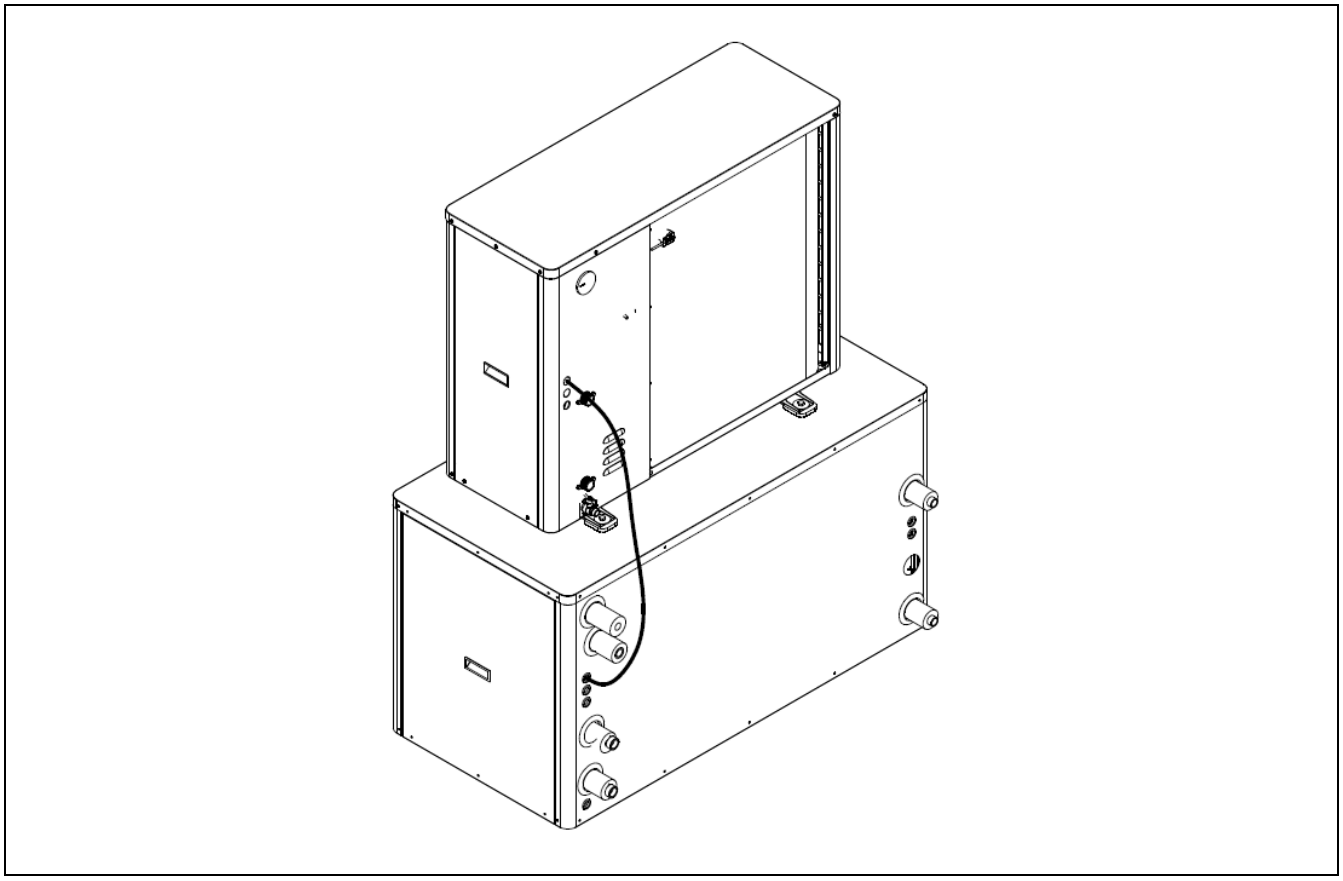

6. Insert the connector at the end of this cable into the connector at the rear of the control panel. **The length of cable inside the module should be enough** to ensure that internal maintenance tasks are carried out with ease.

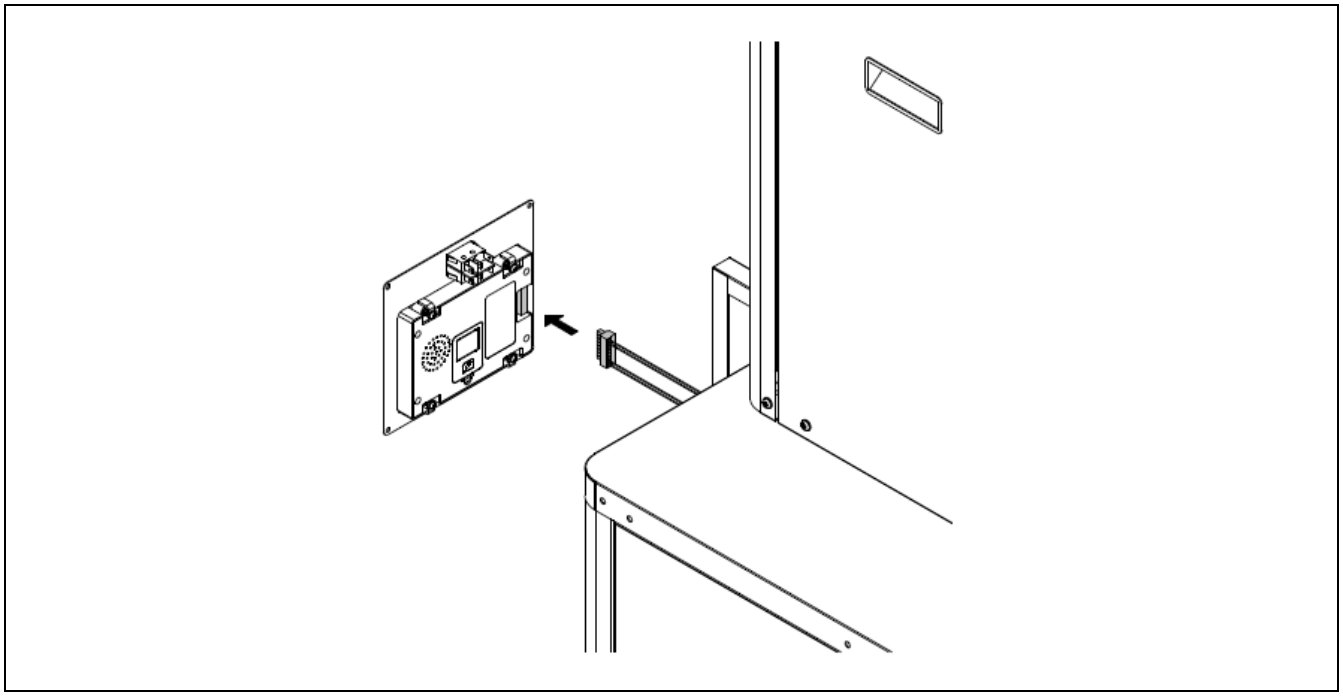

7. Place the control unit plate in place again and fasten it with the four screws.

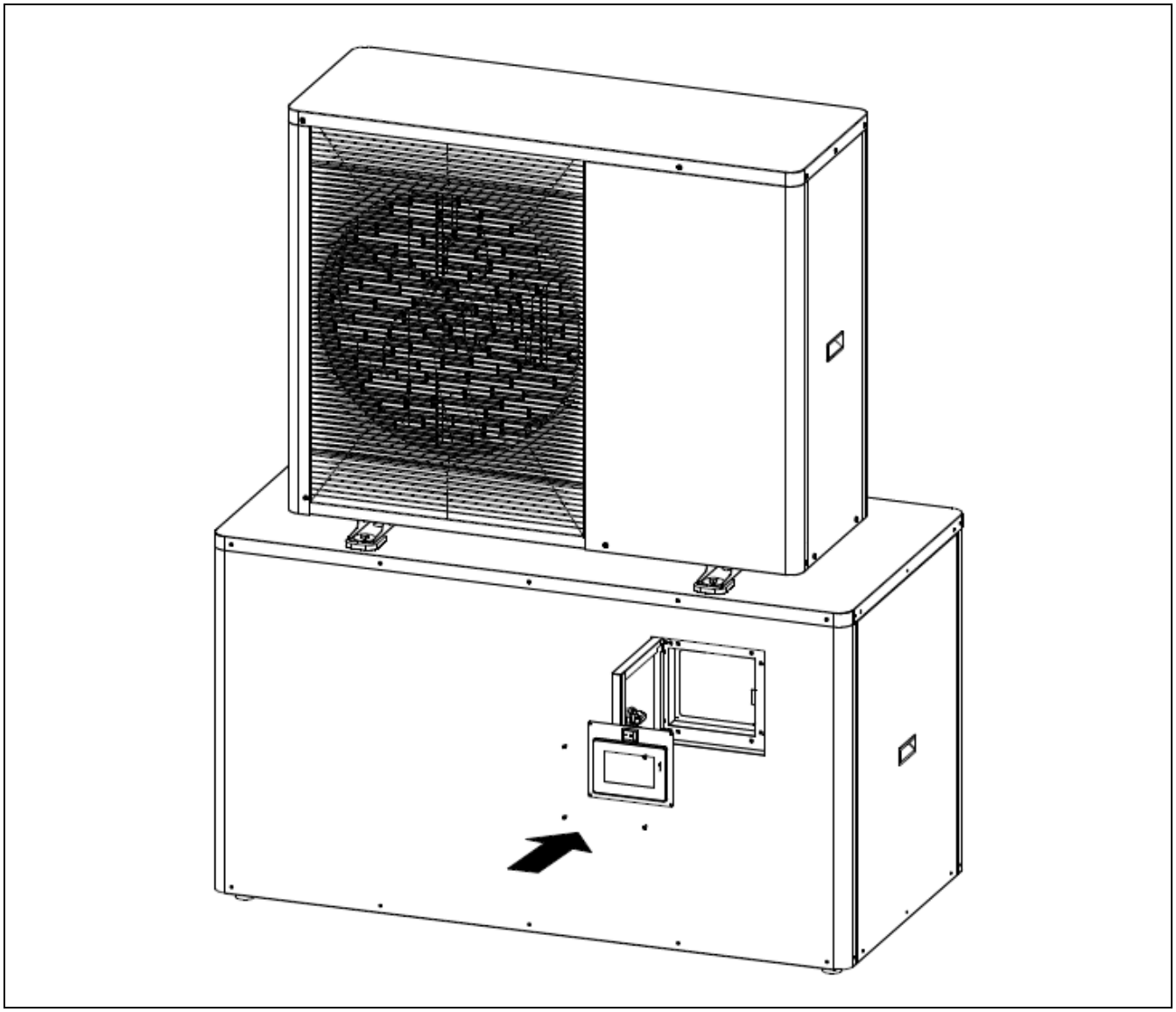

Before switching on the heat pump, make sure that the control panel is connected to the outdoor equipment. (See "Connecting the control panel" in the heat pump's instruction manual). The hydraulic module has several cable feedthroughs at the rear, one of which can be used to insert the cable into the equipment.

NOTE: The control panel can be installed inside the home or somewhere else; for this purpose, DOMUSA TEKNIK offers the optional "DUAL CLIMA HT wall display bracket" accessory.

The cable supplied with the heat pump is 5 metres long. If necessary, it can be extended to a maximum distance of 30 meters (section between 0.25 ÷ 1.25 mm^2).

DANGER: Whenever any work is done on the electrical installation of the heat pump, make sure it is disconnected from the main electrical supply network.

3.9 Electrical connections

To manage operation of the water circulation pumps of the Heating/Cooling installation water with thermostats or timed ambient thermostats installed in the home, the **ACQUA TRIO 170 OD** hydraulic module must be connected to the mains power supply from the connections terminal strip housed in its interior. All the electrical components of the installation (circulation pumps, thermostat and **DUAL CLIMA HT** heat pump) must also be connected to this terminal strip.

The electrical installation of the **ACQUA TRIO 170 OD** module must be performed by qualified personnel according to the corresponding current regulations. The electrical connections must be made in such a way that the module can be completely isolated and disconnected to perform all maintenance tasks in safe conditions.

The **ACQUA TRIO 170 OD** hydraulic module has several cable feedthroughs at the rear for the insertion of the wiring inside the equipment. The wiring exposed to outdoor weather conditions must be protected by cable ducts or sleeves or be appropriate for use outdoors (H07RN-F type cable or superior). It is also advisable to keep a minimum distance of 25 mm between 230 V power cables (general power supply, diverter valves, backup elements, circulation pumps, etc.) and 5 to 12 V power cables (control panel cable, temperature sensors, room sensors, etc.) and run them through separate pipes.

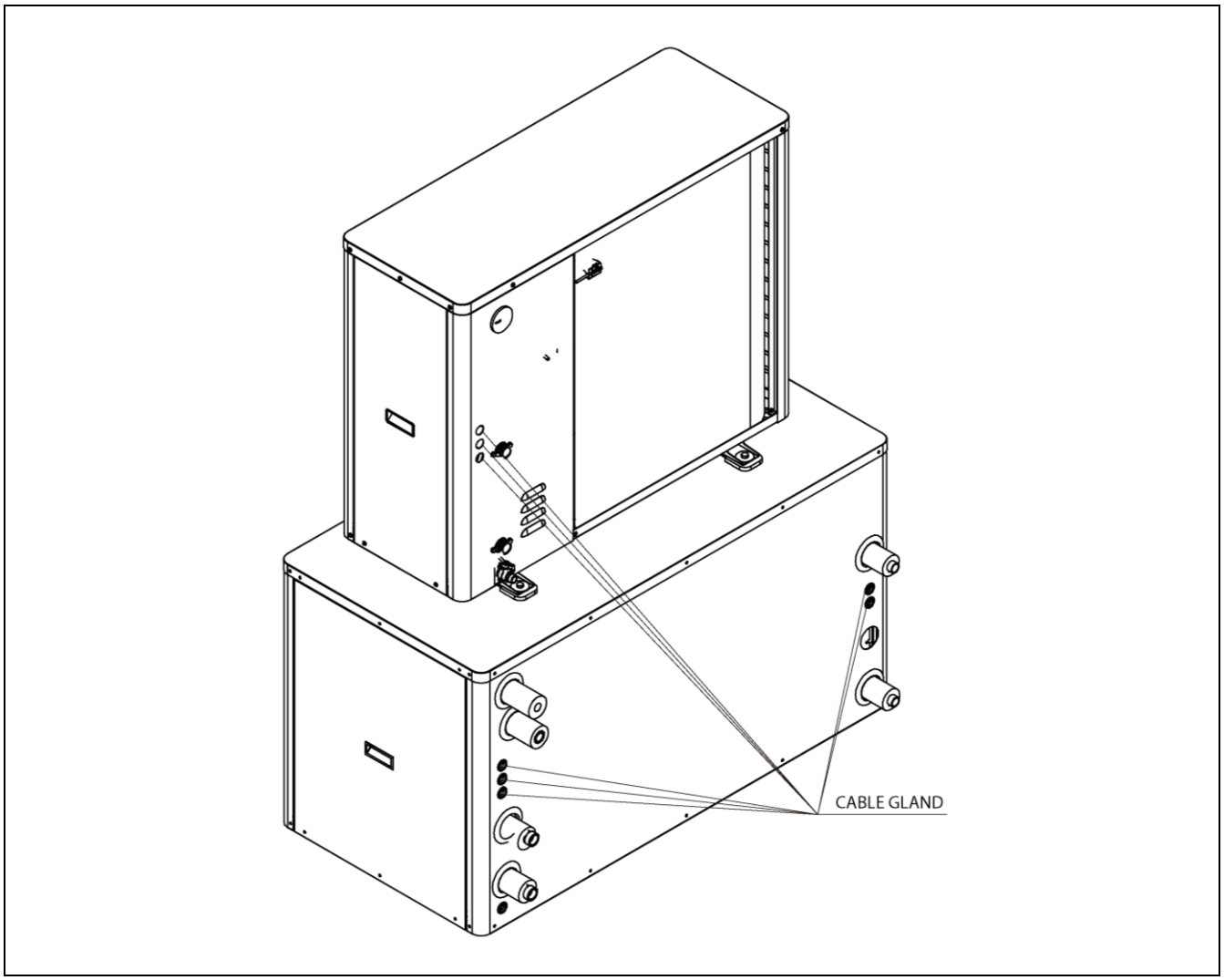

IMPORTANT: Whenever any work is done on the electrical installation of the module, make sure it is disconnected from the main electrical supply network.

3.10 Connecting the DHW diverter valve (G1)

The **ACQUA TRIO 170 OD** hydraulic module is equipped with a motorised 3-way diverter valve that directs the water flow from the heat pump to the DHW exchanger or to the Heating/Cooling installation, depending on the command signal it receives. This requires a 3-wire electrical cable to be passed from the connections strip of the **DUAL CLIMA HT** heat pump to the inside of the **ACQUA TRIO 170 OD** module. The hydraulic module has several cable feedthroughs, one of which can be used to insert the cable into the equipment.

The electrical cable of the diverter valve must be connected from the general connections strip of the heat pump to the connections strip of the **ACQUA TRIO 170 OD** module, after removing the cover to access it. Perform the connection as described in the images below:

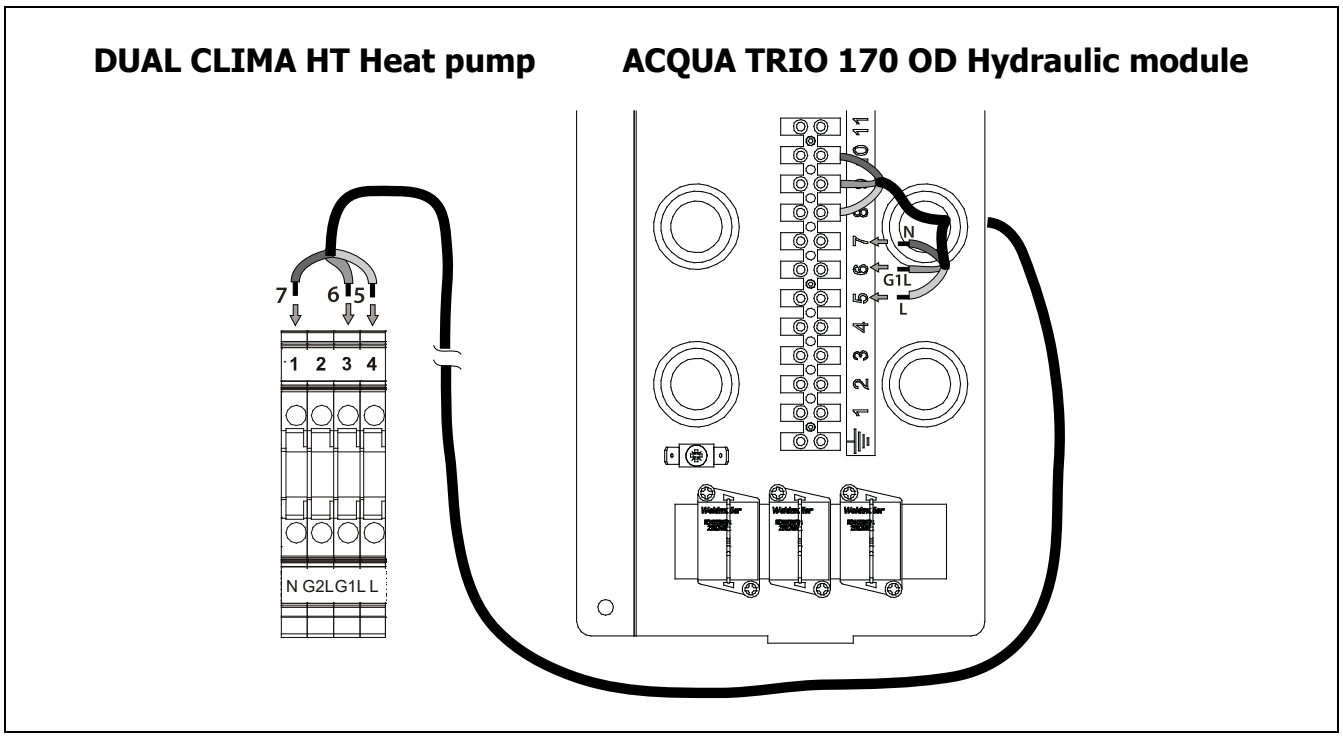

IMPORTANT: Whenever any work is done on the electrical installation of the heat pump, make sure it is disconnected from the main electrical supply network.

3.11 Connecting the circulation pumps (BC, BF)

The **ACQUA TRIO 170 OD** hydraulic module can manage the operation of up to 2 circulation pumps installed in the Heating and Cooling circuits of the Heating/Cooling installation, respectively. This requires connecting these pumps to the connections terminal strip located inside the module. The pumps will be activated and deactivated by the signals received from the thermostats connected to this terminal strip.

The circulation pump of the **BC** Heating circuit must be connected to terminals **18-19** of the module connections terminal strip and the circulation pump of the **BF** Cooling circuit must be connected to terminals **17-19** (see *"Electrical Diagram"*). If the same pump is installed for both Heating and Cooling hydraulic circuits, one of the pump wires must be connected to terminal **19** and the other to the 2 terminals **17** and **18**, while adding a bridge connecting them both. Don't forget to connect the **ground** cable of the pumps to the ground terminal in the strip. The hydraulic module has several cable feedthroughs for the insertion of pump wiring inside the equipment.

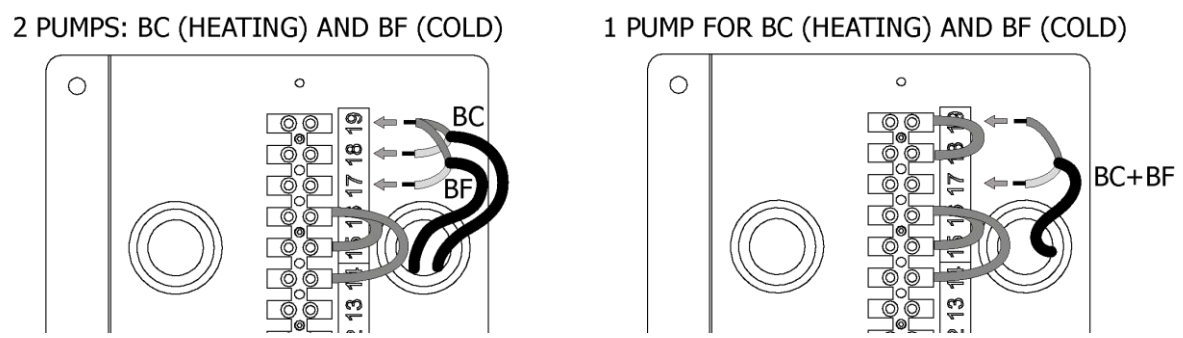

3.12 Optional installation of a circulation pump inside the hydraulic module cabinet

If a single pump is installed for both Heating and Cooling hydraulic circuits or the installation only provides heating, the **ACQUA TRIO 170 OD** hydraulic module allows an optional circulation pump to be installed inside the cabinet (**TKIT000011** pump Kit with insulation).

This circulation pump (**BC, BF**) is connected electrically as described in the point above. To assemble it, the first step is to dismount the heating/cooling flow pipe inside the **ACQUA TRIO 170 OD** module and replace it with the pipe and the pump from the optional kit offered by **DOMUSA TEKNIK**. Follow the steps below with care:

1. Dismount and remove the heating/cooling flow pipe, as shown in the figure.

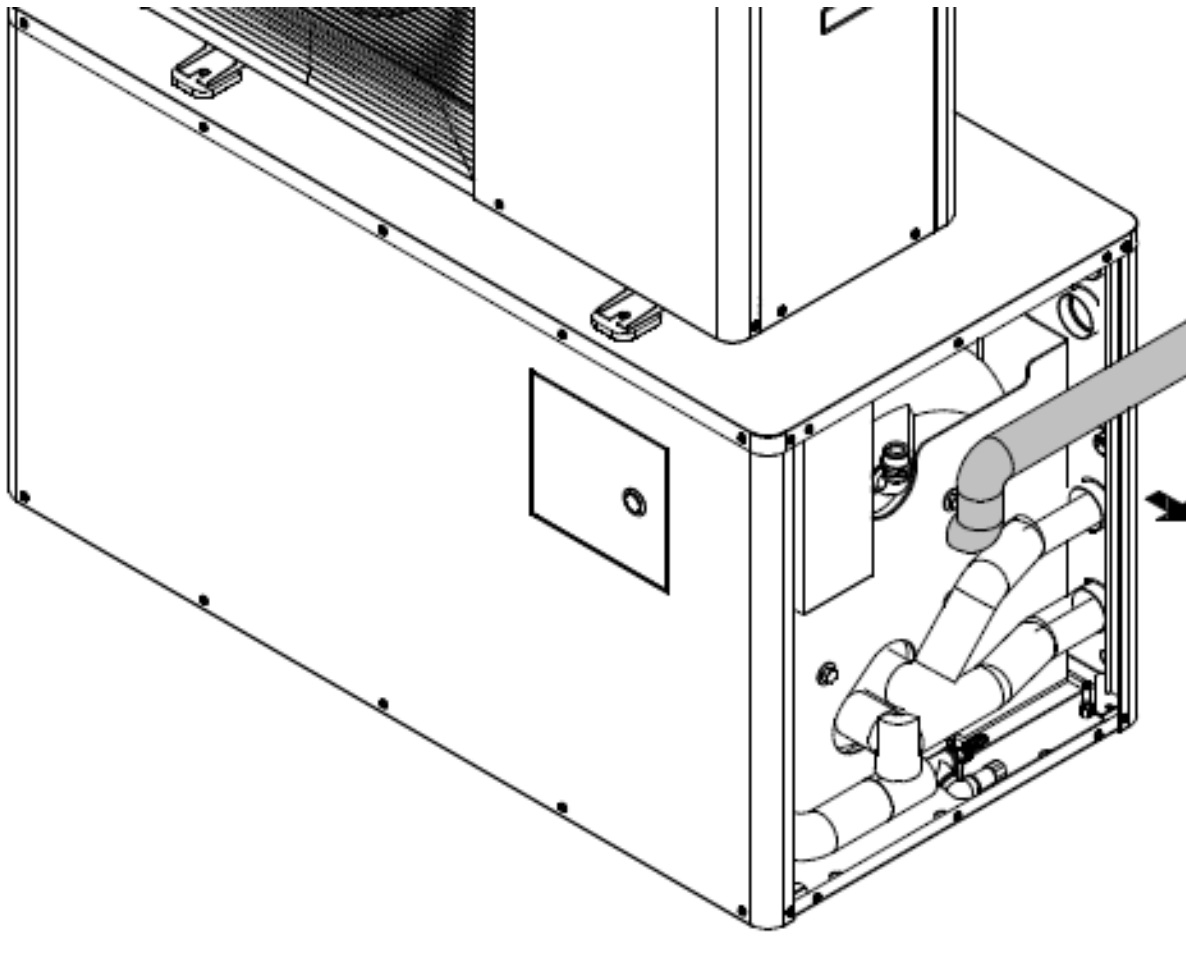

2. Assemble the pipe with the circulation pump from the kit in its position, making sure that the direction of the flow is correct, as shown in the figure, and ensuring that the connections are properly sealed. Connect the power cable supplied with the kit to the connections terminal strip as described in section "*Connecting the circulation pumps* (**BC, BF**)".

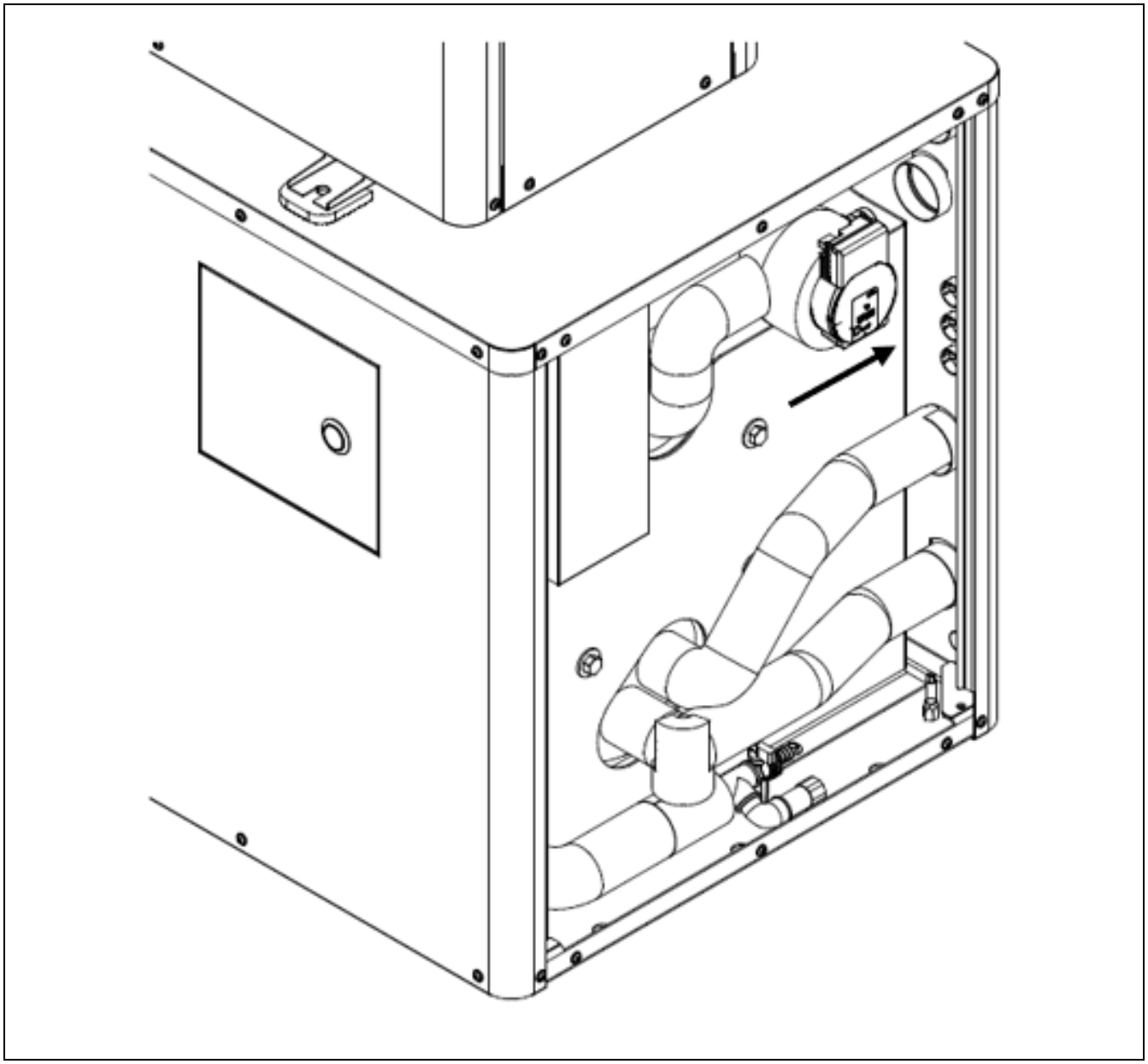

3.13 Connecting the ambient thermostats

The **ACQUA TRIO 170 OD** hydraulic module includes two connections on the connections strip that are prepared for the installation of up to 2 ambient chronothermostats or thermostats (see *"Electrical Diagram"*). This allows management of up to 2 water circulation pumps to activate or deactivate the heating (**BC**) and/or cooling (**BF**) service of the heating/cooling installation, switching them off when the desired temperature is reached in the home and switching them on when the temperature drops again. The **14-16** input will activate or deactivate the **BF** cooling pump and the **15-16** input will activate or deactivate the **BC** heating pump.

Terminals **14**, **15** and **16** are supplied from the factory with a bridge connecting them; therefore, regardless of the configuration of the thermostats to be installed, it will be necessary to remove **both** bridges before connecting one or more ambient thermostats.

Up to 3 types of different ambient thermostat configurations can be installed, depending on the type of thermostat used or their combination. The following sections describe the operation and installation of each of these configurations in detail.

In addition to terminals **11**, **12** and **13** of the connections strip, the signals of the thermostats can be connected to the **DUAL CLIMA HT** outdoor unit. This will allow remote and automatic management of the heat pump's operating modes from its location or that of the installed ambient thermostats. The Cooling mode will be activated and deactivated by the **12-13** terminals and the Heating mode will be activated or deactivated by the **13-11** input.

IMPORTANT: Whenever any work is done on the electrical installation of the hydraulic module, make sure it is disconnected from the main electrical supply network.

3.14 Connecting the DUAL CLIMA HT heat pump

To connect the **11**, **12** and **13** terminals of the hydraulic module with the heat pump, a 3-wire electrical cable must be passed from the connections strip of the **DUAL CLIMA HT** heat pump to the interior of the **ACQUA TRIO 170 OD** module. The hydraulic module has several cable feedthroughs at the rear, one of which can be used to insert the cable into the equipment.

The connection terminals of the heat pump thermostats are supplied from the factory with a bridge connecting them; therefore, **both** bridges must be removed to connect the cable from the hydraulic module. The figures below show the electrical connections between both appliances, depending on the version of the heat pump being used:

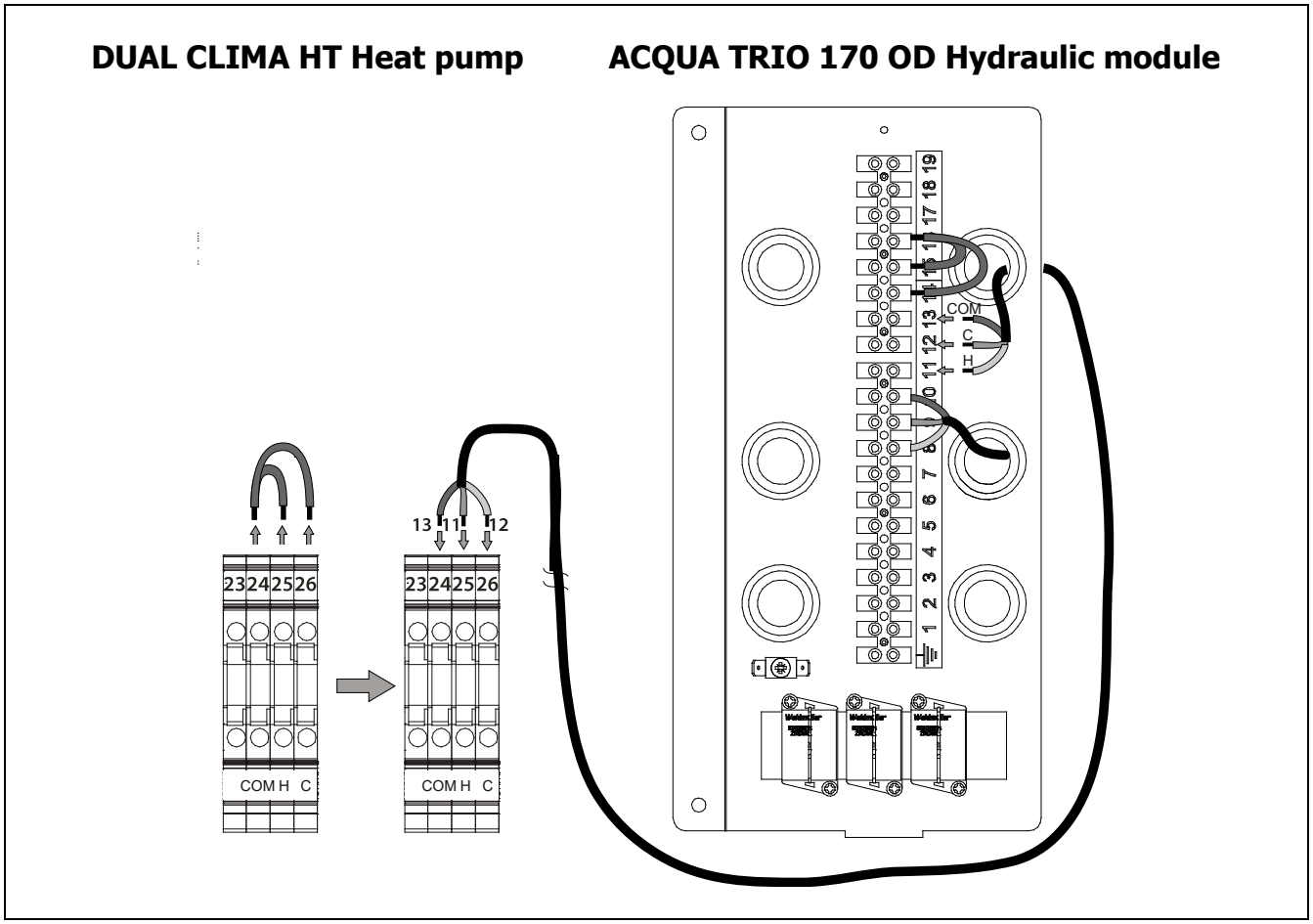

IMPORTANT: Whenever any work is done on the electrical installation of the heat pump, make sure it is disconnected from the main electrical supply network.

3.15 Connecting a 3-wire Heat/Cold thermostat

As well as selecting the desired temperature and periods of operation, this type of chronothermostat can be used to select the operating mode (Heating/☀Cooling ❄ on the device itself).

This type of thermostat operates through 3 communication wires; one to activate the Heating mode signal, one to activate the Cooling mode signal and another one for the common signal. Depending on the status of each signal, the **ACQUA TRIO 170 OD** module will activate each circulation pump (**BC or BF**), corresponding to each Heating or Cooling mode, as follows:

Heating Mode	Cooling Mode	OFF (Stand By) (temp. reached)
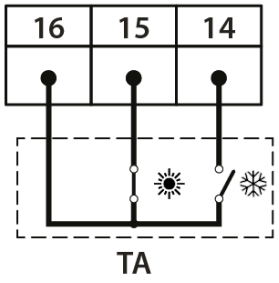	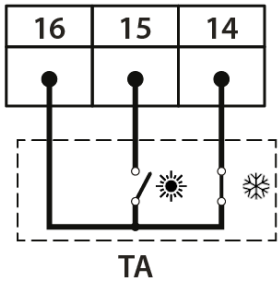	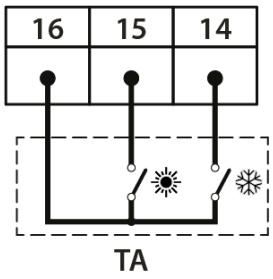
BC ➡ ON / BF ➡ OFF	**BC ➡ OFF / BF ➡ ON**	**BC ➡ OFF / BF ➡ OFF**

Terminals **14**, **15** and **16** are supplied from the factory with a bridge connecting them; therefore, to install this thermostat, it will be necessary to remove **both** bridges before connecting the thermostat, as shown in the figure below.

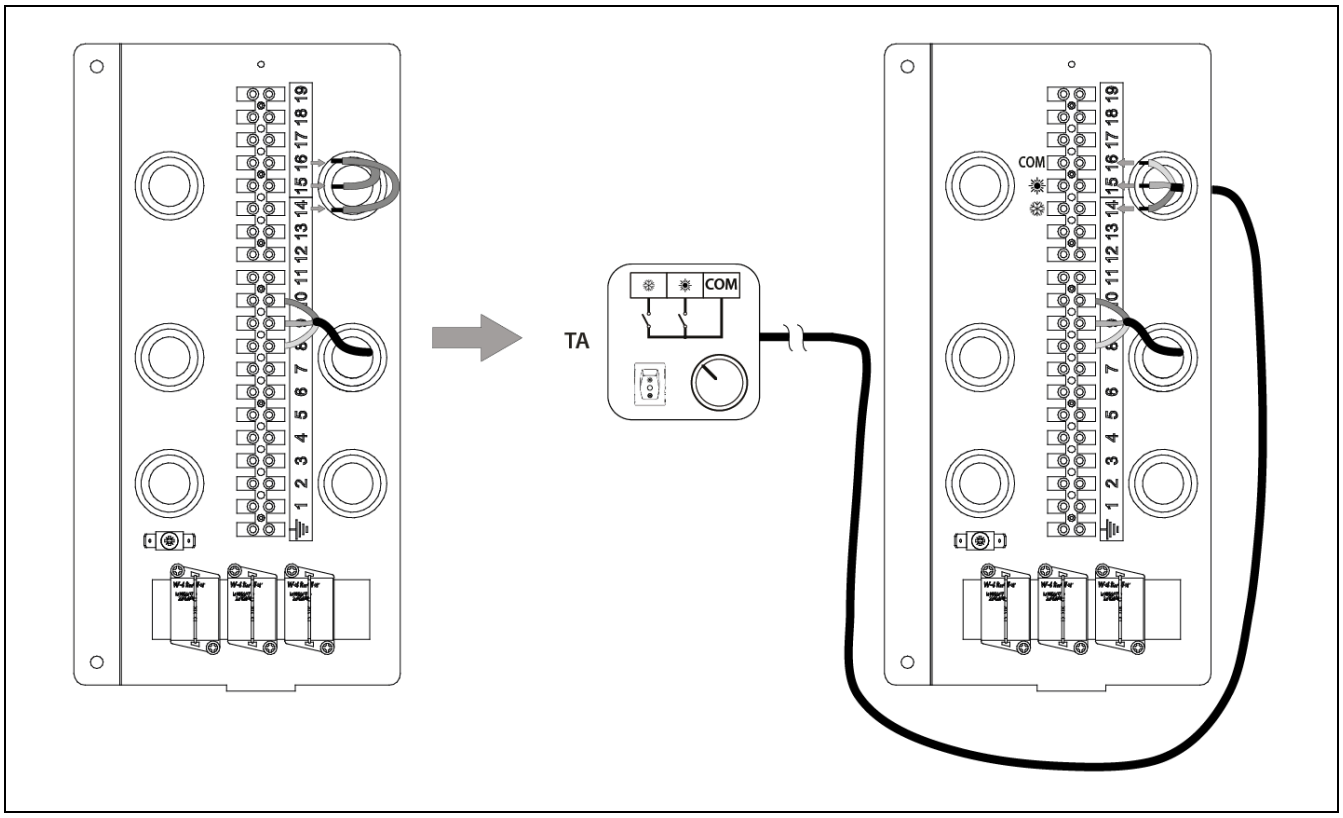

IMPORTANT: Whenever any work is done on the electrical installation of the heat pump, make sure it is disconnected from the main electrical supply network.

3.16 Connecting two ambient thermostats

In this type of configuration, 2 simple ambient thermostats are connected; one to terminals **14** and **16** (**TAF** thermostat for Cold) and the other to terminals **15** and **16** (**TAC** thermostat for Hot). Each of these will manage the operation of a different circulation pump (**BC** for Heating and **BF** for Cooling). Therefore, each thermostat must be compatible with the function it has to perform. The thermostat connected to the cold input (**TAF**) must be activated (closed circuit signal) when the ambient temperature is higher than the desired temperature (setpoint temperature) and the thermostat connected to the heat input(**TAC**) must be activated (closed circuit signal) when the ambient temperature is lower than the desired temperature (setpoint temperature).

The **FUSION HT** module will activate each circulation pump (**BC** or **BF**) corresponding to each Heating or Cooling mode, as follows:

Heating Mode	Cooling Mode	OFF (Stand By) (temp. reached)	Manual Mode
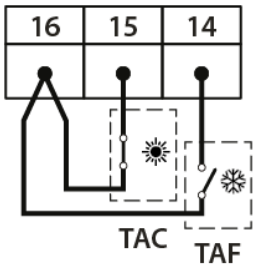	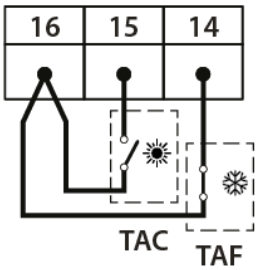	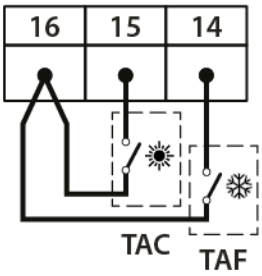	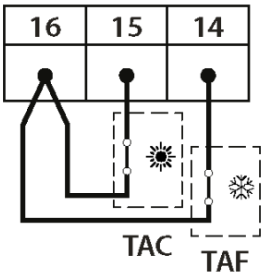
BC ➡ ON / BF ➡ OFF	**BC ➡ ON / BF ➡ OFF**	**BC ➡ OFF / BF ➡ OFF**	**BC ➡ ON / BF ➡ ON**

As shown in the figure, if the setpoint temperatures of the ambient thermostats are selected so that both require operation simultaneously, the hydraulic module control will switch to "Manual" mode; that is, both circulation pumps will be activated simultaneously. To prevent this from taking place, it is essential to **ensure that the temperature in each thermostat is selected correctly so they do not coincide, thereby preventing them from being activated at the same time.**

Terminals **14**, **15** and **16** are supplied from the factory with a bridge connecting them; therefore, to install these thermostats, it will be necessary to remove **both** bridges before connecting the thermostats, as shown in the figure below.

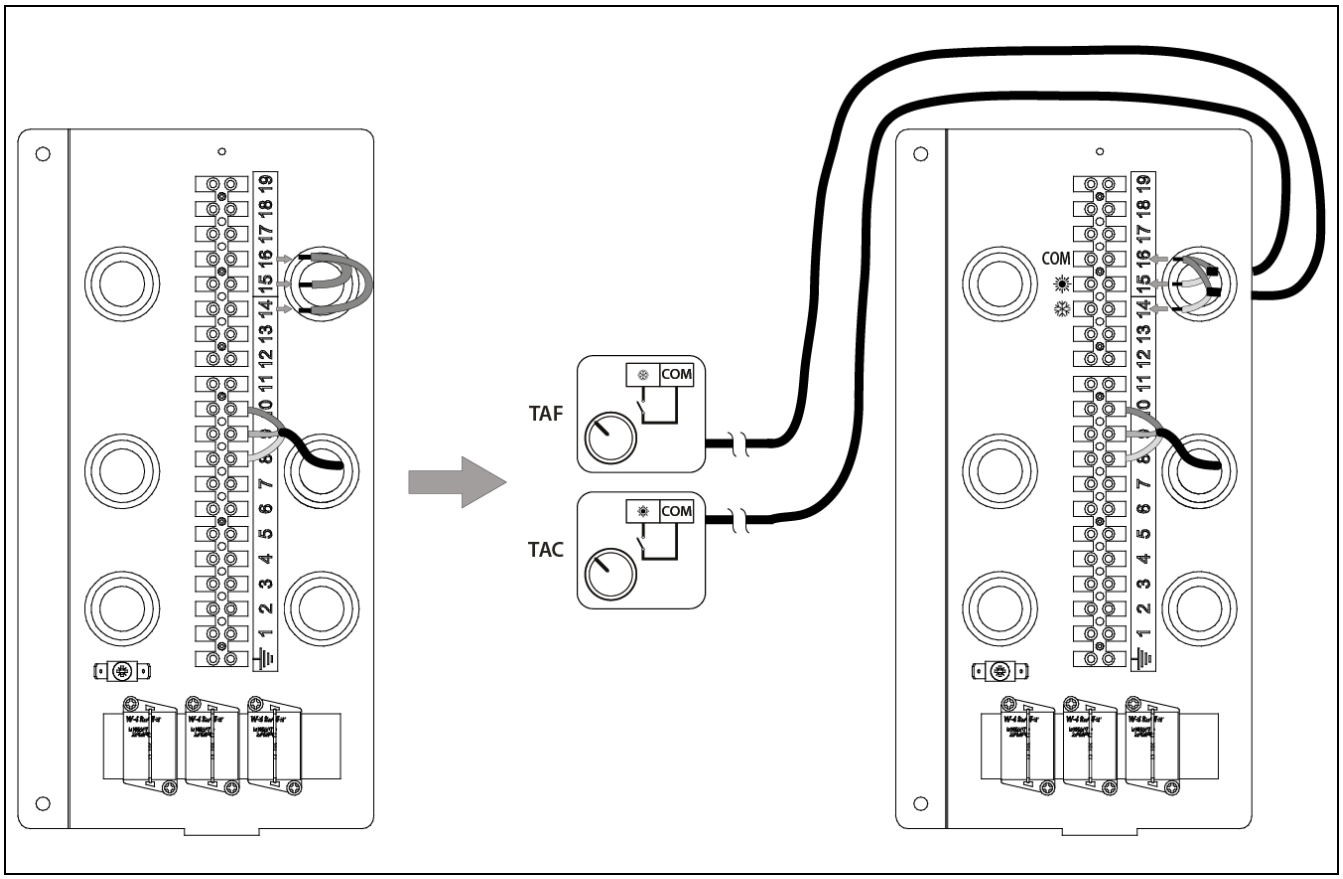

IMPORTANT: Whenever any work is done on the electrical installation of the heat pump, make sure it is disconnected from the main electrical supply network.

3.17 Connecting one ambient thermostat

In this type of configuration, a single simple ambient thermostat is connected; either to input terminals **14** and **16** (**TAF** thermostat for Cold) or to input terminals **15** and **16** (**TAC** thermostat for Hot). For this ambient thermostat management configuration to work properly, the heat pump must be set up for **a single** operating mode, either Heating or Cooling (see the instruction manual supplied with the **DUAL CLIMA HT** heat pump). The thermostat will activate one of the circulation pumps (**BC** for Heating or **BF** for Cooling), depending on which input it is connected to, and the ambient thermostat must be prepared for this. The thermostat connected to the cold input (**TAF**) must be activated (closed circuit signal) when the ambient temperature is higher than the desired temperature (setpoint temperature) and the thermostat connected to the heat input (**TAC**) must be activated (closed circuit signal) when the ambient temperature is lower than the desired temperature (setpoint temperature).

Terminals **14**, **15** and **16** are supplied from the factory with a bridge connecting them; therefore, to install this thermostat, it will be necessary to remove **both** bridges before connecting the thermostat, as shown in the figure below, depending on the operating mode:

Thermostat for Heat (management of the BC pump)

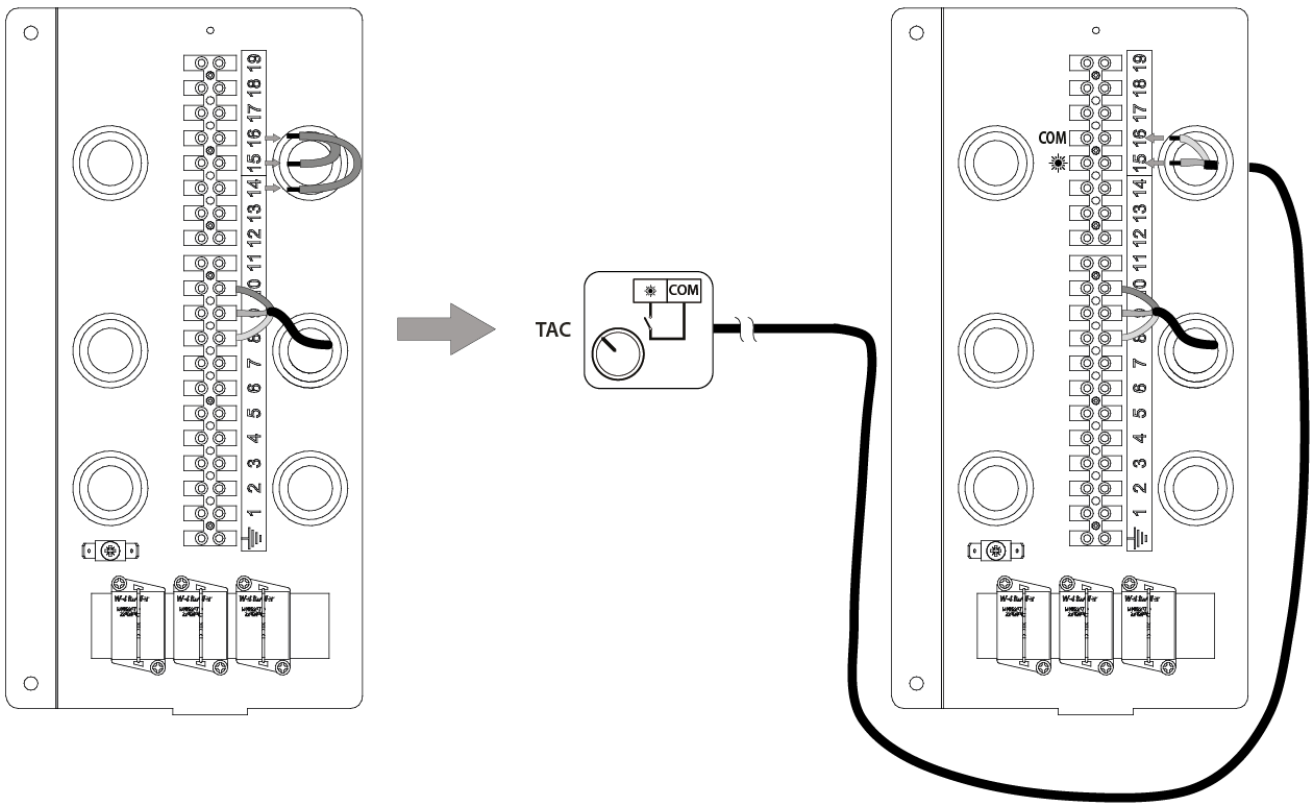

Thermostat for Cold (management of the BF pump)

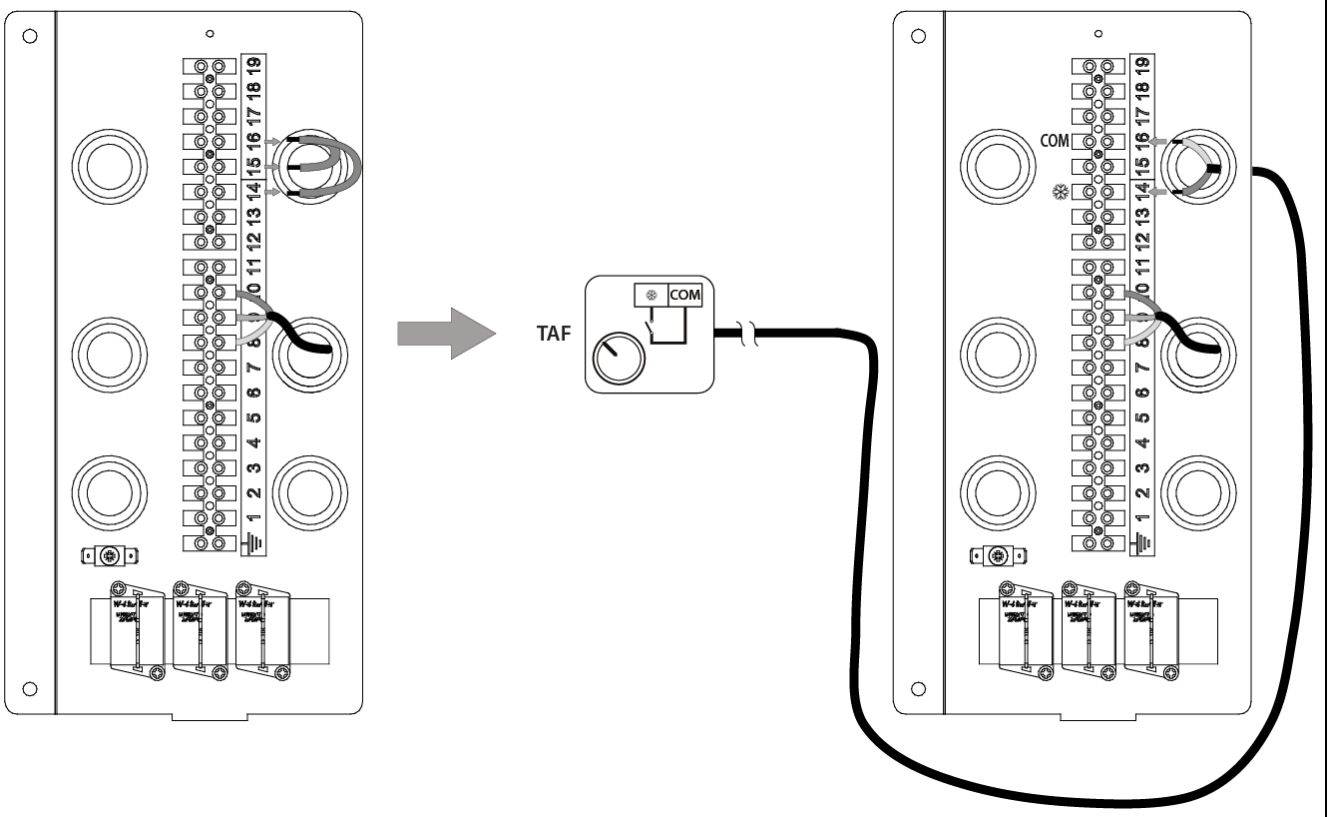

IMPORTANT: Whenever any work is done on the electrical installation of the heat pump, make sure it is disconnected from the main electrical supply network.

3.18 Filling the installation

Along with its documentation, model **ACQUA TRIO 170 OD** is supplied with a filling kit consisting of a filling disconnector and a pressure gauge that should be installed in an accessible location. This disconnector is used to fill the complete Heating/Cooling installation with water, including the outdoor unit and the DHW storage tank heat exchanger. The hydraulic installation also includes air vents and the hydraulic components required for correct filling.

To fill, simply open the filling disconnector valves until the pressure gauge shows a pressure between 1 and 1.5 bar. The heat pump is equipped with a manual air vent valve at the top of the flow pipe of the heat exchanger (condenser). Open this air vent during filling and wait until water starts flowing out (refer to the Instruction Manual of the **DUAL CLIMA HT** heat pump). The **ACQUA TRIO 170 OD** hydraulic model has automatic air vents at the top. The rest of the installation must also be bled using the air vent valve provided for that purpose. Filling should be slow so the air can be evacuated from the water circuit. Once the installation is full, close the filling disconnector valves.

IMPORTANT: Starting up the heat pump with no water can cause serious damage to the equipment.

3.19 Draining the primary circuit

The **ACQUA TRIO 170 OD** hydraulic module has a drain valve to drain the water from the primary circuit installation. To drain properly, connect a flexible hose to the corresponding valve and place the other end at a drain.

3.20 Precautions against freezing

During periods of freezing and especially in geographical locations subject to very low temperatures, precautions should be taken to prevent the water in the primary circuit from freezing and the subsequent damage to the installation. It is advisable to add anti-freeze to the water in the primary circuit of the buffer tank. The anti-freeze must be compatible with public hygiene standards. Optionally, the **DUAL CLIMA HT** heat pump can be equipped with anti-freeze discharge valves that can be installed in its interior. The **ACQUA TRIO 170 OD** hydraulic module includes these interior valves as standard equipment for protection. See the section titled "*Warnings about anti-freeze protection*" in this manual.

IMPORTANT: If the installation is going to be out of service for a long period of time, it is recommended to drain the water from the tank.

4 RECYCLING AND DISPOSAL

Uninstallation

This product must be uninstalled by personnel authorised to handle fluorinated gases. The heat pump contains R290 coolant.

Recycling

The heat pump should be taken to a waste collection point for recycling or disposal. Personnel authorised to handle fluorinated gases should be notified. Contact the installer or local authorities for more information.

Disposal

Do not attempt to uninstall this product on your own. Uninstallation, treatment of the coolant, oil and other components must be carried out according to local and national legislation. All the equipment, including the compressor and the oil within it must be taken to a waste collection point, given that they may contain remaining coolant.

5 OPERATION

The **ACQUA TRIO 170 OD** hydraulic module is a passive accessory and, therefore, its operation is managed by the control unit of the **DUAL CLIMA HT** heat pump that is connected to it and which should be mounted on the front of the module (see *"Assembling and connecting the control panel"*). To ensure proper set-up and operation of the control unit, carefully read the *"Installation and Operation Instruction Manual"* supplied with the heat pump.

The **ACQUA TRIO 170 OD** hydraulic module has an internal stainless steel tank for the production of DHW and a primary circuit "buffer" tank.

The minimum requirement necessary to make the most of all the features of the hydraulic module is for the DHW and Heating and/or Cooling services to be activated.

The **DUAL CLIMA HT** heat pump is configured in the factory to provide Heating, Cooling and DHW service. If the installation does not have one or more of these services, **THESE SHOULD BE DISABLED** by changing the parameters in the control panel. When a service is disabled, all the operating modes referring to that service will disappear from the control panel.

When installed alongside a **DUAL CLIMA HT** heat pump, the **ACQUA TRIO 170 OD** module can be used in DHW and Heating and/or Cooling installations, in combination with fan coils, underfloor heating and radiators. It must be connected to a Heating and/or Cooling installation and a domestic hot water distribution network compatible with its performance and power features.

5.1 Managing the Circulation Pumps in the Installation

The **ACQUA TRIO 170 OD** hydraulic module can manage the operation of up to 2 circulation pumps installed in the Heating and Cooling circuits of the Heating/Cooling installation, respectively. These pumps will be activated and deactivated by the signals received from the thermostats installed in the home and connected to the module (see *"Connecting the Ambient Thermostats"*). In turn, when these module signals are connected to the **DUAL CLIMA HT** heat pump (see *"Connecting to the **DUAL CLIMA HT** heat pump"*), the ambient thermostats will manage the operating modes of the outdoor unit by switching from Heating to Cooling mode according to the temperature conditions inside the home.

When a closed circuit signal is detected at the input of the ambient Heating thermostat (**TAC**), the Heating circulation pump (**BC**) will be activated and the Heating mode will be activated in the **DUAL CLIMA HT** outdoor unit. When a closed circuit signal is detected at the input of the ambient Cooling thermostat (**TAF**), the Cooling circulation pump (**BF**) will be activated and the Cooling mode will be activated in the **DUAL CLIMA HT** outdoor unit. When an open circuit signal is detected at the 2 **TAC** and **TAF** inputs, the 2 circulation pumps will remain deactivated and the operation mode of the **DUAL CLIMA HT** outdoor unit will switch to **"Stand By"**.

This procedure may vary, depending on the type of thermostat(s) installed in the home. The *"Connecting the ambient thermostats"* section of this manual describes in detail the operation and management of the circulation pumps for each type of installation.

6 OPTIONAL ACCESSORIES

To complete the performance features offered by the **ACQUA TRIO 170 OD** hydraulic module, **DOMUSA TEKNIK** offers an optional wide range of accessories that can be included **inside** the module. The sections below provide an explanation about how to assemble and connect these accessories correctly.

6.1 Assembly and connection of a backup element kit for DHW (optional)

The **ACQUA TRIO 170 OD** hydraulic module can be equipped with a **1500 W** backup heating element KIT for DHW. This heating element enables DHW production at temperatures over 50ºC, while also allowing the **DUAL CLIMA HT** heat pump to run in cooling mode while the heating element heats the DHW. This heating element is activated manually by the **IR** switch (heating element switch), located inside the control panel compartment of the **ACQUA TRIO 170 OD** module. Take the following steps to install the KIT correctly:

- Disassemble and remove the side cover of the **ACQUA TRIO 170 OD** module and remove the insulation.
- Remove the elliptical cover of the DHW storage tank and replace it with the elliptical cover equipped with the heating element connection included in the kit (max. 1500 W).
- Disassemble and remove the original elliptical cover of the DHW storage tank and replace it with the elliptical cover equipped with the backup element connection included in the kit.
- Mount the heating element on the elliptical cover of the KIT and seal the thread.
- Locate the electrical connections strip of the **ACQUA TRIO** hydraulic module inside the module and remove the cover of the connections strip.
- Connect the cable of the heating element to terminals **3** y **4** of the electrical connections strip of the **ACQUA TRIO** hydraulic module, which is inside the module (see "Electrical diagram").
- Connect the heating element to an external power supply (230V~). This is done by connecting an electric cable with an external power supply (not supplied in the Kit) to terminals **1** y **2** on the electrical connections terminal strip of the **ACQUA TRIO** hydraulic module.
- Set the desired temperature of the DHW on the thermostat included in the heating element.
- Use the control unit to activate the IR heating element switch located at the top by setting it to "I" for the DHW to be heated by the heating element or "0" for the DHW to be heated by the heat pump.
- For the DHW to be heated only by the heating element and the heat pump to run simultaneously in cooling mode, select **DHW MODE** deactivated on the heat pump control panel.

IMPORTANT: If the DHW support heater exceeds 1,500 W of power, a relay must be placed between the terminals of the terminal block and the heater.

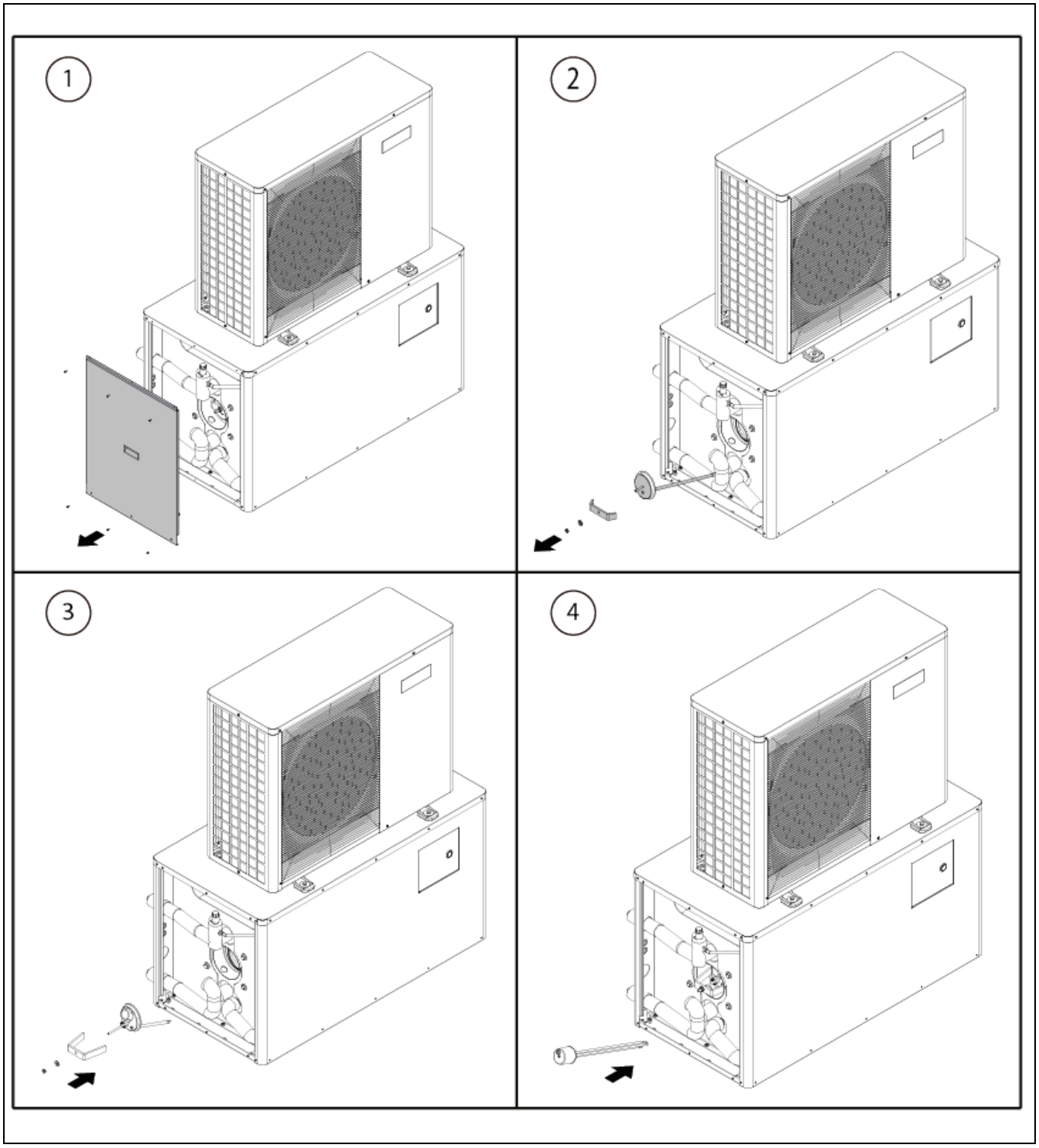

6.2 Cathodic protection (optional)

When the concentration of chlorides in the Domestic Water exceeds 250 mg/l, it is advisable to install a cathodic protection to prevent premature erosion of the storage tank. **DOMUSA TEKNIK** supplies optional electronic cathodic protection for each of its range of storage tanks. To install, please read the assembly instructions provided with this accessory carefully.

6.3 Assembly and connection of the backup element kit for Heating (optional)

The **ACQUA TRIO 170 OD** hydraulic module is prepared for the assembly of a backup heating element KIT. This heating element will increase performance when the outdoor weather conditions require it. Take the following steps to install the KIT correctly:

- Disassemble and remove the side cover and the rear cover of the **ACQUA TRIO 170 OD** hydraulic module to locate the plug of the heating element.
- Remove the insulation from the heating element connection.
- Dismount and remove the plug of the heating element connection and replace it with the heating element supplied with the Kit, making sure to seal it correctly.
- Fasten the connections box supplied with the Kit in the position shown, using the screws provided with the module.
- Locate the electrical connections strip of the heating element Kit box.
- Connect the heating element activation signal from the connections box of the Kit to the **DUAL CLIMA HT** heat pump. This connection is made from terminals **E2L (5)** and **E2N (6)** (Neutral) of the **DUAL CLIMA HT** heat pump components strip and terminals **5** and **6** of the electrical connections strip of the backup heating element Kit box (see "Electrical connections diagram of the Kit box"). To make the connections, an electrical cable (supplied in the **DOMUSA TEKNIK** heating element Kit) should be connected from the **ACQUA TRIO 170 OD** module to the heat pump. The hydraulic module has several cable feedthroughs, one of which can be used to extract the cable from inside the equipment.
- Connect the heating element between terminals 3 and 4 on the electrical connections strip of the heating element Kit box, (see "Electrical connections diagram of the Kit box").
- Connect the heating element to an external power supply (230V~). This is done by connecting an electric cable with an external power supply (not supplied in the Kit) to terminals 1 and 2 on the electrical connections strip of the heating element Kit box. The cable section and the electrical power supply must be appropriate for the heating element to withstand.
- Set the desired temperature on the thermostat included in the heating element.
- Place the insulation again and mount the side and rear covers.

IMPORTANT: The E2 output relay that activates the heating element has a maximum consumption of 1A; therefore, connection of a heating element will require connecting a relay (supplied in the DOMUSA TEKNIK heating element Kit) between the strip terminals and the heating element.

IMPORTANT: Whenever any work is done on the electrical installation of the heat pump, make sure it is disconnected from the main electrical supply network.

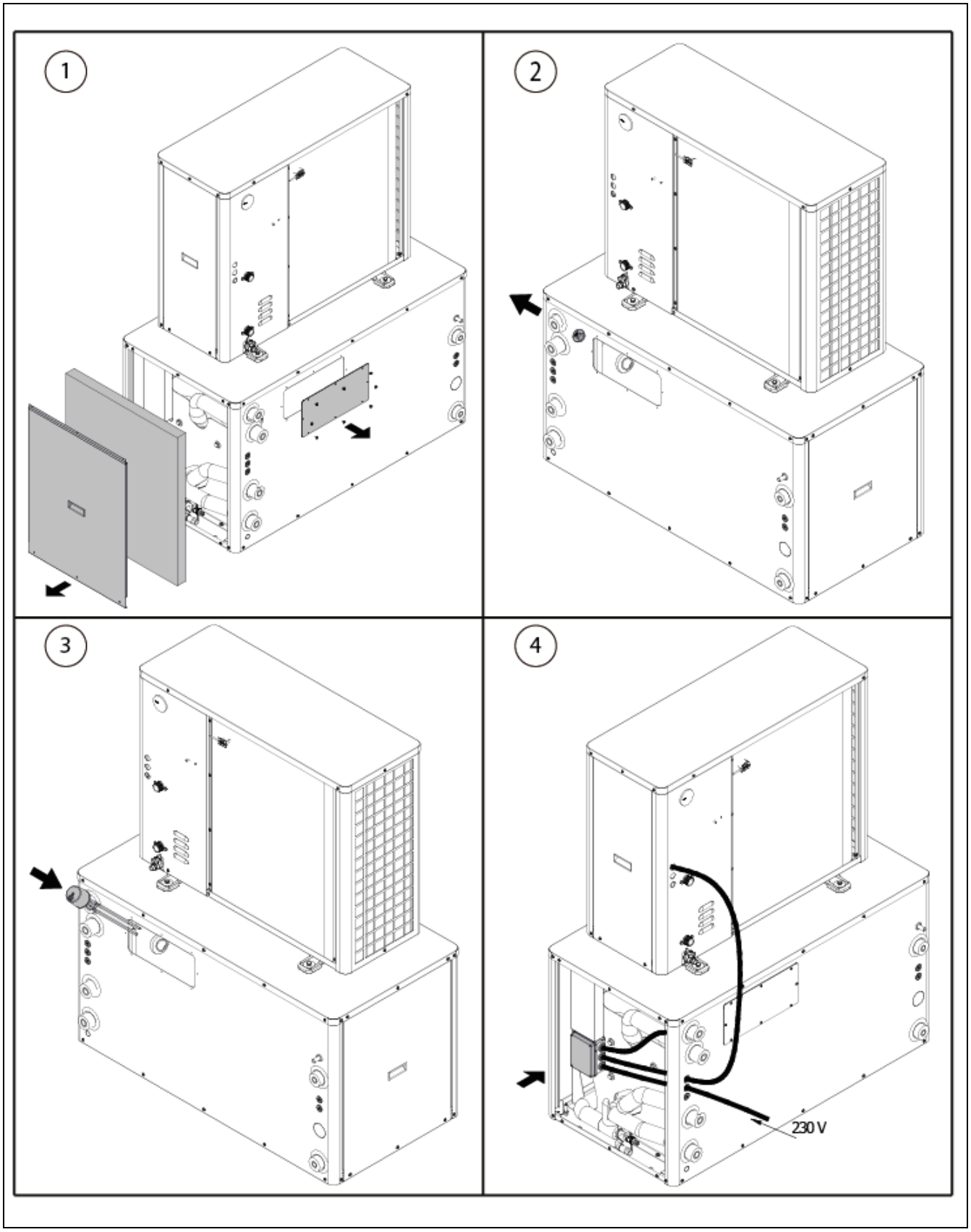
1
2
3
4
230 V

6.4 Electrical connections diagram of the Heating backup element kit box (E2) (optional).

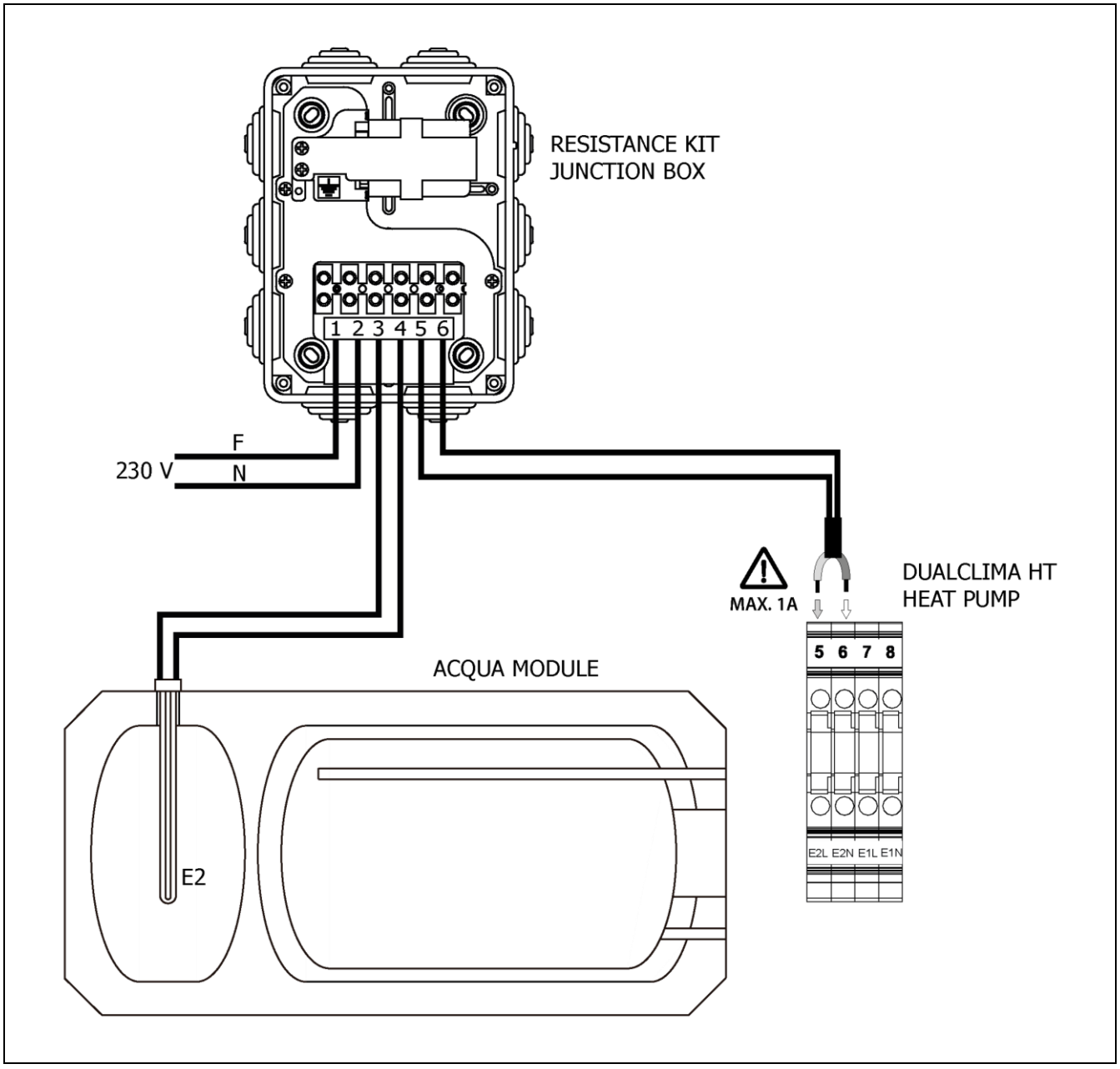

7 ELECTRICAL DIAGRAM

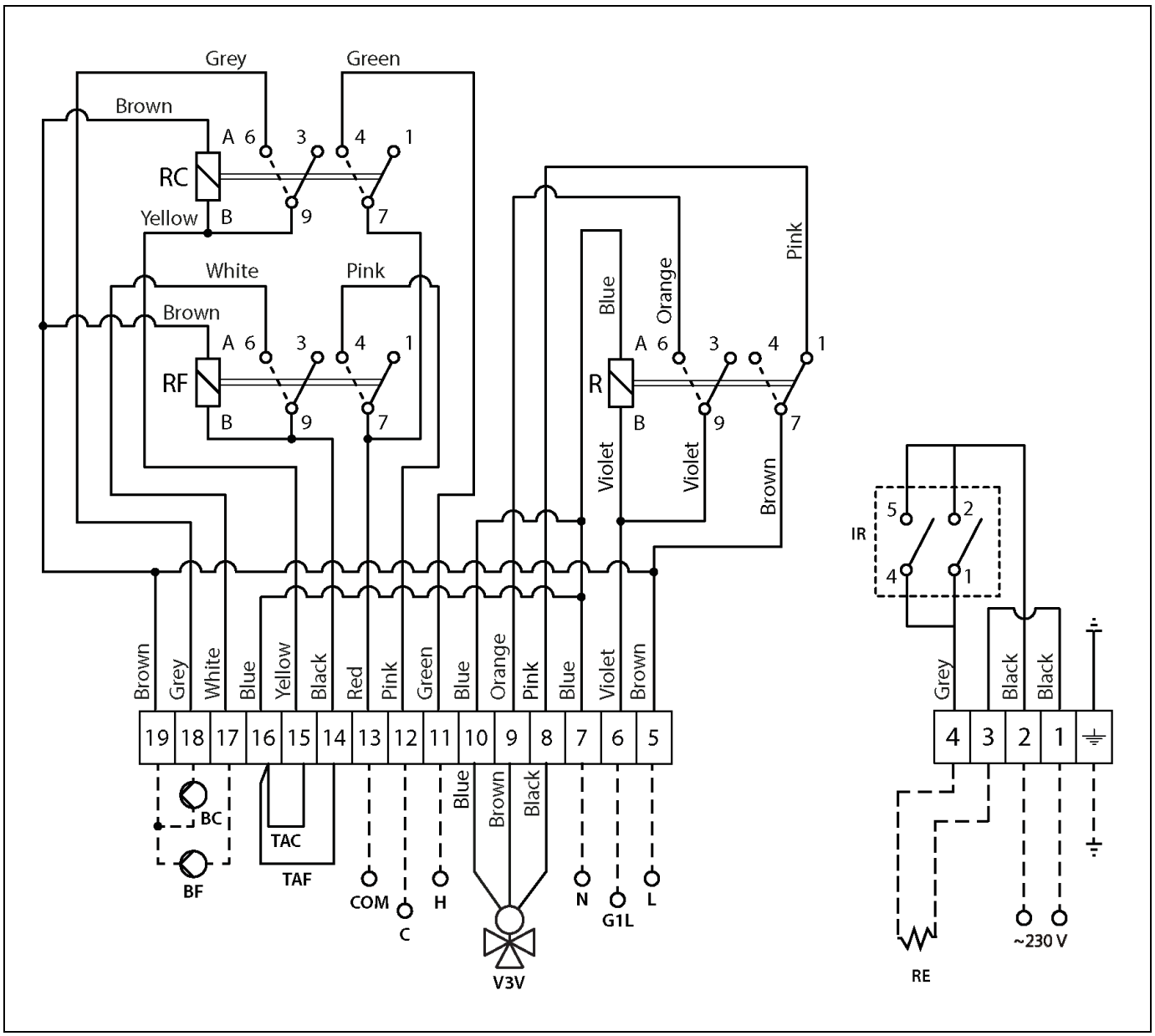

V3V: Inverter 3-way valve.

R: DHW 3-way valve relay.

G1L: Heat Pump DHW signal (NC).

L: Heat Pump Heating signal (NO).

N: Heat Pump shared signal (Neutral).

RE: DHW heating element 1.5 kW.

TR:Heating element internal thermostat.

IR:Heating element switch.

IMPORTANT: Starting up the heat pump with no water can cause serious damage to the equipment. Dimensions and assembly

8 DIMENSIONS

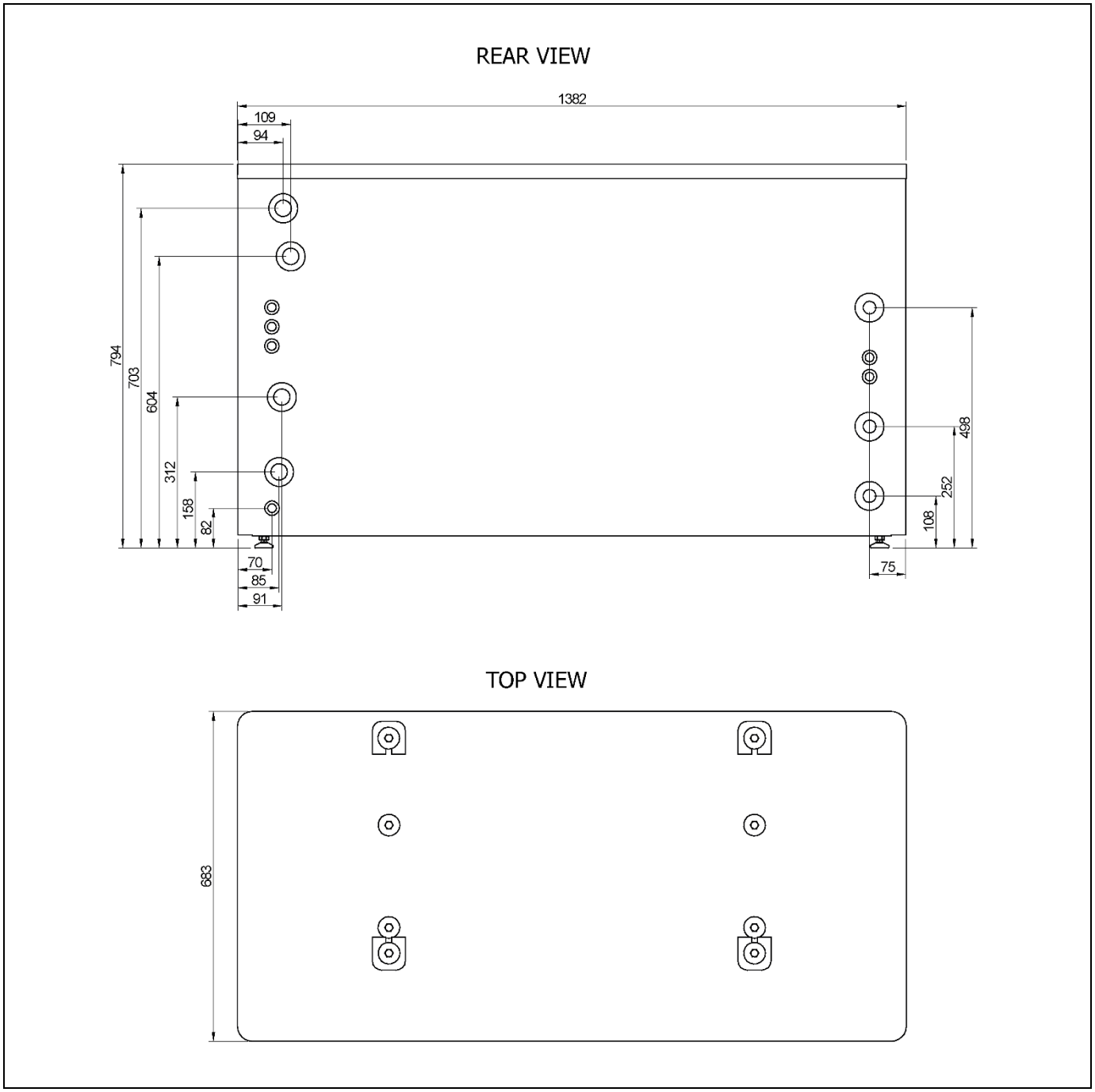

DHW: DHW outlet, (3/4" M fitting).

DCW: Domestic cold water intake (3/4" M fitting).

RBC: Primary circuit return to the heat pump (1" M fitting).

RC: Heating/Cooling circuit return (1" M fitting).

IHP: Primary circuit intake from the heat pump (1" M fitting).

IC: Heating/Cooling outlet, Ø22 (1" M fitting).

R: DHW recirculation connection, (3/4" M fitting).

V: Draining.

9 TECHNICAL CHARACTERISTICS

DHW volume	97 litres
Primary circuit Buffer volume	28 litres
Net weight(*)	160 Kg
Weight when full(*)	314 Kg

(*) The weight of the heat pump should be added to the total weight (refer to the DUAL CLIMA HT heat pump manual)

DOMUSA TEKNIK

POSTAL ADDRESS
Apartado 95
20730 AZPEITIA
Tel.: (+34) 943 813 899

FACTORY AND OFFICES
Bº San Esteban s/n
20737 ERREZIL (Gipuzkoa)
Fax: (+34) 943 815 666

CDOC004021 01/12/25

www.domusateknik.com

DOMUSA TEKNIK reserves the right to make changes to the characteristics of its products without prior notice.