DOMUSA TEKNIK

DUAL CLIMA HT PRO

Air/water heat pump

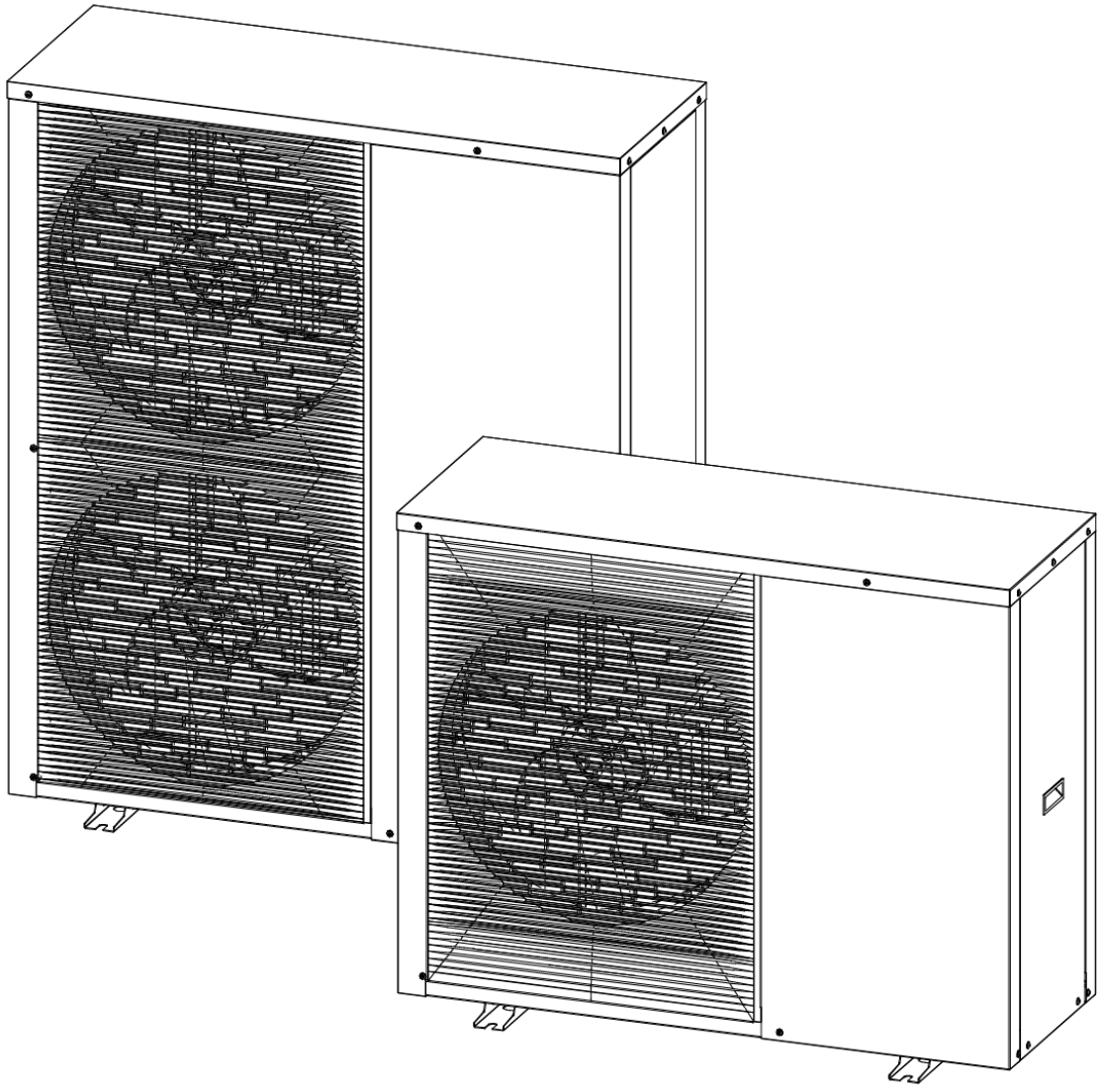

EN | INSTALLATION AND OPERATING INSTRUCTIONS

Thank you for choosing a **DOMUSA TEKNIK** heat pump. From the range of **DOMUSA TEKNIK** products you have chosen the **DUAL CLIMA HT PRO** model. With a suitable hydraulic installation, this heat pump will provide the ideal level of comfort for your home.

This document constitutes an essential part of the product and must be delivered to the end user. Read the warnings and recommendations in the manual carefully, as they contain important information on the safety, use and maintenance of the installation.

This heat pump must be installed by qualified personnel only, in accordance with the legislation in force and following the manufacturer's instructions.

Start-up of this heat pump and any maintenance operations must only be carried out by **DOMUSA TEKNIK**'s Authorised Technical Assistance Services.

Incorrect installation of this heat pump could result in damage to people, animals or property, for which the manufacturer will hold no liability.

CONTENTS

1 SAFETY WARNINGS 6
1.1 USE AND INSTALLATION WARNINGS 6
1.2 PERSONAL SAFETY WARNINGS 6
1.3 TRANSPORT, STORAGE AND HANDLING WARNINGS 7
1.4 FREEZE PROTECTION WARNINGS 7
1.5 HEAT PUMP REFRIGERANT WARNINGS 8
2 ELECTRONIC CONTROL UNIT 9
2.1 CONTROL UNIT 9
2.2 ICONS ON THE CONTROL UNIT 10
2.3 DATE AND TIME SETTINGS 11
3 SWITCHING THE HEAT PUMP ON AND OFF 12
4 OPERATION 12
4.1 SELECTING MANUAL OPERATING MODES 12
4.2 COOLING MODE 13
4.3 HEATING MODE 13
4.4 DHW MODE 13
4.5 COOLING AND DHW MODE + ... 13
4.6 HEATING AND DHW MODE + ... 14
4.7 FUNCTIONING IN HEATING/COOLING "AUTO" MODE 14
4.8 FUNCTIONING WITH ROOM SENSOR 15
4.9 FUNCTIONING ACCORDING TO OUTDOOR TEMPERATURE CONDITIONS (OTC) 16
4.10 FUNCTIONING IN "AUTO" MODE WITH A ROOM THERMOSTAT 16
4.11 SILENT MODE 18
4.12 ANTI-LEGIONELLA FUNCTION 18
4.13 SG READY FUNCTION 18
5 TEMPERATURE SELECTION 21
5.1 SETTING THE COOLING MODE SETPOINT TEMPERATURE 21
5.2 SETTING THE HEATING MODE SETPOINT TEMPERATURE 21
5.3 SETTING THE DHW MODE SETPOINT TEMPERATURE 22
5.4 ADJUST THE ZONE 1 ROOM TEMPERATURE SETPOINT 22
5.5 ADJUSTING THE ANTI-LEGIONELLA FUNCTION SETTINGS 22
5.6 SETTING THE SG READY FUNCTION SETPOINTS 23
6 INSTALLATION INSTRUCTIONS 24
6.1 ACCESSORIES SUPPLIED 24
6.2 LOCATION 24
6.3 FIXING THE HEAT PUMP 26
6.4 CONDENSATE DRAINAGE 27
6.5 HYDRAULIC INSTALLATION 27
6.6 HEATING WATER SPECIFICATIONS 30
6.6.1 Filling the installation 30
6.6.2 Draining the heat pump 31
6.6.3 Installing a degasifier 31
6.6.4 Installing a DHW tank 32
6.7 ELECTRICAL CONNECTIONS 33
6.7.1 Connection to the mains network 33
6.7.2 Control panel connection 34
6.7.3 Connecting the DHW sensor 35
6.7.4 Connecting a backup energy source for ACS (E1) 35
6.7.5 Connecting the DHW diverter valve (G1) 38
6.7.6 Connecting a backup energy source for Heating (E2) 39
6.7.7 Connecting the Heating/Cooling diverter valve (G2) 41
6.7.8 Connecting the backup pump (C2 and C3) 41
6.7.9 Connecting a room sensor or thermostat (Optional) 42
6.7.10 Connecting an outdoor temperature sensor OTC (Optional) 43

6.7.11 Connecting the iConnect module (Optional) 44
6.7.12 Installation with wireless devices Confort iC and/or Sonda iC (Optional) 44
6.7.13 Connecting an AIR Hydraulic Kit 45
6.7.14 Connecting room thermostats for "AUTO" mode 45
6.7.15 SG Ready connection 49
6.8 FREEZE PROTECTION 50
6.8.1 DHW mode anti-freeze process 51
6.8.2 Heating/Cooling mode anti-freeze process 51
7 HEAT PUMP CONFIGURATION 52
8 TIME PROGRAMMING 53
9 WIRELESS DEVICES CONFORT IC AND SONDA IC (OPTIONAL) 54
10 *"ICONNECT"* CONNECTIVITY 55
11 AIR HYDRAULIC KITS (OPTIONAL) 55
12 USER MENU 56
13 SETTINGS MENU 57
13.1 SYSTEM PARAMETERS 57
13.2 OPERATING STATUS 59
13.3 PAIR WIRELESS DEVICES 61
14 SETTING UP THE HEATING/COOLING CIRCUITS 63
14.1 OPERATION OF THE CIRCULATION PUMP (P20) 63
14.2 ZONE 2 COMBINED CIRCUIT TEMPERATURE LIMIT (P165) 63
14.3 ROOM DEVICE TYPE (P150, P151, P152) 63
14.4 ROOM TEMPERATURE HYSTERISIS (P117, P118) 64
14.5 ROOM TEMPERATURE CORRECTION (P146, P147, P148) 64
15 CONFIGURING THE AUXILIARY OR BACKUP ENERGY SOURCES (E1, E2) 65
15.1 BACKUP SOURCE MODE (P81 = 0) 66
15.2 AUXILIARY SOURCE MODE (P81 = 1) 66
15.3 PASSIVE COMBINED MODE (P81 = 2) 67
15.4 ACTIVE COMBINED MODE (P82 = 3) 67
15.5 COMBINED STAGE MODEPAS (P81 = 4) 67
16 START-UP 69
16.1 PRIOR WARNINGS 69
16.2 START-UP 69
16.3 INSTALLATION HANDOVER 69
17 MAINTENANCE 70
18 RECYCLING AND DISPOSAL 70
19 DIAGRAMS AND MEASUREMENTS 71
20 ELECTRICAL DIAGRAMS 72
20.1 NOMENCLATURE 72
20.2 DUAL CLIMA 6HT PRO 73
20.3 DUAL CLIMA 9HT PRO 74
20.4 DUAL CLIMA 12HT PRO 75
20.5 DUAL CLIMA 16HT PRO 76
20.6 DUAL CLIMA 19HT PRO 77
20.7 DUAL CLIMA 12HTT PRO 78
20.8 DUAL CLIMA 16HTT PRO 79
20.9 DUAL CLIMA 19HTT PRO 80
20.10 DUAL CLIMA 22HTT PRO 81
21 TECHNICAL CHARACTERISTICS 82
22 CIRCULATION PUMP CHARACTERISTICS 84
22.1 CIRCULATION PUMP FLOW CURVES 84
22.2 HEAT PUMP PRESSURE DROP 85
22.3 CIRCULATION PUMP ADJUSTMENT 85
23 ALARM CODES 86

1 SAFETY WARNINGS

1.1 Use and installation warnings

The **DUAL CLIMA HT PRO** heat pump must be installed by personnel authorised by the Ministry of Industry, in compliance with the applicable laws and regulations. The precautions detailed here cover very important issues. Please be sure to follow them carefully.

Please carefully read this instruction manual and keep it in a safe, easily-accessible place. **DOMUSA TEKNIK** will not be liable for any damages caused by failure to follow these instructions.

This heat pump is suitable for use in both heating and cooling installations and can be combined with fan coils, underfloor heating/cooling, low-temperature radiators, and domestic hot water tanks (optional). It must be connected to a heating/air conditioning installation and/or a domestic hot water distribution network and compatible with its performance and power.

This appliance should only be used for the purpose for which it has been expressly designed. Any other use is considered unsuitable and therefore hazardous. The manufacturer shall not be considered liable under any circumstances for damage caused by unsuitable, erroneous or improper use.

Remove all the packaging and check that the contents are complete. In case of doubt, do not use the heat pump and contact your supplier. The packaging components must be kept out of the reach of children, as they constitute potential sources of danger.

Improper installation or placement of equipment or accessories may cause electrocution, short circuit, leakage, fire or other damage to the equipment. Use only accessories or optional equipment manufactured by **DOMUSA TEKNIK** and specifically designed to work with the products in this manual. Do not modify, replace or disconnect any safety or control device without first consulting the manufacturer or the Official Technical Assistance Service of **DOMUSA TEKNIK**.

When you no longer wish to use the heat pump, disable the parts that could represent a potential hazard.

1.2 Personal safety warnings

Always wear suitable personal protection equipment (protective gloves, safety glasses, etc.) when carrying out installation and/or maintenance operations in the unit.

Do not touch any switches with wet hands. Touching a switch with wet hands may cause electric shock. Before accessing the electrical components of the heat pump, disconnect the power supply completely.

Disconnect all electricity sources before dismantling the service panel from the electric panel or before making any connections or accessing electrical parts.

To avoid electrocution, ensure the power is turned off for at least 1 minute before servicing the electrical parts. Even after 1 minute has elapsed, always measure the voltage at the terminals of the main circuit capacitors and other electrical parts before touching them, and make sure the voltage is 50 VDC or less.

When the service panels are disassembled, the live parts can be easily accessed. Never leave the unit unattended during installation or during maintenance work when the service panel is removed.

Do not touch the refrigerant pipes, water piping, or internal parts during or immediately after operation. Pipes and internal parts may become very hot or cold, depending on the use of the unit.

The heat or cold could burn your hands if you touch the pipes or internal parts in these conditions. To avoid injury, wait until the pipes and internal parts return to their normal temperature. Alternatively, if you need to access them, be sure to wear appropriate safety gloves.

1.3 Transport, storage and handling warnings

The **DUAL CLIMA HT PRO** heat pump must be transported, handled and stored in vertical position. Placing the appliance on its side can cause the oil inside the compressor to spill out, causing premature compressor breakage on start-up.

OK



NOT OK

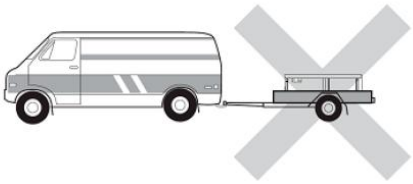

Do not twist, loosen or pull the external electric cables of the heat pump. Do not insert any sharp objects through the fan grille or into the fan itself.

Do not clean the interior of the heat pump with water as this may result in electric shock or fire. For any cleaning and/or maintenance operations, disconnect the main power supply.

1.4 Freeze protection warnings

The **DUAL CLIMA HT PRO** is an appliance for installation on the outside of the building and it will consequently be exposed to frost during periods of extremely cold weather. Frost protection is therefore very important for this type of appliance. If the water inside the heat pump freezes it can cause the pump to break, stopping its functioning and making costly repairs necessary.

It is **compulsory** to use an anti-freeze system in the installation to prevent the water in the units from freezing **DOMUSA TEKNIK** recommends using anti-freeze liquid in the pump water circuit or an anti-freeze release valve system for draining the installation at very low temperatures. Please read the "Freeze Protection" section in this manual carefully for more detailed information on these systems. **DOMUSA TEKNIK's guarantee does not cover any damage caused by failing to use a freeze protection system.**

The **DUAL CLIMA** heat pump's electronic control has a function for protecting the water inside it from freezing during periods of frost. **For this function to remain enabled and on standby, the heat pump must be connected to the mains and have a power supply, even when it is switched off or not in use.**

A water filter must be installed in the installation in order to avoid obstructions in the heat pump water circuit. It must be installed on the heat pump's return circuit, and it **MUST** be installed before filling and circulating the water through the installation. The water filter must be checked at least once a year and cleaned if necessary, although in new installations it is recommended to check it a few months after start-up.

1.5 Heat pump refrigerant warnings

The **DUAL CLIMA HT PRO** contains **R290** refrigerant gas, which is highly flammable. In normal conditions of use, there is no risk of explosion and the refrigerant is non-toxic. However, in case of leakage, some aspects that could cause damages to third-parties must be taken into account, as the refrigerant could create a flammable atmosphere and give rise to fire or explosion.

All maintenance work must be carried out by qualified staff aware of the dangers of handling refrigerant gases.

IMPORTANT: The refrigerant gas contained in the heat pump is highly flammable and can cause damage to persons or property.

The main considerations to be taken into account are as follows:

- The heat pump refrigerant must be recovered for recycling or disposal in accordance with the current legislation.
- In case of leakage, any contact with the refrigerant gas could cause burns. To prevent injury, use the necessary safety protection and avoid contact with the refrigerant gas.
- Leakage could create a flammable atmosphere, giving rise to fire or explosion. As soon as any leakage is detected you must therefore ventilate the area and stay away from the appliance until all the gas has been correctly ventilated.
- The refrigerant must not come into contact with any sparks or sources of ignition. Refrigerant leaks must be detected using suitable devices for R290 refrigerant gas.
- It is **compulsory** to use a safety system in the installation for the case of refrigerant leaks. **DOMUSA TEKNIK** advises installing a degasifier in the pump water circuit. Please read the section "*Installing a degasifier*" in this manual carefully for more detailed information on this system. **DOMUSA TEKNIK will not be liable for any damages caused by failing to have a safety system in place for refrigerant leakage.**
- The heat pump must be installed by qualified personnel and in compliance with all current regulations.

2 ELECTRONIC CONTROL UNIT

2.1 Control unit

The electronic control unit of the **DUAL CLIMA HT PRO** heat pump has a touchscreen for controlling all the adjustable functions and settings.

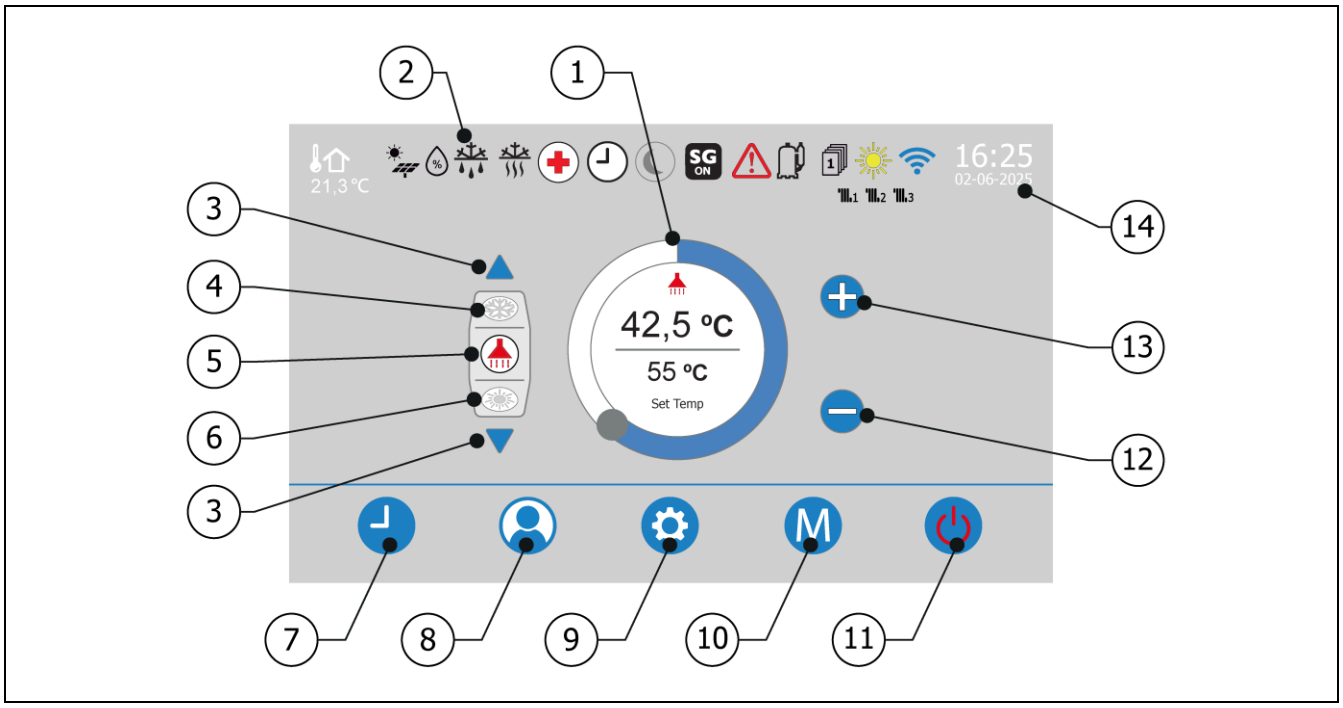

1. Temperature control knob:

Press this button to change the temperature for the different operating modes.

2. Status indicator:

Display of heat pump running status indicator icons every moment. (See "*Icons on the control unit*").

3. Navigating arrows:

Click on these arrows to browse through the temperature display and setpoint selection screens.

4. Previous screen indicator:

This icon indicates the previous screen, which is accessed by pressing the bottom arrow.

5. Current screen indicator:

This icon indicates the current screen selection.

6. Next screen indicator:

This icon indicates the next screen, which is accessed by pressing the top arrow.

7. Programming Menu touch button:

Press this button to access the heat pump programming menu. (See "*Time programming*").

8. User Menu touch button:

Press this button to access the heat pump user menu. (See "*User Menu*").

9. Settings Menu touch button:

Press this button to access the heat pump configuration menu. (See "*Settings Menu*").

10. Operating Mode Menu touch button:

Press this button to access the different operating modes. (See "*Selecting the operating modes*").

11. On/Off button:

This button switches the heat pump on and off.

12. "-" touch button:

Press this button to reduce the setpoint temperature for the different operating modes.

13. "+" touch button:

Press this button to increase the setpoint temperature for the different operating modes.

14. Date and time:

This selects and displays the date and time.

2.2 Icons on the control unit

The navigating arrows (**3**) of the main screen are used to select the real temperature display and to adjust the desired temperature setpoint for the various services available at any given time. The screen indicator icon (**5**) will show the selected screen:

Temperature selection screens	
	Heat Pump temperature in Cooling Mode.
	Heat Pump temperature in Heating Mode.
	DHW buffer tank temperature.
	Zone 1 room temperature in Sensor Mode.
	Zone 2 room temperature in Sensor Mode.
	Zone 3 room temperature in Sensor Mode.
	Zone 1 circuit water temperature.
	Zone 2 circuit water flow temperature.
	Zone 3 circuit water temperature.
OTC	OTC mode enabled.

The status icons shown at the top of the main screen (**2**) indicate the operating status of the Heat Pump in real time. These icons are listed in the following table:

Status icons	
	Outdoor temperature.
	De-icing function activated.
	Defrost function activated.
	Anti-legionella function activated.
	Time programming activated.
	Silent mode enabled.

Status icons	
	Silent mode 1 activated.
	Silent mode 2 activated.
SG ON	SG Ready function on mode.
SG OFF	SG Ready function off mode.
	Heat Pump alarm activated.
	Compressor on.
	Active operating mode at any time.
	Heat Pump registered in iConnect.
1	Zone 1 demand activated.
2	Zone 2 demand activated.
3	Zone 3 demand activated.

2.3 Date and time settings

The **DUAL CLIMA HT PRO** heat pump has a date and time indicator (**14**), for managing some of its functions. It is therefore vital to set the correct date and time on starting up the heat pump.

When the heat pump is registered in iConnect ( ), the time and date are updated automatically, so no changes are needed.

Press on the time indicator on the start screen to accede to time and date setup screen.

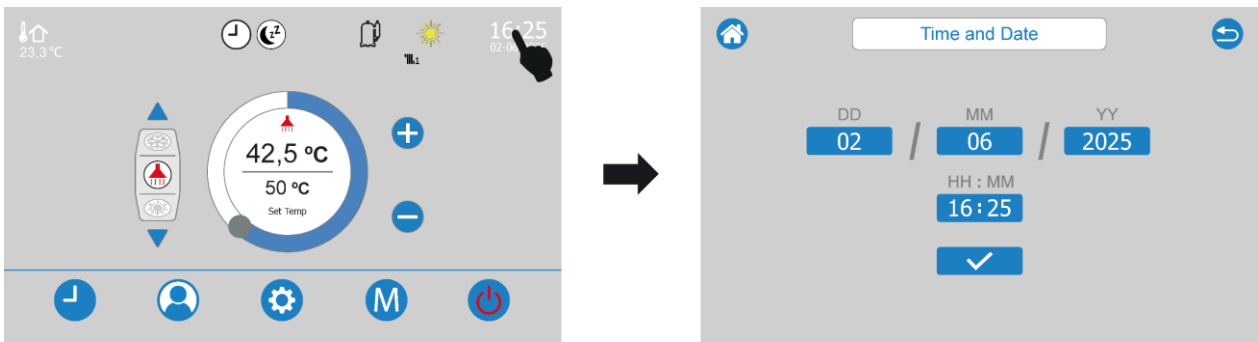

NOTE: An incorrect date and time setting may cause some features to malfunction.

3 SWITCHING THE HEAT PUMP ON AND OFF

To switch on the heat pump, press the On button (**11**) for 5 seconds. The heat pump will switch on in the last previously selected operating mode and the On button will light up in red. Different operating mode icons will light up on the digital display depending on the operating mode selected.

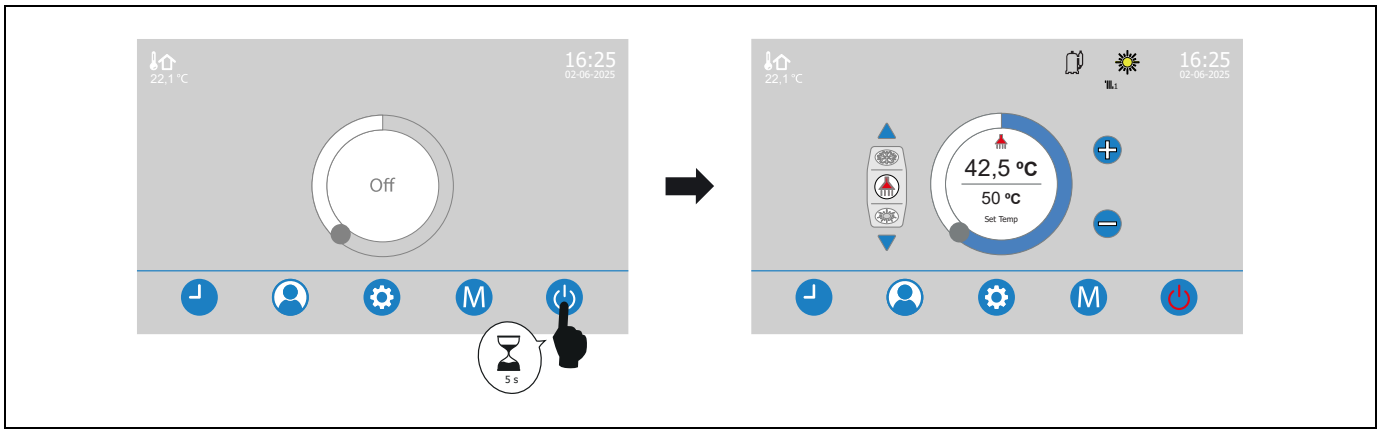

To switch off the heat pump, press the Off button (**11**) hold it down for 5 seconds. The heat pump will run through its switch-off sequence.

4 OPERATION

4.1 Selecting manual operating modes

Depending on the configuration of your installation, the **DUAL CLIMA HT PRO** heat pump can manage up to 5 operating modes manually. To select these operating modes, press the Operating modes touch button (**10**) on the start screen. The following modes will appear on the display:

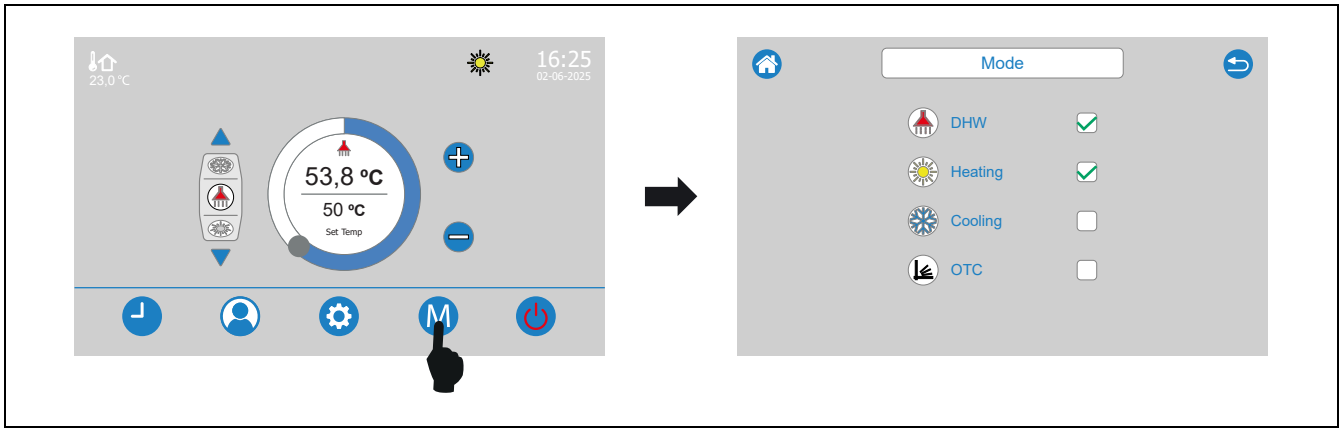

The selectable operating modes are as follows:

- Heating Mode.
- Cooling Mode.
- Domestic Hot Water (DHW) Mode.
- \+ Heating and DHW mode
- \+ Cooling and DHW mode

When the heat pump is configured and installed for "AUTO" mode functioning, the Heating and Cooling modes cannot be selected manually, as the heat pump will enable and disable them via a signal from the remote room thermostat connected to it (see *"Functioning in Heating/Cooling "AUTO" mode"*).

Depending on the configuration of your installation, some of the operating modes listed may not be selectable. Please read the following sections carefully as they describe the functioning of these modes in detail.

4.2 Cooling mode

This mode can only be selected if the heating/cooling installation is designed to function in Cooling mode (underfloor cooling, fan coils, etc.) and the heat pump is configured accordingly.

In this operating mode, the **DUAL CLIMA HT PRO** heat pump will cool the water in the heating/cooling installation and maintain it at the desired temperature. To do this, select the desired cooling setpoint temperature (see *"Temperature selection"*) and the room thermostat temperature (if the unit has a thermostat) (see *"Functioning in Heating/Cooling "AUTO" mode"*).

This mode will **only** affect the heating/cooling installation, and if the unit has DHW production it will be disabled.

4.3 Heating mode

In this operating mode, the **DUAL CLIMA HT PRO** heat pump will heat the water in the heating/cooling installation and maintain it at the desired temperature. To do this, select the desired heating setpoint temperature (see *"Temperature selection"*) and the room thermostat temperature (if the unit has a thermostat) (see *"Functioning in Heating/Cooling "AUTO" mode"*).

This mode will **only** affect the heating/cooling installation, and if the unit has DHW production it will be disabled.

4.4 DHW mode

This mode will only be selectable if the installation has a Domestic Hot Water storage tank connected and the heat pump is configured accordingly.

In this operating mode, the **DUAL CLIMA HT PRO** heat pump will heat the water in the domestic hot water storage tank to the desired temperature, to provide DHW to the home. To do this, select the desired DHW setpoint temperature (see *"Temperature Selection"*). When the desired temperature is reached the heat pump will stop and will remain on standby until it receives a DHW request.

This mode will **only** affect the DHW storage tank installation, and the heating and/or cooling function of the heating/cooling installation will be disabled.

4.5 Cooling and DHW mode +

This mode will only be selectable only if the heating/air conditioning system is designed to operate in Cooling mode (underfloor cooling system, fan coils, etc.); the installation has a connected domestic hot water storage tank and the heat pump is configured accordingly.

This operating mode is the combination of the Cooling and DHW simultaneously. When a DHW request is activated, the heat pump will disable Cooling mode and enable Domestic Hot Water mode, giving priority to DHW production over the cooling function of the heating/air conditioning installation. Once the desired DHW temperature is reached, the heat pump will enable Cooling mode again.

4.6 Heating and DHW mode +

This mode will only be selectable if the installation has a Domestic Hot Water storage tank connected and the heat pump is configured accordingly.

This operating mode is a simultaneous combination of the Heating and DHW modes. When a DHW request is activated, the heat pump will disable Heating mode and enable Domestic Hot Water mode, giving priority to DHW production over the heating function of the heating/air conditioning installation. Once the desired DHW temperature is reached, the heat pump will enable Heating mode again.

4.7 Functioning in Heating/Cooling "AUTO" mode

In **"AUTO"** mode, the **DUAL CLIMA HT PRO** heat pump can enable Heating or Cooling mode "automatically". To enable this operating mode, the electronic control has 2 connections (one for enabling Heating mode and the other for enabling Cooling mode). A combination of **room thermostats** can be connected to enable the heat pump to activate one or more operating modes automatically and remotely from wherever these thermostats are installed inside the home. To correctly install this thermostat, carefully follow the instructions provided in the section *"Connecting Room Thermostats for "AUTO" mode"*.

After connecting the programmable room thermostat or room thermostat for heat and cold, the heat pump will activate the Heating or Cooling function automatically, depending on the thermostat settings and the indoor temperature in the home. The user must select the desired temperature, the operating mode (Heating or Cooling) and the periods of operation if it is a programmable thermostat (See the Thermostat Manual). The heat pump will start up and the operating mode selected on the thermostat will be activated (Heating or Cooling) until the desired temperature is reached. When the desired temperature is reached in the home, the heating or cooling mode will be deactivated and the heat pump will switch off. The electronic control unit screen will display the following screen, indicating that the heat pump has been shut down by the room thermostat (Stand By).

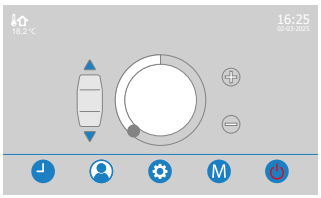

The installation of a room thermostat will optimise installation operation by adapting heating/cooling operation to the needs of the home and achieving a higher degree of comfort. In addition, if the thermostat can be used to program hours of operation (programmable thermostat), the service can be adapted to the scheduled use of the facility.

When the DHW production mode is selected in the heat pump control panel ( ), the electronic control unit will activate the Heating or Cooling modes in combination with DHW production as described in the sections titled *"Cooling mode and DHW service + "* and *"Heating mode and DHW service + "*, therefore, automatic selection of the operating mode will not affect DHW production

The table below shows the functioning of the **DUAL CLIMA HT PRO** heat pump in **"AUTO"**, mode, depending on the remote mode selection made on the Hot/Cold thermostat:

Thermostat Selection	DUAL CLIMA HT PRO	Control panel
Heating	Heating Mode: The heat pump enables Heating mode.	
	Combined Heating + DHW mode: The heat pump enables Heating mode, providing the desired setpoint temperature has already been reached in the DHW storage tank.	
Cooling	Cooling Mode: The heat pump enables Cooling mode.	
	Combined Cooling + DHW mode: The heat pump enables Cooling mode, providing the desired setpoint temperature has already been reached in the DHW storage tank	
OFF (Stand By)	Heating or Cooling Modes: When the desired temperature is reached in the home, or when the room thermostat is disabled (if it equipped with this function), the heating or cooling function will be disabled.	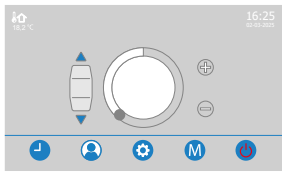
	Combined Heating or Cooling + DHW modes: When the desired temperature is reached in the home, or when the room thermostat is disabled (if it equipped with this function), the heating or cooling function will be disabled and DHW mode will remain enabled.	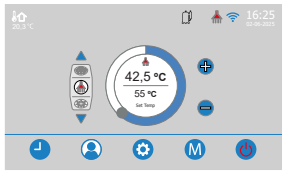

4.8 Functioning with room sensor

This operating mode cannot be enabled until a room temperature sensor is connected to the heat pump (See *"Connecting a room sensor or thermostat"*). To enable this function, set parameter **P150** of the "System Parameters" menu to **4** (see *"Settings Menu"*). Also, parameters **117** (in Heating mode) and **118** (in Cooling mode) can be used to set the difference in temperature needed to reactivate demand after reaching the desired temperature. The range of temperatures that can be selected is 0.2~5ºC. The default factory setting is 0.5ºC.

Operation with the room temperature sensor will optimise the Heating/Cooling installation by adapting the operation of the heat pump to the needs of the home and achieving a higher degree of comfort. The electronic control unit will adjust the temperature setpoints of the heat pump according to the room conditions registered by the room temperature sensor installed in the home. This will optimise energy savings and increase installation efficiency.

This feature applies to both operating modes of the heat pump, both Heating and Cooling. To initiate operation, select the corresponding operating mode, Heating or Cooling (see sections above), the temperature setpoint for the selected mode and the room temperature setpoint for the home (see *"Selecting temperatures"*).

Once room temperature sensor operation is enabled, a new column ( ) will be displayed in the time programming menu, allowing different room temperature setpoints to be adjusted for each programming period (see *"Time programming"*). If the room temperature setpoint is not set in a period, the manually selected setpoint shall be applied (see *"Temperature selection"*).

4.9 Functioning according to outdoor temperature conditions (OTC)

To enable this function, set parameter **P154** of the "System Parameters" menu to any value other than **OFF** (see *"Settings Menu"*). The Zone 1 temperature display screen ( ) of the control panel will show the acronym "**OTC**", replacing the Heating setpoint. After the desired value is selected, activate the function by selecting the "**OTC**" mode in the "Operating Modes" menu (M) (**10**) of the home screen.

When this operating mode is enabled, the Heating temperature of the heat pump or the buffer tank, if there is one, will be calculated according to the slope of the K curve selected in parameter **P154** and the outdoor temperature measured by the outdoor temperature sensor. If the installation is the proper size, the temperature of the heat pump calculated by this function will ensure a room temperature that corresponds to the programmed setpoint.

The slope of the K curve reflects the association between the outdoor temperature and the Heating temperature setpoint of the heat pump or buffer tank, if there is one. The attached chart shows the list of temperatures for each K curve value.

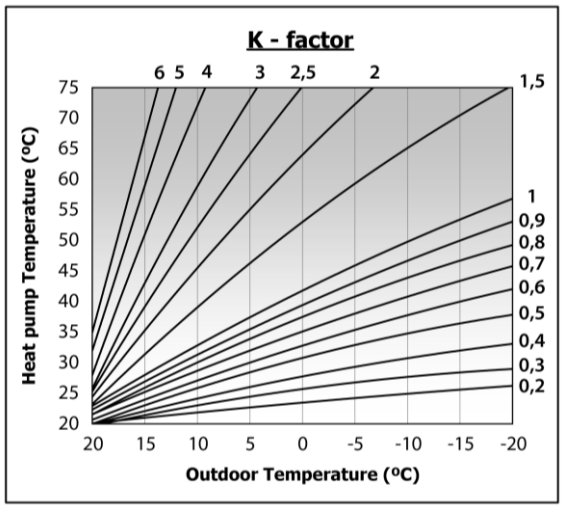

The ideal K curve will vary according to the type of heating circuit, the insulation conditions of the building and the location of the outdoor temperature sensor. As a general rule, a K curve of **1** or higher is recommended for high temperature heating circuits (e.g., circuit of "radiators"), whereas a K curve of **0,8** or lower is recommended for low temperature circuits (e.g., circuit of "underfloor heating"). In the latter type of circuit, it is not recommended to select a K curve that can generate temperatures over 55ºC, since this can damage the installation and the furniture in the home.

Although the outdoor heat pump unit is equipped with a sensor that measures the outdoor temperature where it is installed, to make the most of the OTC function, it is advisable to connect an OTC outdoor temperature sensor in an appropriate location, following the instructions given in the section titled *"Connecting an outdoor temperature sensor OTC"*.

The DOMUSA TEKNIK warranty does not cover damage caused by selecting an inappropriate K curve for operation.

NOTE: Inappropriate selection of the K curve may result in the heating installation not generating the desired conditions in the home, not heating enough in extremely cold weather or heating too much in warm weather conditions.

4.10 Functioning in "AUTO" mode with a room thermostat

The **DUAL CLIMA HT PRO** heat pump includes two connections prepared for the installation of a room chronothermostat or room thermostat (see "*Connecting Room Thermostats for "AUTO" mode*"), which will allow you to control the heat pump's operation depending on the temperature inside your home. One of the connections is designed for heating mode, and the other for cooling mode. **DOMUSA TEKNIK** offers as an option a wide range of these devices in its product catalogue.

Operation with a room thermostat will not affect the DHW service (if applicable), which will remain enabled regardless of the status of the thermostat.

Installing a room thermostat will optimize the system's performance, adapting the heating and/or cooling to the home's needs and achieving improved comfort. Furthermore, if the thermostat allows for programming operating hours (chronothermostat), the service can be tailored to the system's operating schedule.

Operation in "AUTO" mode with 2 room thermostats

If two room thermostats are installed simultaneously, the operating mode is selected (one for Heating and the other for Cooling) (see *"Connecting the Room Thermostats for "AUTO" mode"*), by selecting the desired temperatures and operating periods if the thermostats are programmable (see the Manual supplied with the Thermostat). The heat pump will start up and the operating mode corresponding to the thermostat (Heating or Cooling) will be activated until the desired temperature is reached. When the desired temperature is reached in the home, the heating or cooling function of the heating/cooling installation will be disabled, turning off the operation of the heat pump. The information shown below will appear on the electronic control panel to indicate that the heat pump has been switched off by the room thermostat (standby).

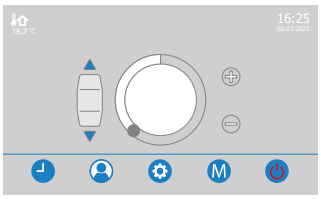

IMPORTANT: Ensure the correct temperatures are selected on each one to prevent crossover, with both thermostats being enabled at the same time.

Operation in "AUTO" mode with heat/cold toggle thermostat (2 wires)

If a **heat/cold toggle room thermostat** (2 wires) is installed, to select the operating mode automatically, the same operating mode (Heating or Cooling) will need to be selected on the heat pump as the mode it is to work in. Once the thermostat is installed in the home, select the desired temperature and operating times, if it is a chronothermostat (see the Thermostat Manual). The heat pump will switch on and activate the selected operating mode (Heating or Cooling) until the temperature set on the room thermostat is reached. When the desired temperature is reached in the home, the heating or cooling function of the heating/air conditioning installation will be disabled, turning off the operation of the heat pump. The information shown below will appear on the electronic control panel to indicate that the heat pump has been switched off by the room thermostat (standby).

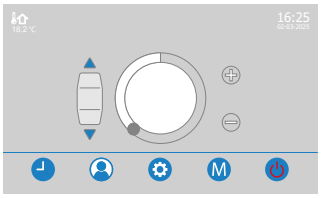

IMPORTANT: Ensure the operating mode is correctly selected on the heat pump, so that both of them work in the same mode.

4.11 Silent Mode

To reduce the sound impact of the heat pump during particularly sensitive periods (nighttime), the **DUAL CLIMA HT PRO** heat pump allows the activation of Silent Mode.

During Silent Mode operation, the heat pump reduces fan and compressor speeds in order to lower its noise level.

Two selectable levels are available depending on the required degree of noise reduction: Silent Mode 1 and Silent Mode 2.

IMPORTANT: Incorrect selection and configuration of Silent Mode may prevent the heating system from delivering the desired comfort level in the home.

To activate and configure this operating mode, adjust the parameters available within the User Menu or parameters **P15**, **P16**, and **P17** in the System Parameters (see Configuration Menu).

4.12 Anti-legionella function

This function prevents the proliferation of Legionella bacteria in the domestic hot water accumulated in the tank, so it will only be available if the installation has a connected Domestic Hot Water storage tank and the heat pump is configured accordingly.

To enable this function, adjust parameter **P14** in the System Parameters (see *Settings Menu*). The heat pump has the anti-legionella function disabled by default. To enable it, set parameter **P14** to **0**.

The function will regularly increase the temperature of the domestic hot water in the tank to 50~70 ºC. The desired temperature and frequency can be selected for this purpose (see *"Temperature selection"*). This function will be activated regardless of the operating modes that enabled at the time of start-up, even when the heat pump is in standby mode.

Also, providing the function is enabled (**P14**=**0**), this function can be activated manually at any time using the parameter **P14** in the System Parameters (see *Settings Menu*). Setting parameter **P14** to **1** will enable the anti-legionella function once. When the function is activated, it cannot be stopped and you must wait until the cycle is complete for the appliance to resume its normal functioning.

4.13 SG Ready function

The **DUAL CLIMA HT PRO** heat pump includes the SG Ready (Smart Grid) function. This function allows the power company to communicate with the heat pump and adapt it optimally to the mains network demand via a smart control. Its consumption can therefore be adapted to the grid requirements, helping accumulate energy at the most profitable times and avoiding consumption when the grid demand is highest.

By default, the heat pump is supplied with the SG Ready function disabled. To activate it, set parameter **P201** to 1. Also, to accumulate energy at the times determined by the power company and to adapt your consumption to grid demand, new heating, cooling and/or domestic hot water setpoints will need to be selected for each operating mode.

NOTE: To ensure energy storage with the SG Ready function, it is necessary to have a DHW storage tank and buffer tank for heating and/or cooling installed.

This function will accumulate energy and reach the newly defined setpoints using both the compressor and the back-up energy sources for DHW (E1) and heating (E2). To set the working mode of the heat pump to SG Ready, adjust parameter **P208** of the System Parameters (see *Settings Menu*). If only the heat pump is to be worked with, bear in mind that the backup energy sources for DHW (E1) and heating (E2) will not work to reach the newly defined setpoints, regardless of the auxiliary or backup energy sources (**P81**) selected.

The **DUAL CLIMA HT PRO** heat pump incorporates two terminal strip inputs (see *"Connection Diagram"*). In combination with the different options, these inputs define 4 SG Ready operating modes:

	MODE OFF	**MODE STANDARD**	**RECOMMENDED START-UP MODE**	**MODE ON**
SG1	ON (Closed)	OFF (Open)	OFF (Open)	ON (Closed)
SG2	OFF (Open)	OFF (Open)	ON (Closed)	ON (Closed)
CONNECTION DIAGRAM	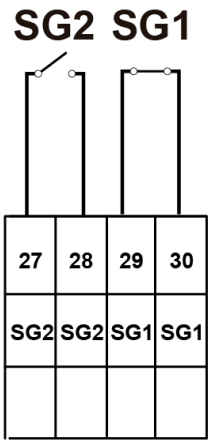	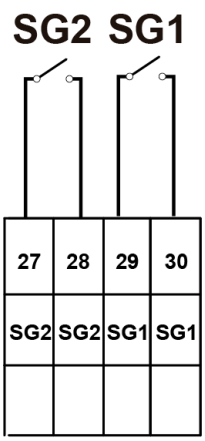	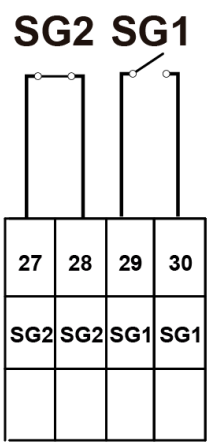	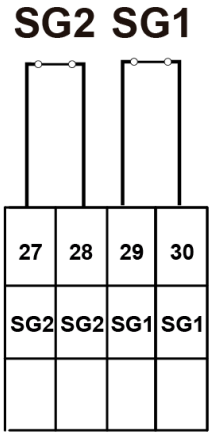
REMOTE CONTROL	SG OFF	-	SG ON	SG ON

Off mode SG OFF

In off mode, when there is an excessive power consumption demand in the grid, the power company instructs the heat pump not to switch on at all (standby mode). The heat pump will not switch on in heating, cooling and/or domestic hot water mode. None of the safety functions (anti-freeze, defrost, etc.) will be affected in this operating mode. Off mode will last for a **maximum of 2 hours**.

While off mode is operational, the icon SG Function Ready in off mode will be displayed on the start screen. SG OFF.

Standard mode

In standard mode, the power company cannot alter the functioning of the heat pump. The heat pump will operate normally and no icon will be displayed on the start screen.

Recommended start-up mode SG ON

In recommended start-up mode, the power company recommends switching on the heat pump in order to adapt consumption to the mains demand. This will require the selection of new heating, cooling and/or domestic hot water setpoints depending on the installation. The new setpoints must be selected by technically qualified personnel. To do this, parameters **P202, P204** and **P206** of the System Parameters must be adjusted (see *Settings Menu*).

While recommended start-up mode is enabled, the function will increase the temperature in the DHW tank and/or buffer tank installed to the temperature selected.

While recommended start-up mode is enabled, the icon SG Function Ready in on mode will be displayed on the start screen. SG ON.

NOTE: Incorrect setting of the parameters may result in the heating system not providing the desired comfort in the house.

Start-up mode SG ON

In start-up mode, the power company forces heat pump switch-on in order to adapt the consumption to the grid demand. This will require the selection of new heating, cooling and/or domestic hot water setpoints depending on the installation. The new setpoints must be selected by technically qualified personnel. To do this, parameters **P203, P205** and **P207** of the System Parameters must be adjusted (see *Settings Menu*).

As long as the start-up recommendation mode is enabled, the function will raise the temperature of the installed DHW storage tank and/or buffer tank to the selected temperature.

While On mode is enabled, the icon SG Function Ready in on mode will be displayed on the start screen. SG ON.

NOTE: Incorrect setting of the parameters may result in the heating system not providing the desired comfort in the house.

5 TEMPERATURE SELECTION

The desired temperature setpoint of each operating mode will be adjusted on the temperature display screen of each mode. The screen is accessed by using the navigating arrows (**3**) to select the desired screen and then using the control knob (**1**) and the touch button "+" (**13**) or "-" (**12**) to select the desired temperature. The selected temperature will be displayed in the centre of the screen.

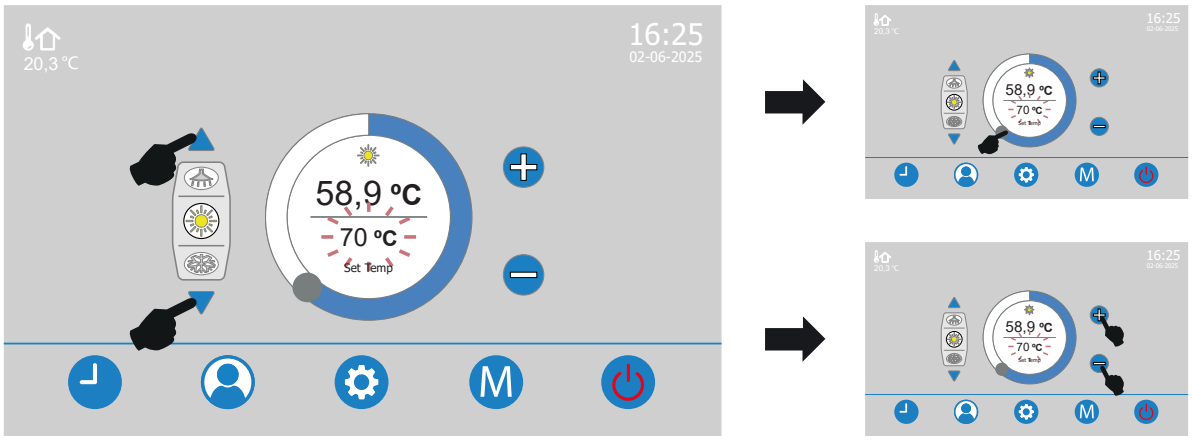

5.1 Setting the Cooling Mode setpoint temperature

To adjust the temperature setpoint for the Cooling mode, use the navigating arrows (**3**) to select the Cooling temperature screen. The selectable range of values for Cooling operating mode is 7~25 ºC. The pre-set default value is 12ºC.

To correctly set suitable values for this operating mode, follow the recommendations given by the installer or the **DOMUSA TEKNIK** Official Technical Service. Depending on the type of installation, the location (climatic zone) and the relative humidity of the home, excessively low temperatures of the Cooling mode setpoint may create "undesired" condensation in the heating/cooling system, causing deterioration and damage in the home.

IMPORTANT: DOMUSA TEKNIK will not be held liable for any damages and/or breakdowns in either the installation or the home caused by inadequate selection of the Cooling Mode setpoint temperature.

5.2 Setting the Heating Mode setpoint temperature

To adjust the temperature setpoint for the Heating mode, use the navigating arrows (**3**) to select the Heating temperature screen. The selectable range of values for Heating operating mode is 25~75 ºC. The pre-set default value is 45ºC.

To correctly set suitable values for this operating mode, follow the recommendations given by the installer or the **DOMUSA TEKNIK** Official Technical Service. Depending on the type of installation (radiating floor,…), excessively high temperatures of the Heating mode setpoint may cause deterioration and damage both in the installation or in the house.

If the operating mode is activated according to outdoor weather conditions, the Zone 1 temperature display screen will show "**OTC**" and the heating setpoint temperature will be adjusted automatically by the electronic control panel, depending on the temperature measured outside the home and the K curve pre-adjusted by the installer or the Official Technical Service (see *"Functioning according to outdoor temperature conditions OTC"*).

NOTE: If automatic operation according to outdoor temperature conditions ("OTC") is selected, inappropriate selection of the K curve may result in the heating installation not generating the desired conditions in the home, not heating enough in extremely cold weather or heating too much in warm weather conditions.

IMPORTANT: DOMUSA TEKNIK will not be held liable for any damages and/or breakdowns in either the installation or the home caused by inadequate selection of the Heating Mode setpoint temperature.

5.3 Setting the DHW Mode setpoint temperature

To adjust the temperature setpoint for the DHW mode, use the navigating arrows (**3**) to select the Cooling temperature . The selectable range of values for DHW operating mode is 25~70 ºC. The pre-set default value is 45ºC.

If the desired temperature in the tank is higher than the value selected for parameter **P35** of the System Parameters (see "*Settings Menu*"), an auxiliary heat source must be installed on the tank as a backup (electric heating element, backup boiler, etc.). The **DUAL CLIMA HT PRO** heat pump will heat up the water in the tank to the value selected for parameter **P35**. After this, it will activate the auxiliary heat source **E1** to reach the highest desired temperature. The selectable range of values for **P35** parameter is 0~70 ºC. The pre-set default value is 70ºC.

5.4 Adjust the Zone 1 room temperature setpoint

If room sensor operation is enabled in Zone 1, adjust the room temperature setpoint for that zone using the navigating arrows (**3**) to select the room temperature screen for Zone 1 . The range of temperatures that can be selected is 0: Off, 10.0~35.5ºC. The default factory setting is Off.

5.5 Adjusting the Anti-Legionella function settings

To set and activate the anti-legionella function, you must adjust parameters **P10**, **P11**, **P12 P13** and **P14** of the System Parameters (see *Settings Menu*).

Activating the Anti-legionella function

To activate the anti-legionella function, you must adjust parameter **P14** of the System Parameters (see Settings Menu). The selectable range of values is 0~2.

- P14=0; automatic operation of anti-legionella function.
- P14=1; manual operation of anti-legionella function. The anti-legionella function will be activated once when manual mode is selected. The function will not be run again until its next manual enablement.
- P14=2; anti-legionella function switch-off.

Anti-Legionella Temperature

To select the anti-legionella setpoint temperature, you must adjust parameter **P13** of the System Parameters (see *Settings Menu*). The selectable range of values for the anti-legionella function is 50~70 ºC. The pre-set default value is 70ºC. This setting can be increased or decreased by selecting the desired value on the drop-down sub-menu. When you have selected the desired value, press the **Enter** button to save the setting.

Frequency

To adjust the activation frequency of the anti-legionella function (in days), you must adjust parameter **P10** of the System Parameters (see *Settings Menu*). The selectable range of values is 1~99 days. The pre-set default value is 7 days. This setting can be increased or decreased by entering the desired value on the drop-down sub-menu.

Start Time

To adjust the time at which the anti-legionella function is activated, you must adjust parameter **P11** of the System Parameters (see *Settings Menu*). The selectable range of values is 0-23 hours. The pre-set default value is 23 hours (23.00h). This setting can be increased or decreased by entering the desired value on the drop-down sub-menu. When you have selected the desired value, press the **Enter** button to save the setting.

Maintenance minutes

To adjust the length of time the function will remain active once the selected temperature has been reached, you must adjust parameter **P12** of the System Parameters (see *Settings Menu*). The selectable range of values is 5~99 minutes. The pre-set default value is 10. This setting can be increased or decreased by entering the desired value on the drop-down sub-menu. When you have selected the desired value, press the **Enter** button to save the setting.

5.6 Setting the SG Ready function setpoints

For configuring and operating the SG Ready function, in "Recommended Start-up" and "On" modes, new for heating, cooling and/or domestic hot water setpoints need to be selected for each operating mode. See "*SG Ready function*".

To select new heating setpoints, parameters **P202,** for Recommended start-up mode, and **P203,** for On mode, must be adjusted. The selectable range of values is 0~75 ºC. The preset default value for **P202 and P203** is **OFF** and this value can be activated by selecting the desired value on the sub-menu displayed. Once the desired value has been selected, press the **Enter** button to save the setting. If the **OFF** default value is kept, no new temperature setpoints will be applied for the operating modes.

To select new cooling setpoints, parameters **P204,** for Recommended start-up mode, and **P205,** for Start-up mode, must be selected. The selectable range of values is 10~30 ºC. The pre-set default value for **P204 and P205** is **OFF**. This setting can be activated by selecting the desired value on the drop-down sub-menu. Once the desired value has been selected, press the **Enter** button to save the setting. If the **OFF** default value is kept, no new temperature setpoints will be applied for the operating modes.

To select new domestic hot water setpoints, parameters **P206,** for Recommended start-up mode, and **P207,** for On mode, must be adjusted. The selectable range of values is 0~70 ºC. The pre-set default value for **P206 and P207** is **OFF**. This setting can be activated by selecting the desired value on the drop-down sub-menu. Once the desired value has been selected, press the **Enter** button to save the setting. If the **OFF** default value is kept, no new temperature setpoints will be applied for the operating modes.

NOTE: Incorrectly setting of the parameters could mean the heating installation may not generate the desired thermal comfort in the home.

6 INSTALLATION INSTRUCTIONS

6.1 Accessories Supplied

The following accessories are supplied inside the **DUAL CLIMA HT PRO** heat pump. Before installing the appliance, make sure none of these accessories are missing or damaged.



Documentation: You will find the documentation bag inside the appliance, on opening the front panel. It includes all the necessary manuals and documents for using and installing the heat pump.

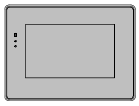

Control panel: You will find the control panel inside the appliance, on removing the electronic card cover. The control panel must be installed inside the home before connecting the power supply to the appliance.



Blow-off valve: This is supplied inside the appliance, fastened with a cable tie to one of the compressor feet. The valve must be fitted to the drain socket on the rear of the heat pump before filling the heating/air conditioning circuit with water (see "*Diagrams and measurements*").

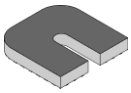

4x Anti-vibration supports: Four supports are supplied in a bag taped to the rear of the appliance, beside the hydraulic connections.

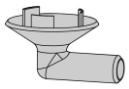

Condensate air vent: This is supplied inside the appliance, fastened with a cable tie to one of the compressor feet. This valve must be fitted to the condensate drain socket at the bottom of the rear side of the heat pump.

6.2 Location

The heat pump must be installed exclusively outside the home and, where possible, in an area free from obstructions. If a guard around the appliance is required, it must have spacious openings on all four sides, leaving the minimum required spaces for installation as indicated in the figure below. There must be no obstacles preventing air circulation through the evaporator and at the fan outlet.

Given that the DUAL CLIMA HT PRO heat pump uses R290 refrigerant gas, and considering that in the event of a leak, R290 refrigerant can accumulate at ground level creating a dangerous and explosive zone, it is mandatory to strictly respect the safety zones to prevent the gas from accumulating or coming into contact with ignition sources in case of a leak.

To avoid any risk and ensure air circulation through the evaporator and at the fan outlet, a danger zone has been delimited around the product, in which the following precautions must be taken into account:

- This area must not contain openings (doors, windows, ventilation grilles…), access to basements or sewer drains.
- The danger zone must not contain any source of ignition (switches, sockets, lamps, open flames, gas appliances…)
- The danger zone must not encroach on neighboring properties or public circulation areas.

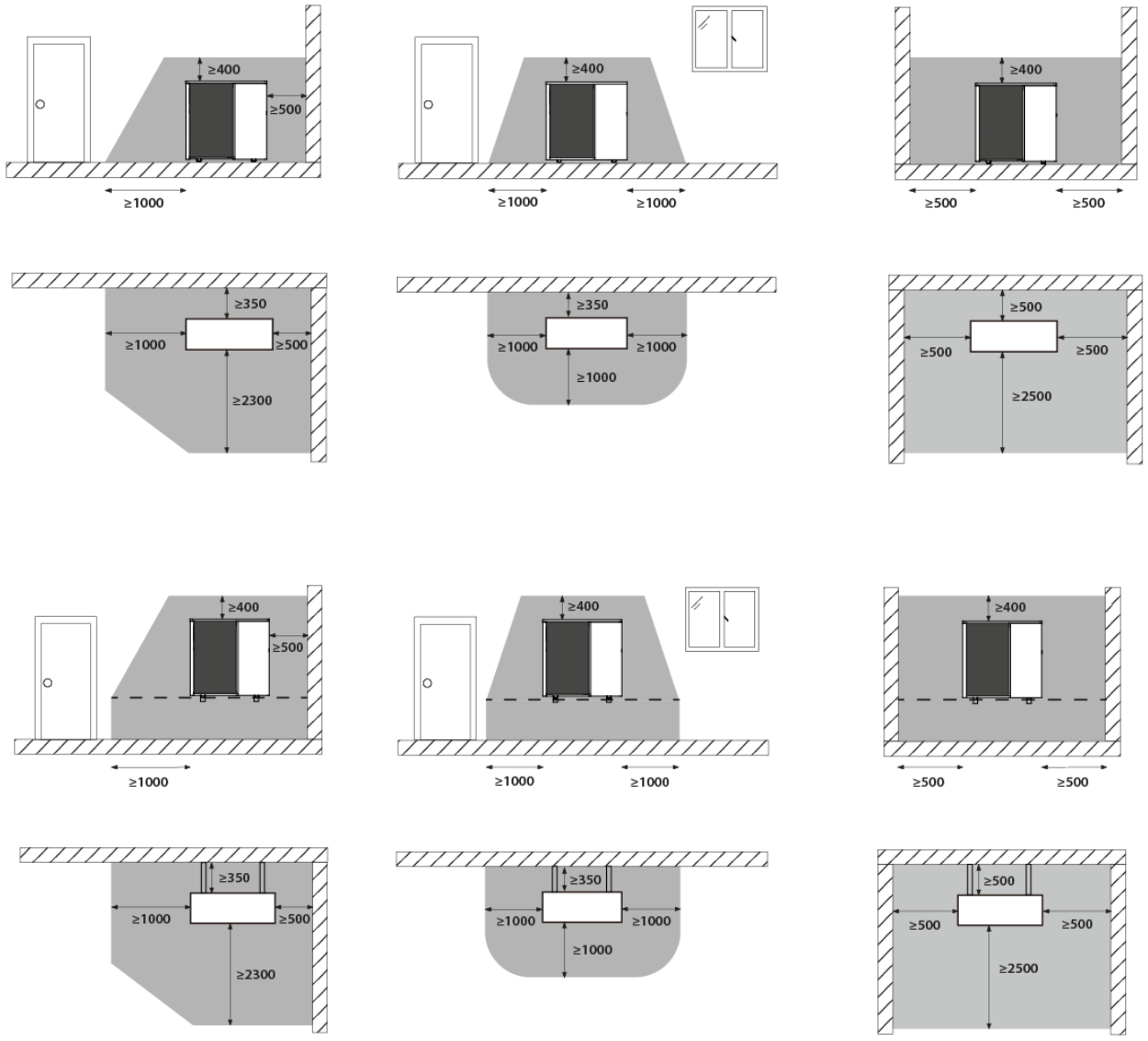

Delimited danger zone (mm).

If multiple units are installed in the same location, they must have large openings on all four sides, and the installation clearances shown in the following figure must be respected. No obstruction should impede airflow through the evaporator or at the fan outlet.

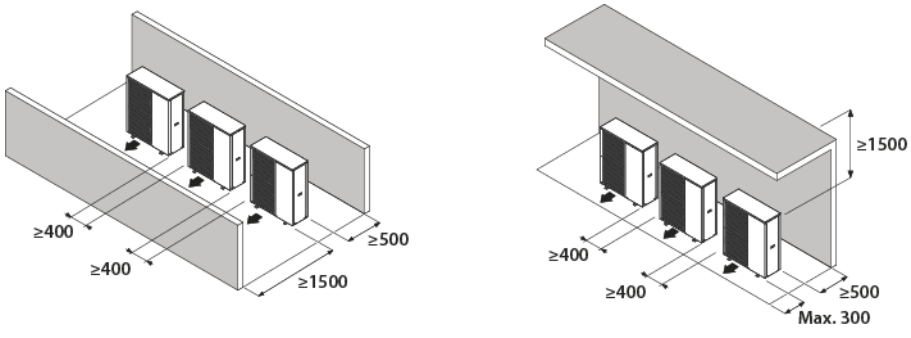

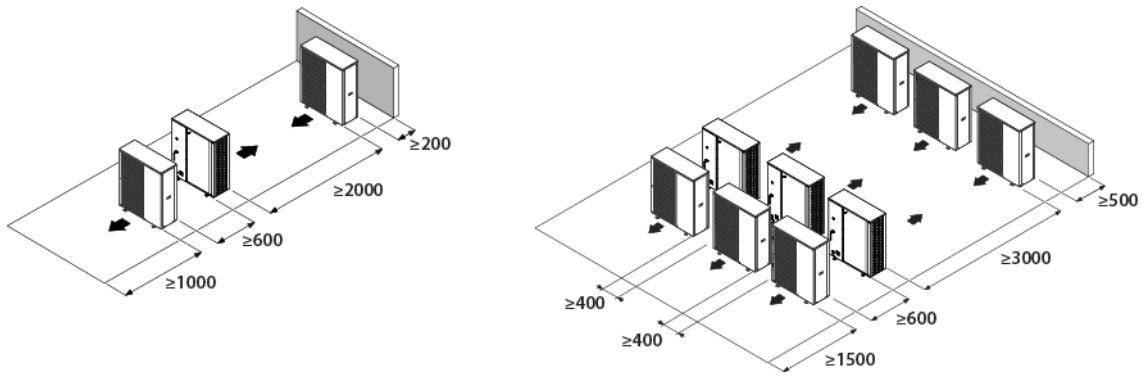

Minimum separations for installation of multiple units in the same location (mm).
Strictly necessary to ensure proper operation of the appliance, it may sometimes be essential to provide additional space for maintenance work.

The **DUAL CLIMA HT PRO** heat pump is an appliance specially designed for outdoor installation, but it should not be installed in locations where it could be exposed to major water spills or splashes (below a damaged gutter, near a gas outlet, etc.). Keep the appliance away from heat sources and flammable products.

In areas where heavy snowfall occurs, special care must be taken to protect the heat pump from any obstruction around it due to snow accumulation. The obstruction of the appliance's air inlet and/or outlet by snowdrifts could malfunctioning of the unit and possible breakdowns. The heat pump must be installed at least 100 millimetres above the maximum expected snow level. The roof must also be protected from snow accumulation by a roof overhang on the building or a similar structure.

A location with sunlight and protected from strong cold winds (mistral, tramontane, etc.) is preferable. If the heat pump is exposed to gusts of wind that could overturn it, it should be supported by suitable anchoring devices, as shown in the figure.

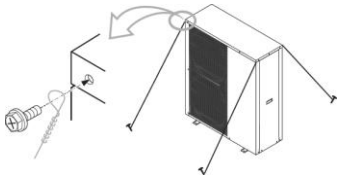

The device must be sufficiently accessible for subsequent installation and maintenance work. Ensure that there is sufficient room available to make the hydraulic and electrical connections into the home. The separation measurements shown in the figure above are those strictly necessary to ensure correct operation of the appliance. However, it will sometimes be essential to provide more space for maintenance work.

6.3 Fixing the Heat Pump

The heat pump should be firmly fixed to a base, preferably a concrete base. Fix it firmly using 4 sets of M12 bolts suitable for the base material, with nuts and washers (available on the market). Make sure that the protruding distance of the bolt inside the metallic support of the appliance (leg) does not exceed 10 mm.

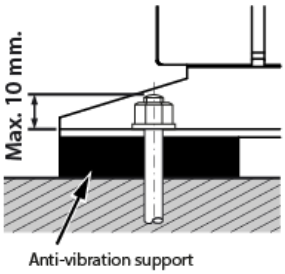

The receiving surface of the appliance must:

- Allow solid fixing (preferably concrete).
- Withstand a weight exceeding that of the appliance.
- Have a permeable area below the condensate drain hole (soil, gravel bed, sand, etc.).
- Not transmit any vibrations to the home. It is advisable to install the anti-vibration supports supplied with the heat pump.

If the appliance is installed on wall mounts it will be particularly important to insulate it against transmission of vibration and noise to the inside of the home, and anti-vibration supports better suited to the wall mount may need to be installed in addition to those supplied with the heat pump. However, installation on the ground is the most advisable.

Correctly level the heat pump to ensure the condensation water cannot run out of any area except the drain hole envisaged for this purpose.

6.4 Condensate Drainage

During normal functioning, large amounts of water may run off from the heat pump, and the **DUAL CLIMA HT PRO** heat pump is therefore equipped with two drain holes on the underside of the appliance. Ensure these holes are not obstructed on installation of the appliance.

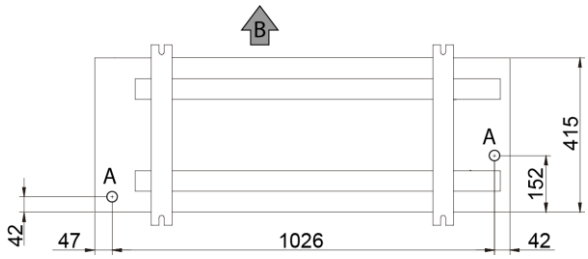

A: Condensate drain hole (view of underside of appliance).
B: Indication of front of appliance (discharge side).

The appliance should preferably be installed in a well-drained place. To do this, it is advisable to provide a bed of gravel, sand or similar materials below the drain hole. If the heat pump drain hole is covered by a mounting base or by the floor, raise the unit to leave a free space of at least 100 mm below it.

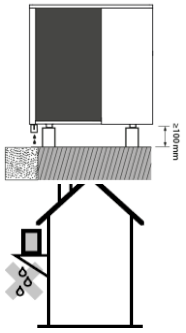

If it is installed on a terrace or façade, the condensate outlet must lead to a drain to avoid inconvenience and/or damage caused by dripping condensate water. If the installation is made in a region with long periods of sub-zero temperatures, check that there is no danger from frost.

6.5 Hydraulic installation

The hydraulic installation must be made by qualified personnel. Installation regulations must be followed, and the following recommendations must be taken into account:

- It is recommended to use piping appropriate for the installation to ensure the minimum flow rate in the hydraulic circuit.
- Before connecting the heat pump, a thorough internal cleaning of the system's pipes must be performed.
    - In new installations, it is mandatory to flush the entire system before final start-up to remove impurities (welding, oils, and sealants). Perform this flush without the circulation pump installed and then fill the circuit with clean mains water that meets the specified quality standards.
    - In existing systems, it is mandatory to drain and flush the current system to remove accumulated sludge and sediment. Flushing must be carried out in separate sections, ensuring sufficient flow to remove dirt, especially in low-circulation "blind spots." After flushing, fill the system with clean mains water that meets the specified quality standards.

NOTE: The use of additives, such as corrosion inhibitors or antifreeze, must always be carried out with prior approval from the supplier/manufacturer. It is essential to ensure the chemical compatibility of the product with the heat pump to avoid technical damage and loss of the equipment warranty.

- All the water circuit pipes **MUST** be insulated to prevent condensation from forming during cooling mode functioning and the subsequent reduction of cooling and heating capacity, and to prevent the external pipes from freezing in winter. The minimum insulation thickness of the pipes must be 19 mm (0.039 W/mK), preferably comprising closed cell insulation or a vapour barrier. In outdoor areas exposed to the sun, the insulation must be protected from the effects of its degradation.
- For the correct operation of the heat pump, you must ensure that the pipes do not exceed maximum lengths for each model. If these lengths are exceeded, the heat pump may have operating problems and generate various alarms and lockouts. Depending on the **DUAL CLIMA HT PRO** model and the type of pipe installed, these values will be:

	Ø	6HT	9HT	12HT 12HTT	16HT 16HTT	19HT 19HTT	22HTT	Lenth to be substracted for each 90º elbow
Copper pipe	18	40m	13m	5m				1m
	22		40m	16m	11m			1,2m
	28			60m	40m	8m		1,6m
	35					26m	6m	2m
	42					66m	16m	2,4m
	54						58m	3m
Plypropylen pipe	20	19m	7m					0,7m
	25	58m	19m	8m				0,9m
	32		70m	28m	18m			1,2m
	40				56m	11m		1,5m
	50					33m	8m	1,8m
	63						26m	2,3m
Multilayer pipe	20	32m	11m	4m				1,7m
	25	98m	34m	14m	9m			2,1m
	32			50m	33m			2,7m
	40					24m	6m	3,6m
	50					62m	15m	4,3m
	63						45m	5,1m

These lengths correspond to the total length of the heat pump piping, considering both the going and the return to the installation.

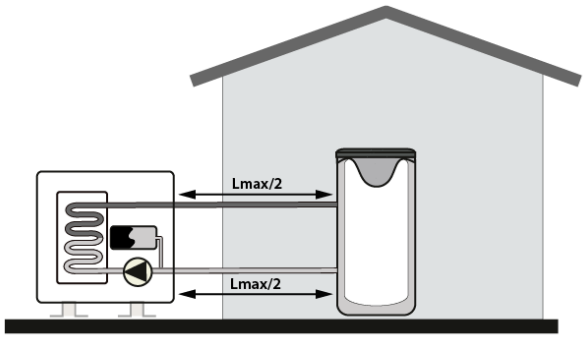

Lmax= Maximum length of installation pipe indicated.

IMPORTANT: In addition, it must be taken into account that any element added to the installation, such as filters, 3-way valves... will reduce this maximum available distance due to the pressure loss they generate in the installation.

- We recommend inserting cut-off valves between the installation piping and the heat pump to simplify maintenance tasks.
- Leave a free space around the heat pump for carrying out any maintenance and repair operations (see *"Location"*).
- Air vents and suitable devices for correctly bleeding the air from the circuit during the water filling stage should be fitted.
- Install all the necessary safety elements in the installation (expansion tank, safety valve, etc.) to comply with the required installation standards.
- A **water filter** must be installed in the heat pump water circuit to prevent obstruction or narrowing of the pipes due to dirt in the installation. The filter **MUST** be installed before filling the installation with water, on the appliance's return line, to prevent dirty water from entering the heat exchanger (capacitor). The type of filter installed must be adapted to the particular characteristics of each installation (type and material of the water pipes, type of water used, water volume of the installation, etc.). The water filter must be checked at least once a year and cleaned if necessary, although in new installations it is recommended to check it a few months after start-up.
- For correct functioning of the heat pump, a minimum volume of water in the installation and a minimum flow in the appliance's hydraulic circuit must be ensured. If the minimum flow in the heat pump is not reached it could have operating problems and trigger different alarms and stoppages. These values are as follows, depending on the **DUAL CLIMA HT PRO** model installed:

DUAL CLIMA	6HT	9HT	12HT/HTT	16HT/HTT	19HT/HTT	22HTT
Minimum volume (l)	34	40	48	60	80	80
Minimum flow rate (l/min)	12	15	16	20	24	26

- If the water volume in the installation is lower than this value, install a buffer tank in the heating/air conditioning circuit. To prevent condensation from forming and premature deterioration of the buffer tank, make sure all the hydraulic sockets and connections are correctly insulated, particularly when it is to be used in Cooling mode.
- In multi-zone installations managed by thermostatic shut-off valves or similar, a system for maintaining the aforementioned minimum flows even when all the zones are closed must be provided (bypass valve, etc.).

6.6 Heating Water Specifications

Before filling the primary circuit, it is mandatory to verify the suitability of the water. It must be free of suspended particles or contaminants (welding residue, rust scale, sludge, or scale).

It is essential that the properties of the fill water conform to the technical parameters detailed in the following table to guarantee the service life of the heat pump:

Specification	Value
Hydrogen potential (pH)	7,5-9
Conductivity at 20 °C	< 500 µS/cm
Chlorides	Less than 50 mg/l
Total hardness	20 ºfH
	11,2 ºdH
	2,0 mmol/l
Sand	<10 mg/l, 0.1 to 0.7 mm maximum diameter
Ferrite hydroxide Fe_2O_4 (black)	Dosage <7.5 mg/l, 50% by mass, with a diameter <10 µm
Iron oxide Fe_2O_3 (red)	Dosage <7.5 mg/l, diameter <1 µm

6.6.1 Filling the installation

The hydraulic installation must include a fill valve, air vents and the necessary hydraulic components for correctly filling it.

To fill the heat pump, open the fill valve until the manometer on the rear of the appliance shows a pressure of 1 - 1.5 bars. The heat pump has an automatic air vent (A) incorporated to the upper part of the flow pipe of the heat exchanger (capacitor), which must be opened during the filling process. The air should also be bled from the rest of the installation using the air vent valves provided. The installation must be filled slowly to facilitate air evacuation from the water circuit. Close the fill valve after filling. To comfortably access the heat pump air vent, open side and top panels of the heat pump.

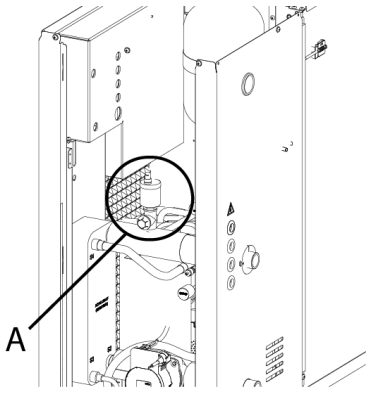

IMPORTANT: Switching on the heat pump with no water inside could result in serious damage.

6.6.2 Draining the heat pump

A blow-off valve is supplied with the **DUAL CLIMA HT PRO** heat pump, which must be fitted to the drain socket (B) provided in the lower part of the rear of the appliance. This valve is opened to drain the water from heat pump. To do this, connect a flexible tube (C) to the valve and run it to a drain. To ensure the heat pump is completely drained we recommend opening the automatic (A) inside the heat pump, so that air enters the circuit. After draining the boiler, close the valve again and remove the flexible tube.

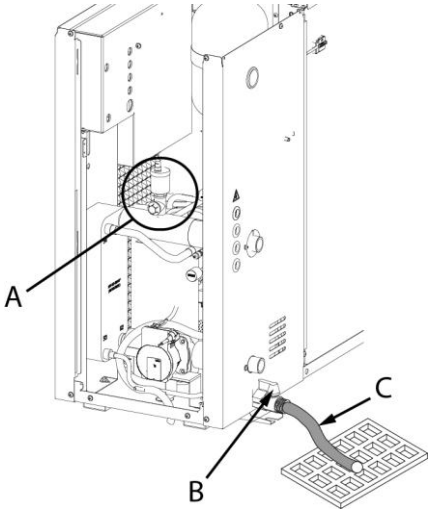

6.6.3 Installing a degasifier

The **DUAL CLIMA HT PRO** heat pump contains R290 refrigerant gas. In case of leakage, this gas can be highly flammable and safety precautions must therefore be taken. Therefore, it will be advisable to install some additional security system to prevent gas from entering the installation in the event of a leak. **DOMUSA TEKNIK will not be liable for any damages caused by failing to have a safety system in place for refrigerant leakage.**

DOMUSA TEKNIK advises installing a degasifier in the heat pump water circuit. If leakage occurred in the plate heat exchanger, the gas in the refrigerant circuit would be removed by the degasifier, avoiding gas accumulation in the water circuit. This degasifier must be installed in the Heating/Air Conditioning flow circuit (**IC**) (See *Diagrams and Measurements*). For further details, please carefully read the instructions supplied with the kit.

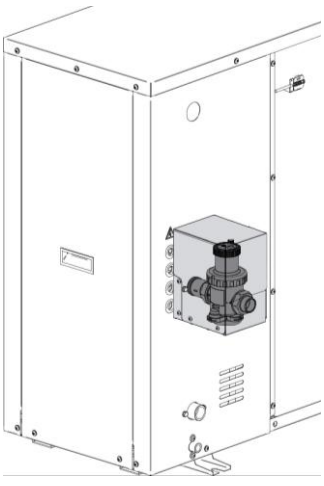

6.6.4 Installing a DHW tank

The **DUAL CLIMA HT PRO** heat pump may (optionally) be installed together with a tank for Domestic Hot Water production. Among its aerothermics accessories, **DOMUSA TEKNIK** offers a full range of hot water tanks specially designed for use in combination with **DUAL CLIMA HT PRO** (the **Sanit HE**, **BT-Trio** and **BT-Duo HE** ranges). The hydraulic installation of the hot water tank must be carried out by qualified personnel, in accordance with the installation legislation and the attached tank instructions.

To combine a DHW tank with the heat pump, insert the DHW temperature sensor supplied with the heat pump inside the appliance into the hot water tank bulb-holder. Also, a 3-way deflector valve (**G1**) must be installed between the external appliance and the DHW + Heating/Air Conditioning installation, so that the electronic control can divert the water in the installation to either DHW production or the Heating/Air Conditioning installation, depending on whether there is DHW demand.

Dc: DUAL CLIMA HT PRO heat pump.

Ac: Sanit HE hot water tank.

Sa: DHW tank sensor.

G1: 3-way diverter valve.

E1: Backup DHW element.

Ic: Heating/Air Conditioning installation.

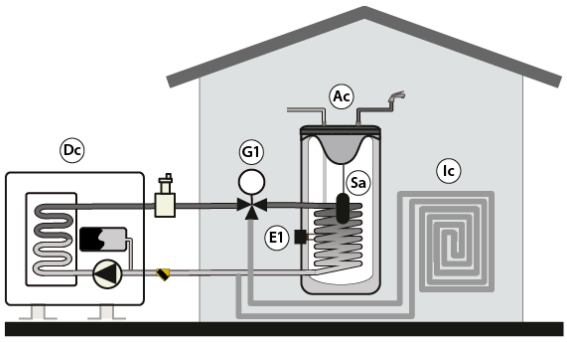

A backup element may also optionally be installed (**E1**).

Likewise, as an alternative to the backup heating element, a conventional energy source (such as a gas or oil-fired boiler) can optionally be connected to the **DUAL CLIMA HT PRO** heat pump to back up DHW production, via the same electrical connection (**E1**). The DHW tank must therefore be equipped with an auxiliary pipe and/or an intermediate heat exchange system allowing hydraulic connection of this backup energy source. Among its aerothermics accessories, **DOMUSA TEKNIK** offers the range of **Sanit HE DS**, hot water tanks, which include an auxiliary pipe on their upper part and are specially designed for use in combination with **DUAL CLIMA**.

Dc: DUAL CLIMA HT PRO heat pump.

Ac: Sanit HE DS hot water tank.

Sa: DHW tank sensor.

G1: 3-way diverter valve.

E1: DOMUSA TEKNIK backup boiler.

Ic: Heating/Air Conditioning installation.

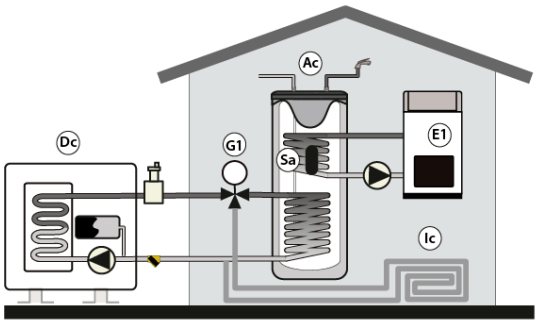

To correctly make the electrical installation for the DHW sensor, the 3-way valve (**G1**), and the backup element (**E1**), please read the *"Electrical Connections"* section of this manual carefully.

6.7 Electrical connections

The electrical installation of the **DUAL CLIMA HT PRO** heat pump and its electrical accessories must be made by qualified personnel, in accordance with the applicable installation legislation. The electrical installation must be connected so that the heat pump can be fully isolated and disconnected for the safe execution of any maintenance operations.

There are cable holes (D) on the rear of the appliance for threading the connector hoses to the inside. Cables exposed to external weather conditions should be protected by cable ducts or protective tubes or should be of a suitable category for use outdoors (H07RN-F hoses or higher). It is also advisable to keep the high-voltage cables (mains network cables, diverter valves, backup elements, circulation pumps, etc.) at a minimum distance of 25 mm from the low-voltage cables (control panel cable, temperature sensors, room temperature sensors, etc.), by running them through separate tubes.

Also, to insert the cables in the junction box, the cable ducts (E) incorporated to the rear of the box must be used.

IMPORTANT: Ensure that the junction box is totally sealed after making all the electrical connections.

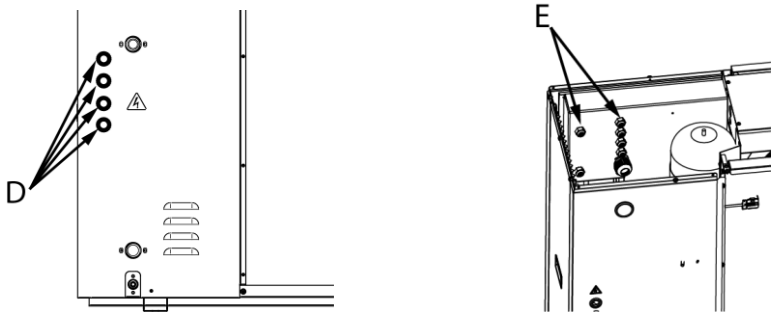

IMPORTANT: Before carrying out any work on the heat pump electrical installation, ensure it is disconnected from the mains.

6.7.1 Connection to the mains network

The **DUAL CLIMA HT PRO** heat pump is designed to be connected at 230 V~ 50 Hz o 400 V ~ 50 Hz (depending on the model) at the terminals shown in the figure (see *"Electrical Diagrams"*). The power supply terminals are located inside the appliance. To access them, open the front panel and access the front electronic cards. **Remember to earth the appliance.**

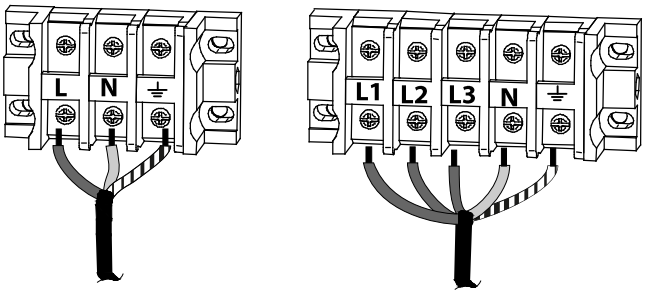

230 V~ 50 Hz 400 V 3N~ 50 Hz

The cable dimensions must comply with the applicable laws and regulations at all times. However, the table below shows some recommended characteristics and dimensions, for guidance:

		Maximum consumption (A)	Minimum cable diameter (mm^2)	Recommended fuse	Recommended hose
DUAL CLIMA 6HT PRO	230 V~ 50 Hz	12	2,5	16A	H05VV-U3G (in protective tube)
DUAL CLIMA 9HT PRO		14	2,5	16A	
DUAL CLIMA 12HT PRO		18	4	25A	
DUAL CLIMA 16HT PRO		27	6	32A	
DUAL CLIMA 19HT PRO		31	10	40A	
DUAL CLIMA 12HTT PRO	400 V 3N~ 50 Hz	6	2,5	16A	H05VV-U5G (in protective tube)
DUAL CLIMA 16HTT PRO		9	2,5	16A	
DUAL CLIMA 19HTT PRO		14	2,5	16A	
DUAL CLIMA 22HTT PRO		16	4	25A	

On selecting the cable type and diameter for the mains connection of the appliance **the power consumption deriving from the connection of optional heat pump accessories** (backup elements, circulation pumps, etc.) must be considered. (see *"Electrical Diagrams"*).

The electrical connection of the heat pump must be protected by an earth leakage circuit breaker (a high-speed switch of 30 mA (<0.1 s)).

IMPORTANT: Before carrying out any work on the heat pump electrical installation, ensure it is disconnected from the mains.

IMPORTANT: The cable diameter indicated in the table above is for guidance purposes only, as it depends on the type of cable and installation. In any case, ensure the local regulations are complied with.

6.7.2 Control panel connection

The control panel is supplied inside the heat pump and must be connected to the appliance before start-up. To do this, first install the control panel inside the home and then run the cable supplied to this location. Finally, connect the ends of the connectors incorporated to the cable and the control panel.

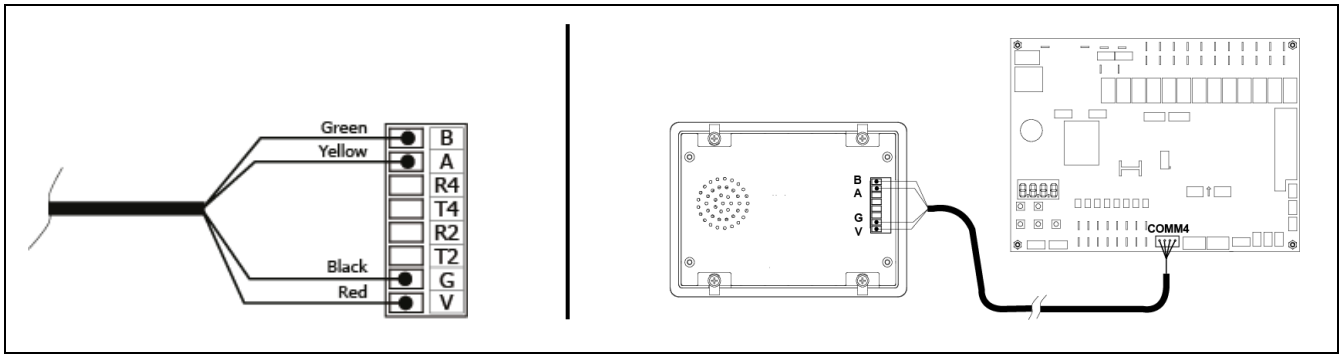

The cable supplied with the heat pump is 5 metres long. If necessary, it can be extended to a maximum distance of 30 metres (diameter between 0.25 and 1.25 mm^2).

IMPORTANT: Before carrying out any work on the heat pump electrical installation, ensure it is disconnected from the mains.

6.7.3 Connecting the DHW sensor

When installing an DHW tank in combination with the heat pump, a temperature sensor must be installed in the hot water tank. This sensor carries out the electronic control of the heat pump, managing the domestic hot water temperature by activating DHW mode when the water in the tank falls below the desired temperature.

A DHW sensor is supplied with the **DUAL CLIMA HT PRO** heat pump. This sensor is in the documentation bag inside the appliance. The sensor is connected to the electrical terminals **T13 (19 and 20)** on the heat pump input terminal strip. Before connecting it, firstly remove the resistor connected to this terminal strip when the heat pump is supplied. For its installation, run the sensor to the location of the DHW tank and insert it in the bulb-holder supplied for this purpose on the tank.

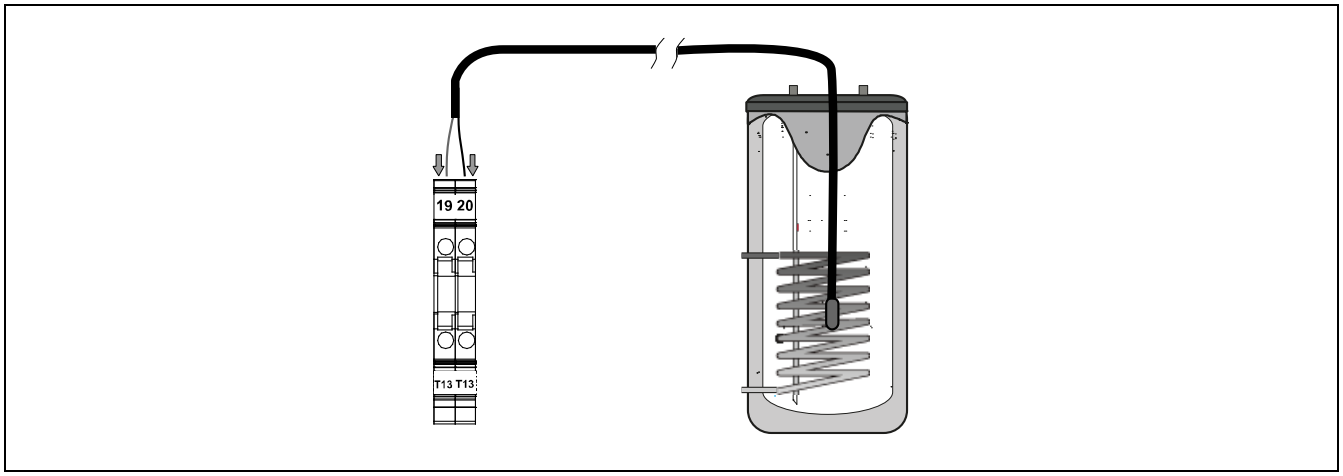

The sensor supplied with the heat pump is 5 meters long. If necessary, it can be extended to a maximum distance of 20 metres (diameter between 0.25 and 1.25 mm^2).

IMPORTANT: Before carrying out any work on the heat pump electrical installation, ensure it is disconnected from the mains.

6.7.4 Connecting a backup energy source for ACS (E1)

A backup heating element for DHW (optional) can be connected to the **DUAL CLIMA HT PRO** heat pump. The element must be connected to the socket provided for this purpose on the tank.

The element is connected between electrical terminals **E1L(7)** and **E1N (8)** (Neutral) on the heat pump component terminal strip.

IMPORTANT: The output relay E1 activating the element has a maximum consumption capacity of 1A, so to connect an element a relay must be run between the terminals of the terminal strip and the element.

DOMUSA TEKNIK offers the option of a kit consisting of an element with a relay included, specially designed for installation on the **DUAL CLIMA HT PRO** heat pump.

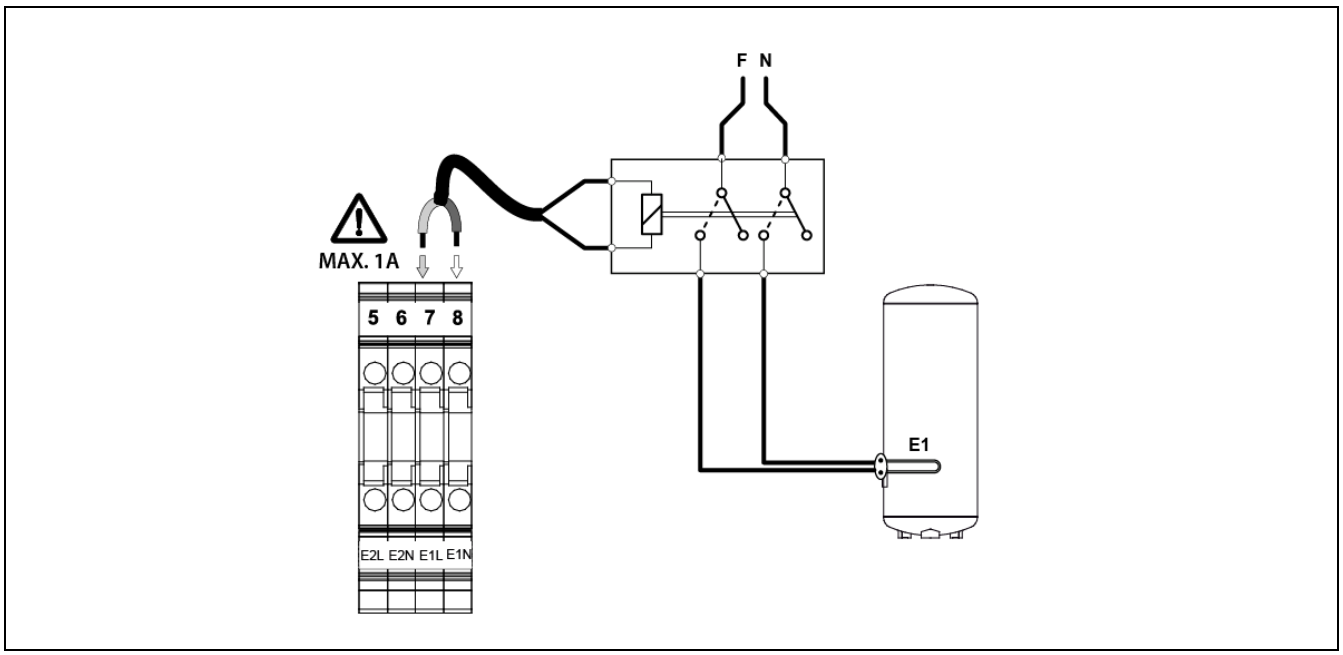

IMPORTANT: Before carrying out any work on the heat pump electrical installation, ensure it is disconnected from the mains.

As an alternative to the heating element, a conventional energy source such as an oil-fired, gas-fired, electrical or biomass boiler can be connected to the **DUAL CLIMA HT PRO** heat pump. The hot water tank must therefore be equipped with an auxiliary pipe and/or an intermediate heat exchange system allowing hydraulic connection of this backup energy source.

To make the electrical connection between the backup energy source and the heat pump, use the same terminals as previously described, i.e. **E1L(7)** and **E1N (8)** (Neutral). Depending on the characteristics of the installation and the type of backup boiler, the electrical connection may be made in at least two different ways:

Voltage connection

This type of connection takes advantage of relay output **E1** to directly activate the energy source (switch on the boiler, activate a backup circulation pump, etc.). To make this connection, connect the heat pump terminals **E1L(7)** and **E1N (8)** to the power supply input of the boiler and/or backup installation components you wish to activate. To make the connection correctly, carefully follow the diagram below:

IMPORTANT: The output relay E1 has a maximum consumption capacity of 1A, so a relay must be inserted on connecting a boiler and/or backup installation components.

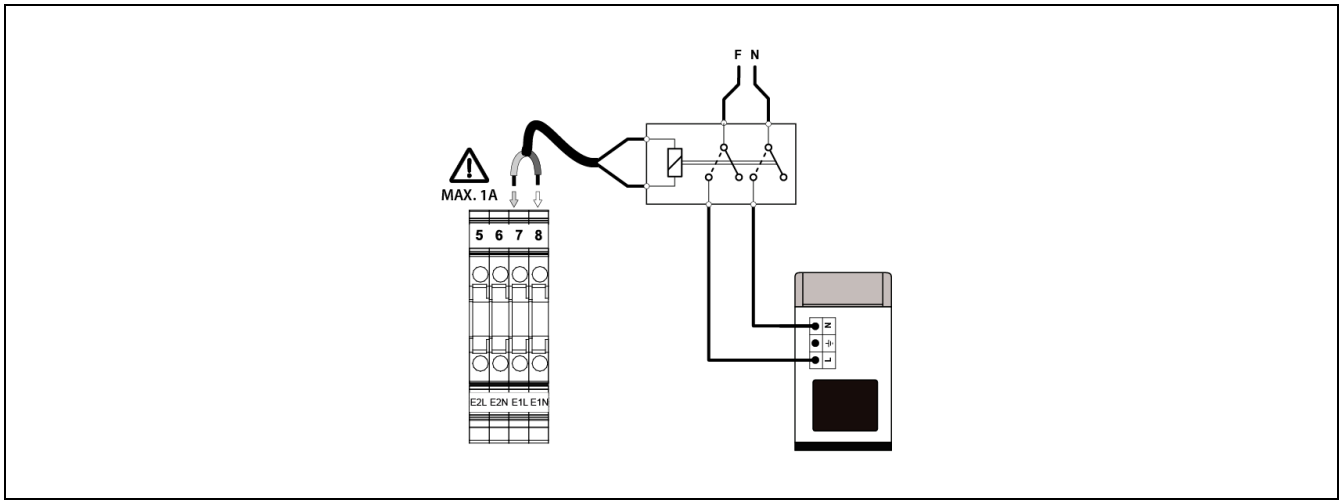

IMPORTANT: Before carrying out any work on the heat pump electrical installation, ensure it is disconnected from the mains.

Voltage-free connection

If the control input for activating and deactivating the backup energy source is voltage-free (a room thermostat input or telephone relay input, for example), you must insulate the energised output of the heat pump from the voltage-free input of the auxiliary energy source. To do this, run a relay between the heat pump output **E1** and the boiler control input. To make the connection correctly, carefully follow the diagram below:

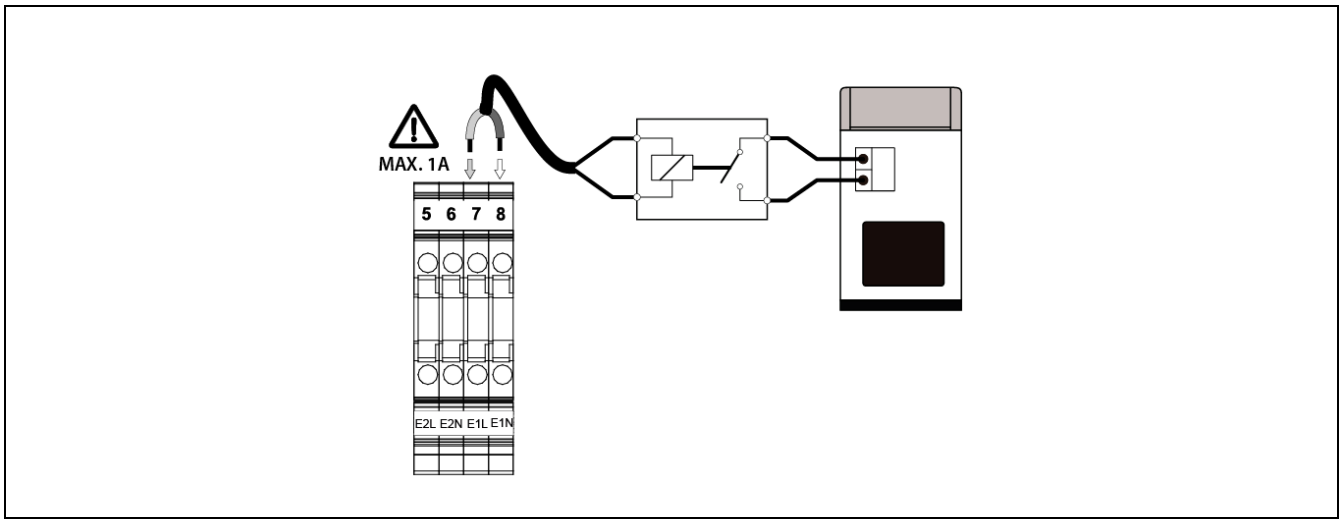

IMPORTANT: Before carrying out any work on the heat pump electrical installation, ensure it is disconnected from the mains.

6.7.5 Connecting the DHW diverter valve (G1)

When installing an DHW tank in combination with the heat pump, a motorised 3-way diverter valve must be installed between the appliance and the installation. This valve enables the heat pump electronic control to divert the water to either the DHW tank (in DHW mode) or to the Heating/Air Conditioning circuit (in Heating or Cooling mode).

The valve is connected at electrical terminals **G1L(3)** and **N(1)** (Neutral) on the heat pump component terminal strip. The motorised diverter valve must be either a 2-wire valve (with return spring) or a 3-wire valve with phase return. In the latter case, the phase wire supplying the valve (line) must be connected to terminal **L(4)** of the terminal strip. The figures below show how the motorised valve is connected:

2-wire valve:

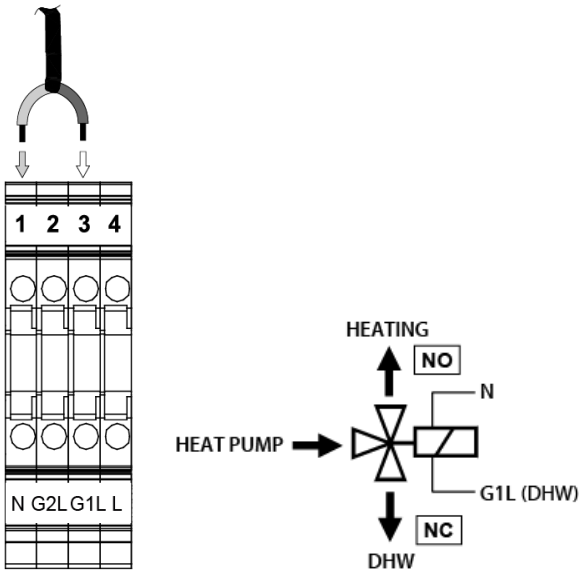

3-wire valve:

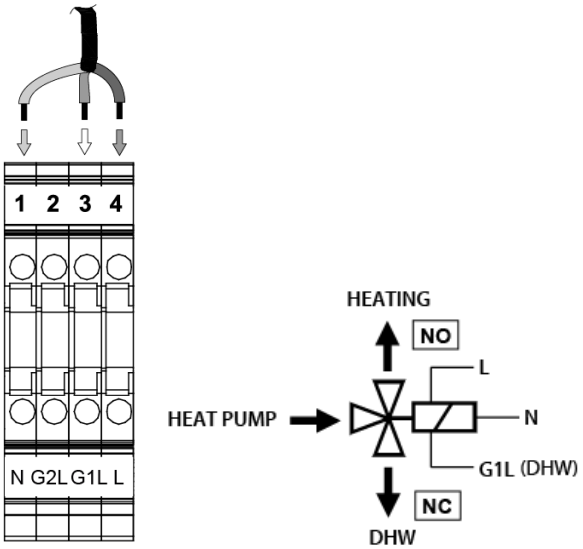

NO: Socket **Open** in idle mode (motor not energised).
NO: Socket **Closed** in idle mode (motor not energised).

IMPORTANT: Before carrying out any work on the heat pump electrical installation, ensure it is disconnected from the mains.

6.7.6 Connecting a backup energy source for Heating (E2)

A backup heating element (optional) for Heating can be connected to the **DUAL CLIMA HT PRO** heat pump. The element must be connected to the socket provided for this purpose on the tank.

The element is connected between electrical terminals **E2L (5)** and **E2N (6)** (Neutral) on the heat pump component terminal strip.

IMPORTANT: The output relay E2 activating the element has a maximum consumption capacity of 1A, so to connect an element a relay must be run between the terminals of the terminal strip and the element.

DOMUSA TEKNIK offers the option of a kit consisting of an element with a relay included, specially designed for installation on the **DUAL CLIMA HT PRO** heat pump.

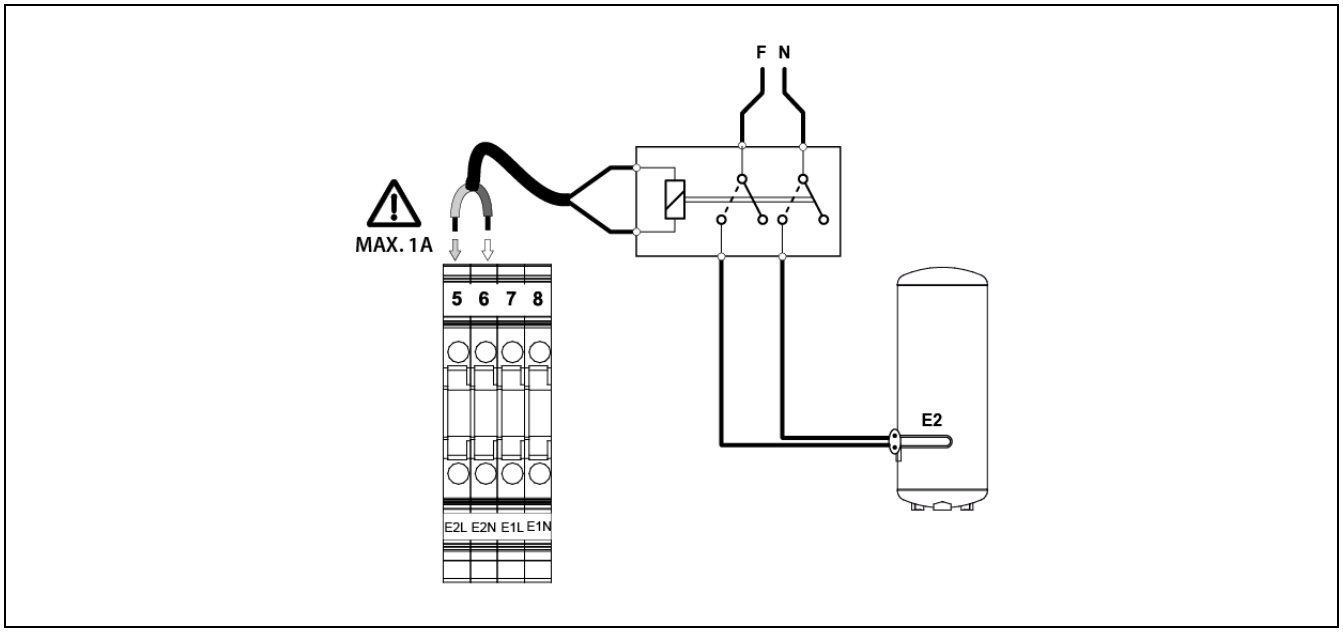

IMPORTANT: Before carrying out any work on the heat pump electrical installation, ensure it is disconnected from the mains.

As an alternative to the heating element, a conventional energy source such as an oil-fired, gas-fired, electrical or biomass boiler can be connected to the **DUAL CLIMA HT PRO** heat pump. In this case the heating installation must be equipped with an intermediate heat exchange system allowing hydraulic connection of this backup energy source, preferably separate from the heat pump water circuit.

To make the electrical connection between the backup energy source and the heat pump, use the same terminals as previously described, i.e. **E2L (5)** and **E2N (6)** (Neutral). Depending on the characteristics of the installation and the type of backup boiler, the electrical connection may be made in at least two different ways:

Voltage connection

This type of connection takes advantage of relay output **E2** to directly activate the energy source (switch on the boiler, activate a backup circulation pump, etc.). To make this connection, connect the heat pump terminals **E2L (5)** and **E2N (6)** to the power supply input of the boiler and/or backup installation components you wish to activate. To make the connection correctly, carefully follow the diagram below:

IMPORTANT: The output relay E2 has a maximum consumption capacity of 1A, so a relay must be inserted on connecting a boiler and/or backup installation components.

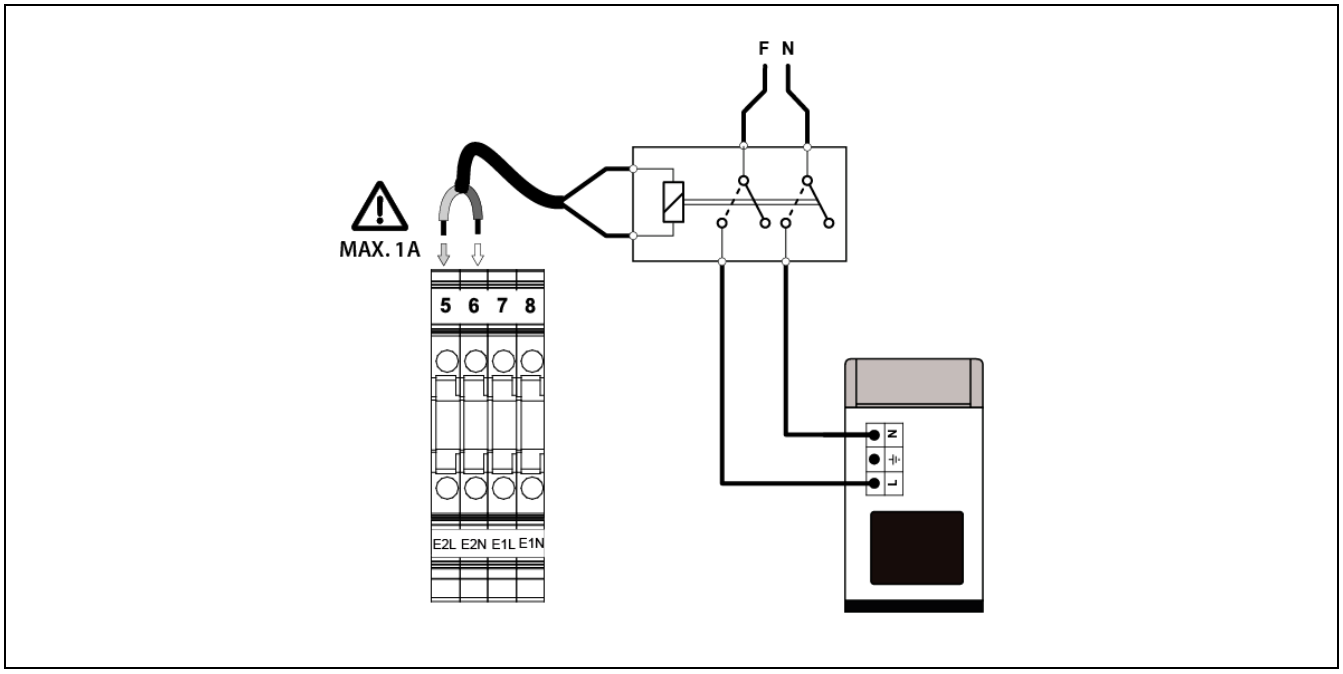

IMPORTANT: Before carrying out any work on the heat pump electrical installation, ensure it is disconnected from the mains.

Voltage-free connection

If the control input for activating and deactivating the backup energy source is voltage-free (a room thermostat input or telephone relay input, for example), you must insulate the energised output of the heat pump from the voltage-free input of the auxiliary energy source. To do this, run a relay between the heat pump output **E2** and the boiler control input. To make the connection correctly, carefully follow the diagram below:

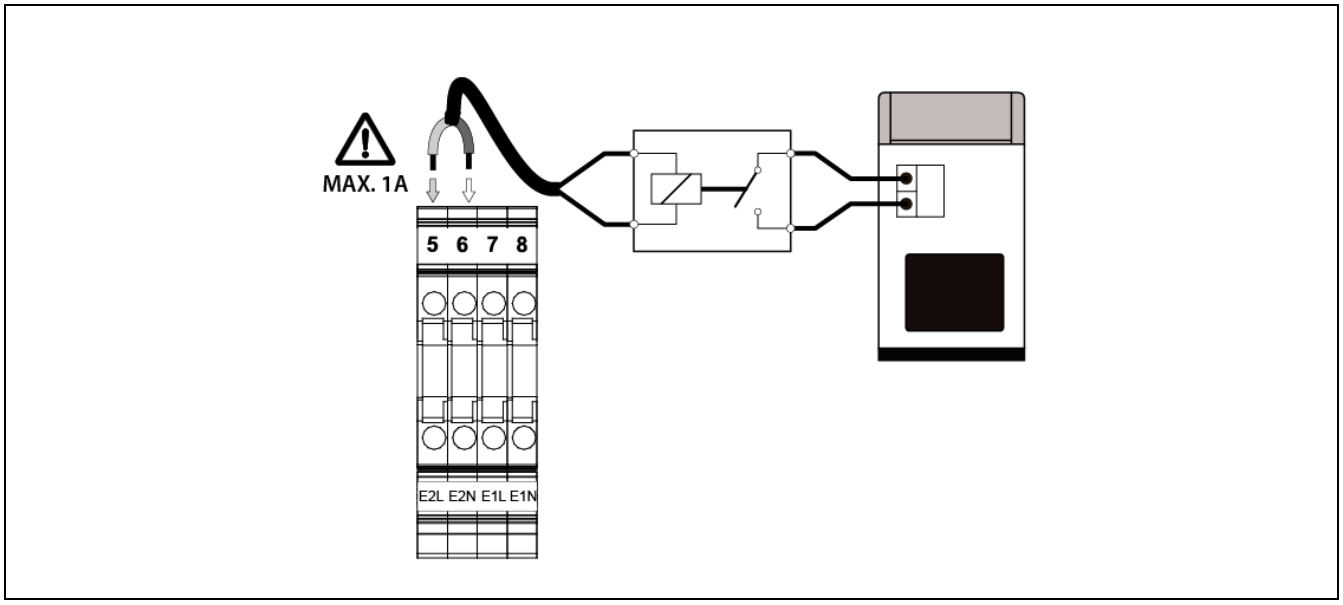

IMPORTANT: Before carrying out any work on the heat pump electrical installation, ensure it is disconnected from the mains.

6.7.7 Connecting the Heating/Cooling diverter valve (G2)

If the water is to be diverted to different circuits according to whether the appliance is in Heating or Cooling mode (for radiator heating and fancoil cooling, for example), a motorised 3-way diverter valve must be installed between the appliance and the installation. This valve enables the heat pump electronic control to divert the water to either the heating circuit in Heating mode or the Air Conditioning circuit in Cooling mode.

The valve is connected at electrical terminals s **G2L (2)** and **N (1)** (Neutral) on the heat pump component terminal strip. The motorised diverter valve must be either a 2-wire valve (with return spring) or a 3-wire valve with phase return. In the latter case, the phase wire supplying the valve (line) must be connected to terminal **L(4)** of the terminal strip. The figures below show how the motorised valve is connected:

2-wire valve:

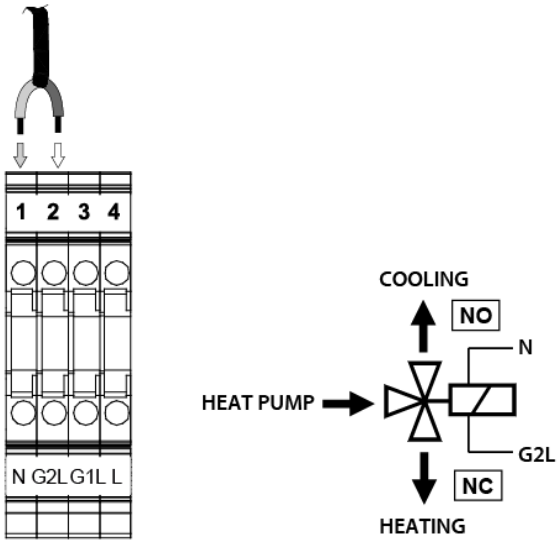

3-wire valve:

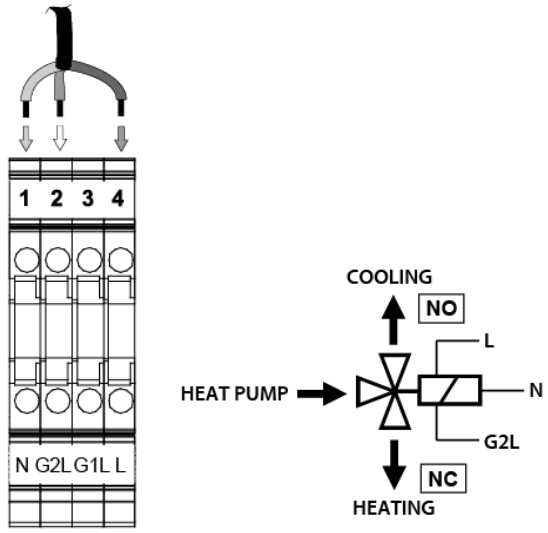

NO: Socket **Open** in idle mode (motor not energised).
NO: Socket **Closed** in idle mode (motor not energised).

IMPORTANT: Before carrying out any work on the heat pump electrical installation, ensure it is disconnected from the mains.

6.7.8 Connecting the backup pump (C2 and C3)

Two circulation pumps (**C2 and C3**) can be connected to the **DUAL CLIMA HT PRO** heat pump to increase the water flow in the appliance if necessary, in addition to the flow obtained from its own internal pump (**C1**).

Backup pump connection for heating and/or cooling (C2)

This circulation pump (**C2**) will run in parallel with the appliance's internal pump (**C1**), but only when the appliance is running in Heating or Cooling mode.

The element is connected between electrical terminals **C2L (10)** and **N (11)** (Neutral) on the heat pump component terminal strip.

Connecting a backup pump for DHW production mode (C3)

This circulation pump (**C3**) will run in parallel with the appliance's internal pump (**C1**), but only when the appliance is running in DHW production mode.

The element is connected between electrical terminals **C3L (9)** and **N (12)** (Neutral) on the heat pump component terminal strip.

Backup pump connection C2:

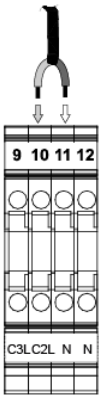

Backup pump connection C3:

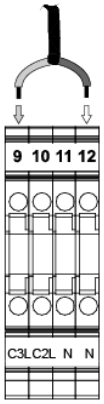

IMPORTANT: Before carrying out any work on the heat pump electrical installation, ensure it is disconnected from the mains.

6.7.9 Connecting a room sensor or thermostat (Optional)

The electronic control unit of the **DUAL CLIMA HT PRO** Heat Pump can also be used to optimise home comfort by installing the room temperature sensor (see *"Functioning with room sensor"*).

Terminals **T2 (31 - 22)** of the components terminal strip on the **DUAL CLIMA HT PRO** Heat Pump (see *"Electrical Diagrams"*) are prepared for the connection of a device to measure the temperature inside the home, which can be used for remote control of the heating circuit. There are 2 types of devices that can be connected: a room sensor or room thermostat.

Properly choosing the location of these devices inside your home is vital to manage comfortable heating properly. They should be installed in an area that is usually occupied (living room, main bedroom or similar) and if possible, not in areas with sources of heat or cold, such as the kitchen, bathrooms, cooled storage rooms, etc. Moreover, it should be installed at 1.5 meters above the floor and as far as possible from any source of heat or cold that might interfere with the thermostat, such as windows, fireplaces, heaters, radiators and so on.

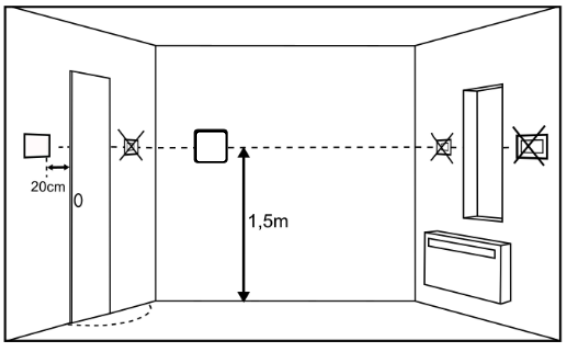

IMPORTANT: Whenever any work is done on the electrical installation, make sure it is disconnected from the main electrical supply network.

Room sensor

This option requires using the **AF sensor** supplied as an optional accessory by **DOMUSA TEKNIK**, from its range of air source accessories. If the user does not wish to install cables, another alternative is to install a wireless room device, an **Confort iC** remote control or an **Sonda iC** (see *"Installation with wireless devices Confort iC and/or Sonda iC"*).

The sensor measures the temperature inside the home, sends it to the the control panel screen. The user can select the desired room temperature setpoint at any time (see *"Selecting temperatures"*) and can adjust the temperature according to a time schedule (see *"Time programming"*). The electronic control unit of the heat pump can adjust the operating conditions to achieve the desired degree of comfort and vary the heat pump temperature to optimise heating and cooling operation and efficiency.

Take the following steps to install a room sensor:

- Disconnect the heat pump from the mains power supply.
- Connect the room sensor to the **T2 (31 - 32)** terminals of the components terminal strip (see *"Electrical diagrams"*). The cable used to connect the room sensor should not be more than 50 meters long (cable section between 0.25 ÷ 1.25 mm^2).
- Connect the boiler to the mains power supply again.
- Set up the heat pump to operate with a "Room Sensor", by setting parameter **P150** to **4** in the "System parameters" (see "*Settings Menu*").
- The electronic control unit allows the user to change the setting measured by the room sensor in parameter **P146**. The first step is to wait for at least 10 minutes for the temperature setpoint to stabilise (without touching the room temperature sensor).

Room thermostat

A room thermostat connected to the heat pump will deactivate the demand for heating and/or cooling in Zone 1, depending on its settings. Moreover, if it can be programmed (programmable thermostat), the user can set the desired periods of operation.

Take the following steps to install a room thermostat:

- Disconnect the heat pump from the mains power supply.
- Connect the room thermostat to the **T2 (31 - 32)** terminals of the components terminal strip (see *"Electrical diagrams"*).
- Connect the boiler to the mains power supply again.
- Set up the heat pump to operate with a "Room Thermostat", by setting parameter **P150** to **5** in the "System parameters" (see "*Settings Menu*").

6.7.10 Connecting an outdoor temperature sensor OTC (Optional)

The electronic control unit of the **DUAL CLIMA HT PRO** Heat Pump can be used to adapt home comfort to the outdoor weather conditions (see *"Functioning according to outdoor temperature conditions OTC"*).

For this option, it is advisable to install and use the **AFS sensor** supplied as an optional accessory in the **AIR Hydraulic Kit** by **DOMUSA TEKNIK**, if applicable. Read the installation instructions manual supplied with the Kit carefully for the correct installation of the **AFS sensor**. In case that there is not an **AIR Hydraulic Kit** installed, or you wish to avoid installing cables, you can choose to install a **Sonda iC** wireless temperature device (see "*Installation with Confort iC and/or Sonda iC wireless devices*").

The **AFS sensor** is designed to be installed outside the home and can be fixed to a wall. For proper comfort management, choosing the right location is important. It is recommended to place it on a north-facing wall, protected from rain and humidity, and avoiding, as far as possible, direct sunlight or any heat or cold sources that could distort the temperature reading, such as extractor vents, flue ducts, etc. It should also be located in an easily accessible location to allow for any necessary maintenance.

6.7.11 Connecting the iConnect module (Optional)

The **DUAL CLIMA HT PRO** heat pump allows for the connection of an **iConnect** multifunction module, offered as an optional accessory by **DOMUSA TEKNIK**. For the electrical connection, the module comes standard with two pre-wired electrical hoses; one for the power supply and the other for communication with the heat pump (**COMM**).

For proper installation and connection of the **iConnect** module to the **DUAL CLIMA HT PRO** heat pump, please carefully read the instruction manual supplied with the module.

6.7.12 Installation with wireless devices Confort iC and/or Sonda iC (Optional)

The **DUAL CLIMA HT PRO** heat pump, using the **iConnect** module, optionally allows the connection of wireless room temperature measuring devices (without cables), through which the comfort of the home can be improved by managing up to 3 heating zones, in addition to an external sensor. To do this,firstly the **iConnect** module must be connected to the heat pump (see *"Connecting the iConnect module"*).

Two types of wireless devices can be installed: the **Confort iC** remote control and/or the **Sonda iC** temperature sensor. To do this, a **Receptor RF iC** module radio must be connected to the **iConnect** module. For proper installation and connection of the **Receptor RF iC** module radio to the **iConnect** module, please carefully read the instruction manual supplied with the module **iConnect**.

The **Confort iC** remote control is designed to be used inside the home and may be fixed to the wall or placed on top of a flat surface (using the supporting stand supplied). The location should be representative within the heating circuit to which the control is linked.

A suitable choice of location for these devices within the home will be important to ensure the correct management of comfort in the home. It is advisable to install them in an area of the home where they are normally used (living room, dining room, master bedroom, or similar), avoiding rooms where heat or cold could be generated, such as kitchens, bathrooms, refrigerated larders, etc. Moreover, the chosen location should not cause interference in the radio signal, nor should it be in an area of low signal cover with respect to the **Receptor RF iC** radio module. It is also recommended to install them about 1.5 m above the ground and as far away as possible from any source of heat or cold that could distort the temperature reading, such as windows, fireplaces, cookers, radiators, etc.

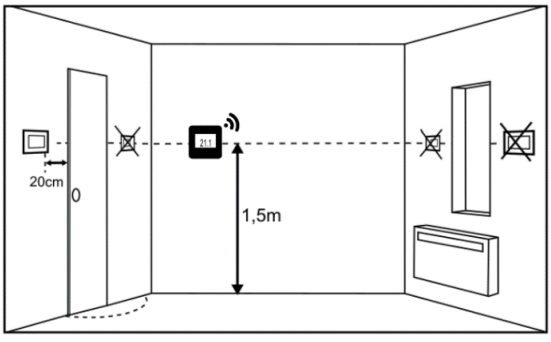

The **Sonda iC** may be located outside the dwelling if it is to be used as an outdoor temperature sensor. In this case, it is recommended to locate the probe on a north-facing façade wall, sheltered from rain and humidity, and avoiding, as far as possible, direct sunlight. It should also be located in an easily accessible place, so that maintenance work required for this type of wireless device, such as changing the batteries and wireless pairing with the radio module, can be carried out.

Once the desired wireless devices have been installed, for proper operation, they must be paired with the **Receptor RF iC** radio module and linked to the heating/cooling zones where each one is located. To correctly complete the pairing process, follow the steps indicated in the "Pair Wireless Device" submenu of the "Settings Menu" of this manual.

6.7.13 Connecting an AIR Hydraulic Kit

The **DUAL CLIMA HT PRO** heat pump can be installed along with an **AIR Hydraulic Kit** from the wide range of products offered by **DOMUSA TEKNIK**, thereby increasing the performance features of the heat pump to provide heating and cooling service.

Communication between the **AIR Hydraulic Kit** and the **DUAL CLIMA HT PRO** heat pump is performed by the **iConnect** communications module; therefore, before connecting the AIR Hydraulic Kit, the **iConnect** module must be connected to the **iConnect** module (see *"Connecting the iConnect module"*). Read the installation instructions manual supplied with the Kit carefully for correct installation of the **AIR Hydraulic Kit**.

6.7.14 Connecting room thermostats for "AUTO" mode

The **DUAL CLIMA HT PRO** heat pump has two connections on the component terminal strip for connecting up to 2 room chronothermostats or room thermostats (see *"Connection Diagram"*), enabling the heating and/or cooling modes of the heating/air conditioning installation to start up or stop, switching off the heat pump when the desired room temperature is reached and switching it on when the temperature in the home falls below this value. The input **C-COM (26-24)** activates and deactivates Cooling mode and the input **H-COM (25-24)** activates and deactivates Heating mode, and the operating modes of the heating/air conditioning installation are therefore managed automatically and remotely (**"AUTO"** mode) from the location of the room thermostat(s) installed.

Terminals **C (26)**, **H (25)** and **COM (24)** are supplied by default with a bridge connected to each one, so **both** bridges will have to be removed before connecting the room thermostat(s), regardless of the configuration of the thermostats to be installed.

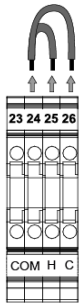

Up to 4 different room thermostat configurations may be installed, depending on the type of thermostat or combination of thermostats used. The following sections provide a detailed description of the functioning and installation of each of these configurations.

IMPORTANT: Before carrying out any work on the heat pump electrical installation, ensure it is disconnected from the mains.

Connecting a switched 3-wire Hot/Cold thermostat ("AUTO" mode)

As well as selecting the desired temperature and operating times, if the type of thermostat used is a chronothermostat the user can select the operating mode (Heating ☀/Cooling ❄) on the thermostat itself.

This type of thermostat uses 3 communication wires to function: one for the Heating mode activation signal, one for the Cooling mode activation signal and the other for the common signal. According to the status of each signal, the **DUAL CLIMA HT PRO** heat pump manages the Heating/Cooling operating modes as follows:

Heating mode	Cooling mode	OFF (standby) (temp. reached)
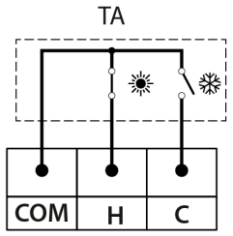	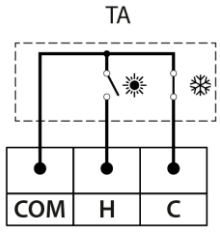	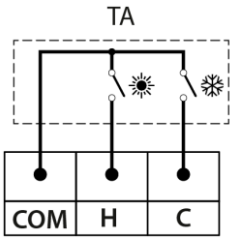

Terminals **C (26)**, **H (25)** and **COM (24)** are supplied by default with a bridge connected to each one, so on installing this type of thermostat **both** bridges will have to be removed and the thermostat connected as shown in the figure below:

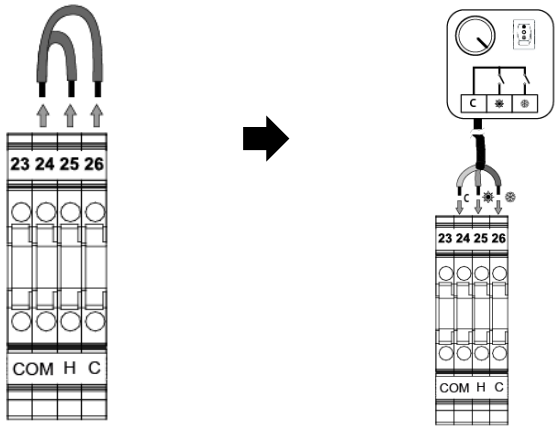

IMPORTANT: Before carrying out any work on the heat pump electrical installation, ensure it is disconnected from the mains.

Connecting a 2-wire Hot/Cold switching thermostat

With this type of thermostat, the desired temperature and the operating times can be selected, if it is a chronothermostat. Unlike a 3-wire hot/cold switching thermostat, a 2-wire thermostat does now allow operating mode selection (Heating☀/Cooling❄) on the thermostat alone: the operating mode has to be selected on both the thermostat and the heat pump. For this room thermostat selection process to function correctly, the heat pump and the thermostat must both be configured **for the same single operating mode**, either Heating or Cooling.

As indicated in the figure, the heat pump electronic control will begin to work in "Manual" mode if this is required by the thermostat, i.e. the Heating/Cooling operating modes must be selected manually on the heat pump control panel.

OFF (standby) (temp. reached)	Manual mode
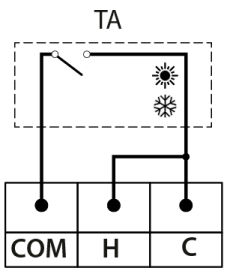	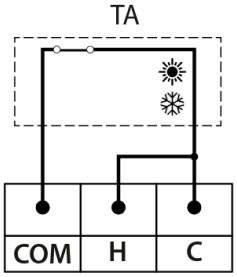

Terminals **C (26)**, **H (25)** and **COM (24)** are supplied by default with a bridge connected to each one, so on installing this type of thermostat **both** bridges will have to be removed and the thermostat connected as shown in the figure below, and a bridge between inputs **C (26)** and **H (25)** will be required:

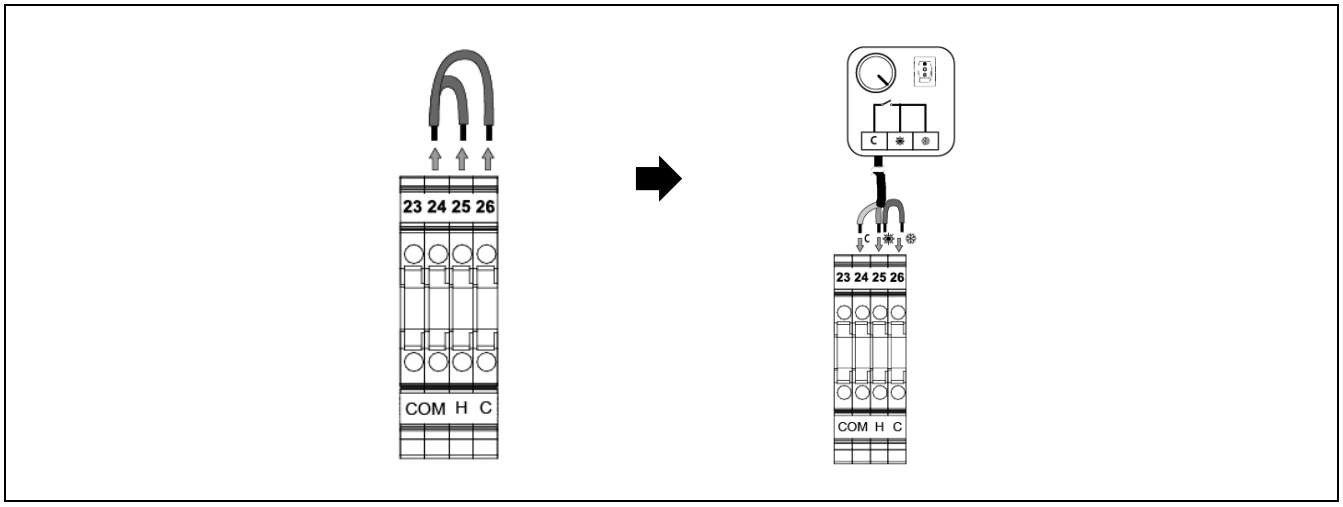

IMPORTANT: Before carrying out any work on the heat pump electrical installation, ensure it is disconnected from the mains.

Connecting two room thermostats

In this type of configuration 2 single room thermostats are connected, one to terminals **C (26)** and **COM (24)** (thermostat for Cold, **TAF**) and the other to terminals **H (25)** and **COM (24)** (thermostat for Heat, **TAC**). Each one will manage a different operating mode, and each thermostat must therefore be of a type compatible with the operating for which it has been installed. The thermostat connected to the cold input (**TAF**) must send a request (closed circuit signal) when the room temperature is higher than the desired temperature (setpoint temperature), and the thermostat connected to the heat input (**TAC**) must send a request (closed circuit signal) when the room temperature is lower than the desired temperature (setpoint temperature).

The **DUAL CLIMA HT PRO** heat pump will activate the Heating/Cooling operating modes according to the status of the signal received from each thermostat, as follows:

Heating mode	Cooling mode	OFF (standby) (temp. reached)	Manual mode
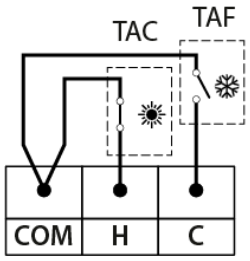	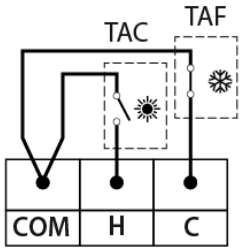	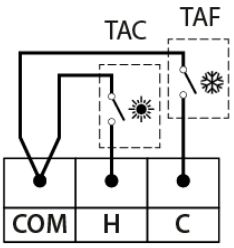	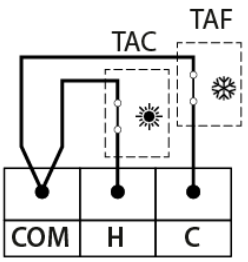

As indicated in the figure, the heat pump electronic control will begin to work in "Manual" mode if the room thermostat setpoint temperatures are selected so that both of them send an operating request at the same time, i.e. the Heating/Cooling operating modes must be selected manually on the heat pump control panel. To avoid this situation, it is essential to **ensure that the correct temperatures are selected on each one, in order to prevent crossover, with both thermostats being activated at the same time.**

Terminals **C (26)**, **H (25)** and **COM (24)** are supplied by default with a bridge connected to each one, so to install the thermostats **both** bridges will have to be removed and the thermostats connected as shown in the figure below:

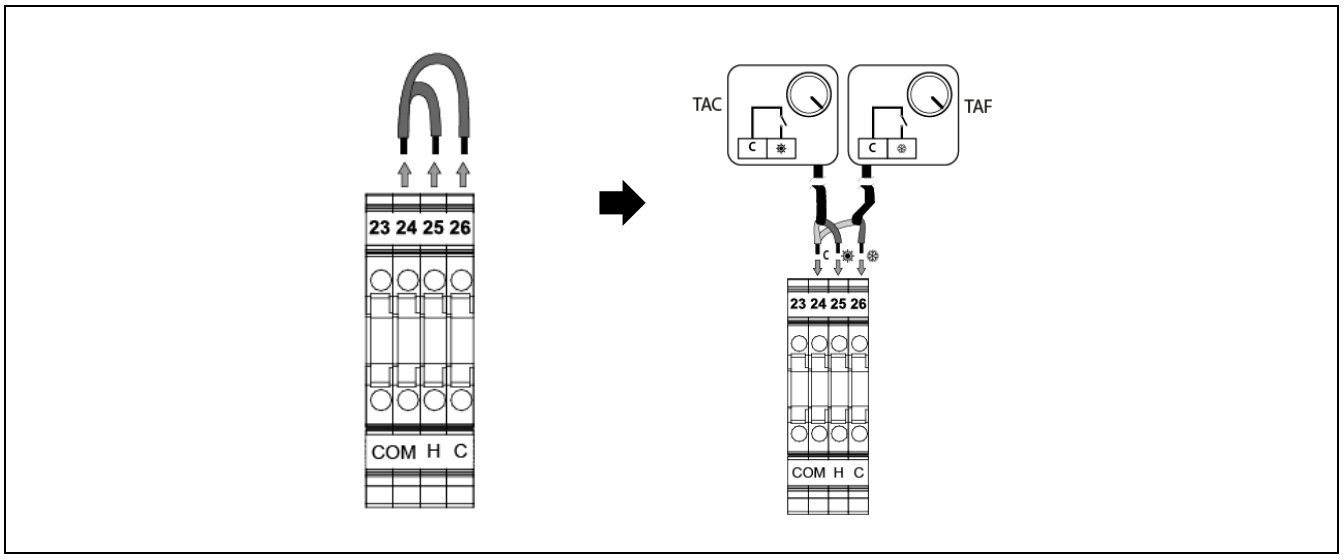

IMPORTANT: Before carrying out any work on the heat pump electrical installation, ensure it is disconnected from the mains.

Connecting one room thermostat

In this type of configuration one single thermostat is connected, either to the input **C (26)** and **COM (24)** (thermostat for Cold, **TAF**), or to the input **H (25)** and **COM (24)** (thermostat for Heat, **TAC**). For this room thermostat management setting to function correctly, the heat pump must be configured for **one single** operating mode, either Heating or Cooling (see *"Heat pump configuration"*). Depending on which input the thermostat is connected to, it will manage the corresponding operating mode and the type of room thermostat must be able to do this. The thermostat connected to the cold input (**TAF**) must send a request (closed circuit signal) when the room temperature is higher than the desired temperature (setpoint temperature), and the thermostat connected to the heat input (**TAC**) must send a request (closed circuit signal) when the room temperature is lower than the desired temperature (setpoint temperature).

Terminals **C (26)**, **H (25)** and **COM (24)** are supplied by default with a bridge connected to each one, so on installing the thermostat **both** bridges will have to be removed and the thermostat connected as shown in the figure below, according to the mode to be managed:

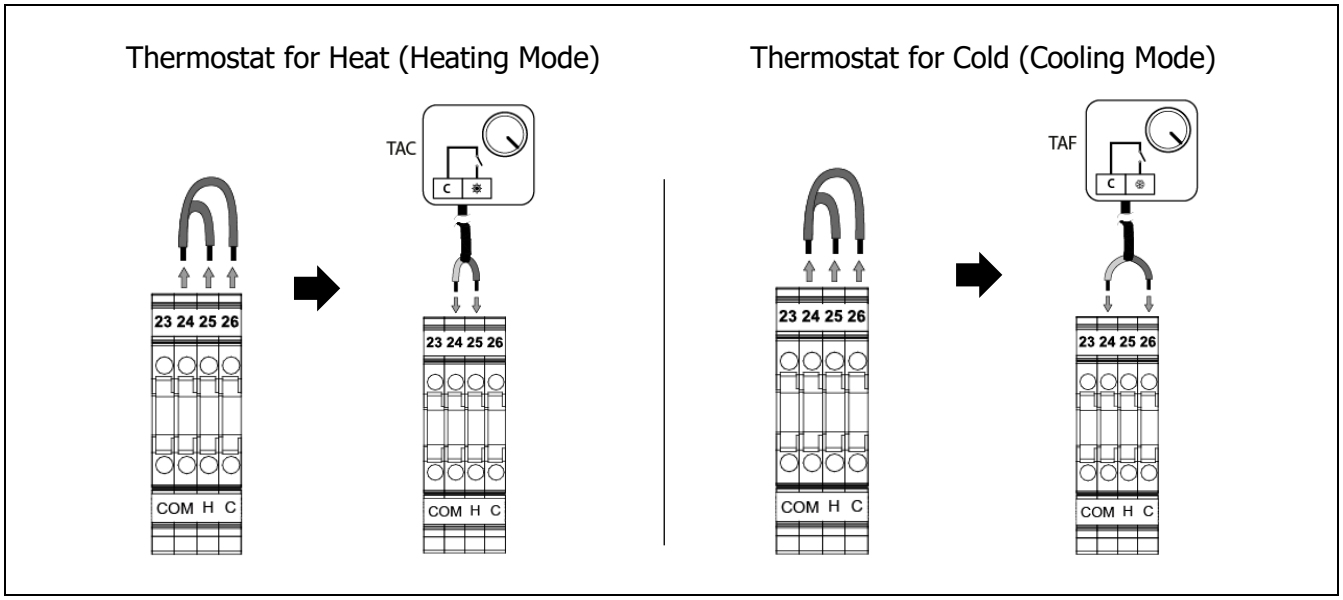

IMPORTANT: Before carrying out any work on the heat pump electrical installation, ensure it is disconnected from the mains.

6.7.15 SG Ready connection

The **DUAL CLIMA HT PRO** heat pump has two connections on the component terminal strip for connecting 2 inputs for the SG Ready function (see "Connection Diagram"), enabling management of the SG function. The input **SG1 (27-28)** activates and deactivates the SG1 connection and the input **SG2 (29-30)** activates and deactives the SG2 connection, for remote automatic management of the operating modes of the SG Ready function. (see *Operation*).

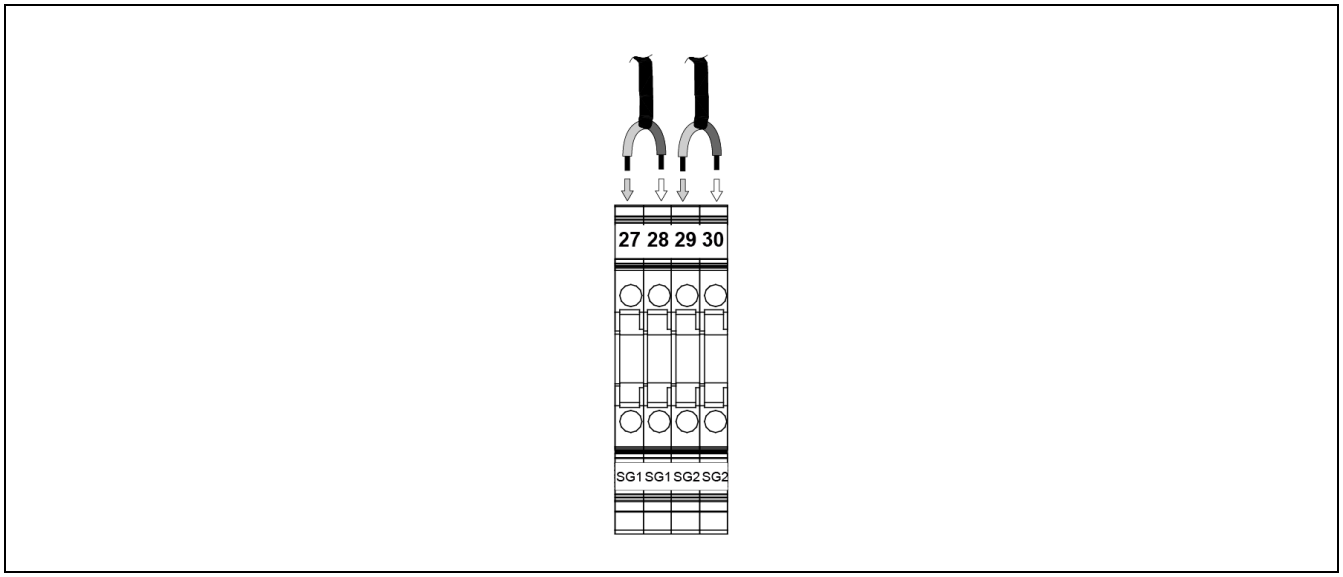

IMPORTANT: Before carrying out any work on the heat pump electrical installation, ensure it is disconnected from the mains.

6.8 Freeze Protection

The **DUAL CLIMA HT PRO** is an appliance for installation on the outside of the building and it will consequently be exposed to frost during periods of extremely cold weather. Freeze protection is therefore of the utmost importance for this type of appliance, as its internal construction and the amount of water contained in it make it even more prone to freezing. If the water inside the heat pump freezes it can cause the heat exchanger to break, stopping its functioning and making costly repairs necessary.

It is therefore **compulsory** to use an anti-freeze system in the installation to prevent the water in the units from freezing. **DOMUSA TEKNIK** recommends using one of the following systems:

- **Anti-freeze liquid (Glycol):** The antifreeze liquid must be diluted with the water inside the heat pump. The concentration of glycol in the mixture must be calculated taking into account the historical minimum temperature of the climatic zone where the machine is located, and the concentrations indicated by the glycol manufacturer for this minimum temperature. It is also essential to regularly check the water-glycol mixture to ensure its properties and correct mixture percentage are maintained over time (at least once a year).
- **Outdoor anti-freeze valve:** The anti-freeze valve(s) must be installed on the heat pump water circuit, preferably inside the heat pump. You **must ensure** that when they are activated, they drain all the water from inside the appliance. The **DUAL CLIMA HT PRO** heat pump has two sockets for connecting two anti-freeze valves. **DOMUSA TEKNIK** offers the option of an anti-freeze valve kit, specially designed for installation on the **DUAL CLIMA HT PRO** heat pump.

In addition to these active anti-freeze safety systems, a water filter must be installed in the heat pump water circuit to prevent obstruction or narrowing of the pipes due to dirt in the installation, which would speed up the freezing process or cause the water drainage devices to malfunction. The filter **MUST** be installed before filling the installation with water, on the appliance's return line, to prevent dirty water from entering the heat exchanger. The type of filter installed must be adapted to the particular characteristics of each installation (type and material of the water pipes, type of water used, water volume of the installation, etc.). The water filter must be checked at least once a year and cleaned if necessary, although in new installations it is recommended to check it a few months after start-up.

DOMUSA TEKNIK's guarantee does not cover any damage caused by failing to use any of the freeze protection systems described above.

In installations where glycol has not been added, in case of prolonged periods of absence the water must be drained from the appliance in order to prevent accidental power failures and/or heat pump failure. During periods of frost, a power outage of 30 minutes or more may cause the water to freeze.

The **DUAL CLIMA HT PRO** heat pump's electronic control has a function for protecting the water inside it from freezing during periods of frost. **For this function to remain enabled and on standby, the heat pump must be connected to the mains and have a power supply, even when it is switched off or not in use.**

The anti-freeze function will start up the circulation pumps, the compressor and other system components according to the temperature conditions it detects, both of the water and outside the home. The following sections describe the functioning of the **DUAL CLIMA HT PRO** heat pump's anti-freeze process.

6.8.1 DHW mode anti-freeze process

When the temperature of the Domestic Hot Water tank falls below +5ºC, the system starts up the anti-freeze function, enabling DHW mode and activating the compressor and backup output E1. When the water temperature in the tank reaches 15ºC, the function stops. If the heat pump stays on for more than 30 minutes without reaching the indicated temperature, the DHW anti-freeze function will stop.

If the DHW temperature continues to be lower than 5ºC when the anti-freeze process is complete, the heat pump will stop and an error code will appear on the display.

6.8.2 Heating/Cooling mode anti-freeze process

When the heat pump water temperature falls below **P25** (3ºC by default) in the System Parameters (see *Settings Menu*), detected on either flow or return, the system starts up the anti-freeze function, activating the water circulation pumps (**C1** and **C2**). If the external temperature is below 15ºC, the heat pump will also be started up. When the water temperature reaches 10ºC or the heat pump has been running for more than 30 minutes without having reached this temperature, the anti-freeze function will stop.

If the flow or return temperature continues to be lower than **P25** when the anti-freeze process is complete, the heat pump will stop, and an error code will appear on the display.

Also, if the external temperature falls below 0ºC at any time, the water circulation pumps (**C1** and **C2**) will start up within a time interval defined in **P21** for one minute.

IMPORTANT: It is compulsory to use an anti-freeze system in the installation to prevent the water in the units from freezing.

IMPORTANT: We do not recommend changing parameters P25 and P21. Incorrectly setting these parameters could cause failure or breakdown of the appliance.

NOTE: For the anti-freeze function to remain enabled and on standby, the heat pump must be connected to the mains and have a power supply.

DOMUSA TEKNIK's guarantee does not cover any damage caused by failing to use a freeze protection system in the installation.

7 HEAT PUMP CONFIGURATION

The default configuration of the **DUAL CLIMA HT PRO** heat pump is Heating, Cooling and DHW production. If the installation lacks any of these services they **MUST** be disabled, by adjusting the system parameters on the control unit (see *"Settings Menu"*). If any of them is disabled, the operating modes (**8**) for the service in question cannot be selected.

Disabling DHW production

If the installation does not have a storage tank for DHW production, this mode must be disabled. To disable this function, adjust parameter **P63** of the System Parameters (see *Settings Menu*). By default, the heat pump is supplied with DHW production enabled. To disable it, set parameter **P63** to **0**. You must also disconnect the heat pump from the mains and connect it again to validate this change.

Disabling the Heating or Cooling function

If the installation does not have a water circuit designed to work in heating mode (underfloor heating, radiators, etc.) or cooling mode (underfloor cooling, fan coils, etc.), these modes must be disabled. To disable these functions, adjust parameter **P62** of the System Parameters (see *Settings Menu*). By default, the heat pump is supplied with the heating and cooling functions enabled.

To disable heating mode, set parameter **P62** to **1**. The heat pump will automatically enable cooling mode. You must also disconnect the heat pump from the mains and connect it again to validate this change.

To disable cooling mode, set parameter **P62** to **2**. The heat pump will automatically enable heating mode. You must also disconnect the heat pump from the mains and connect it again to validate this change.

IMPORTANT: Leaving a function enabled if the installation is not designed to work with it can cause malfunctioning of the heat pump and SERIOUS damage to the installation.

8 TIME PROGRAMMING

The electronic control of the **DUAL CLIMA HT PRO** pump includes a time programmer (**5**) for programming its switch-on and switch-off times and the desired operating modes for each one (weekly programming). To accede to the time programming screen, press the programming touch button on the start screen. Press the home touch button to exit the menu and return to the start screen.

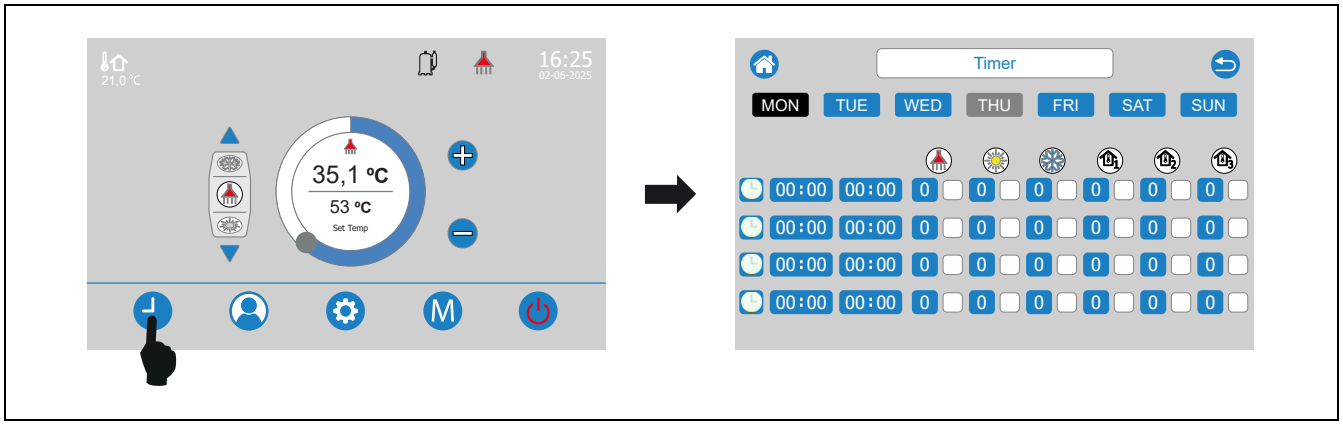

There are 4 program periods available for each day of the week. Operating modes and setpoint temperatures can be activated ( ) for each program period. It is not necessary to use all the program periods, the heat pump will only run according to the active programmes for each period ( ).

To enable a programme, proceed as follows:

- Select the day of the programme.
- Enter the programme activation time. For a correct operation of time program for consecutive periods, it is compulsory to maintain a 5 minute period between end time and start time of both periods.
- Enter the programme deactivation time. For a correct operation of time program for consecutive periods, it is compulsory to maintain a 5 minute period between end time and start time of both periods.
- Select the heat pump operating mode by pressing touch button to select the time interval.
- Define the operating setpoint for each operating mode selected.
- Activate the programming defined by pressing touch button:
  - : Programming activated.
  - : Programming deactivated.

NOTE: To ensure correct functioning of both the time programming and the heat pump, make sure you do not set different programmes within the same time interval.

When the time programmer has been set and is functioning, the programming symbol ( ) will be permanently lit up on the electronic control start screen display, indicating that the time programming is activated. To restore manual functioning, go back to the time programming menu and disable **all the programmes enabled** using the programme deactivation button ( ).

9 WIRELESS DEVICES CONFORT iC and SONDA iC (OPTIONAL)

The **DUAL CLIMA HT PRO** heat pump can also be supplied along with wireless devices to improve home comfort by managing up to 3 heating/cooling zones, as well as an outdoor sensor.

There are 2 types of wireless devices that can be connected: the **Confort iC** remote control and/or the **Sonda iC** temperature sensor. Both the **Confort iC** remote control and the **Sonda iC**, temperature sensors are compatible and can be used simultaneously with the **Receptor RF iC**, so a combination of remote controls or room sensors can be prepared for each Zone to ensure customised management of home comfort.

The **Confort iC** remote control and the **Sonda iC** are compatible with the **iConnect** connectivity of the heat pump, which means that if the heat pump is registered in the **iConnect** application remote controls and/or wireless sensors can be installed.

Operation of the Confort iC wireless remote control

The **Confort iC** wireless remote control is designed to manage the desired room temperature in the area of the home where it is located by sending a radio signal to the **Receptor RF iC** module connected to the heat pump. The two-way radio communication is encrypted, allowing secure transmission of information from the heat pump to the remote control and vice versa, including alarm statuses, operating mode and weekly schedule, among other information. The remote control has a backlit LCD screen that displays this information.

When a **Confort iC**, wireless remote control is connected, the heat pump can be controlled from the room where it is installed. The various temperatures and parameters that can be selected in the remote control can be changed on the heat pump's control panel, as well as in the **iConnect** application (if it is registered). If a time schedule has been programmed and the heat pump is registered in the **iConnect** application, the heat pump will run exclusively according to the time schedule programmed in the **iConnect** application.

The wireless remote control is easy to install; simply follow the instructions in the section titled *"Installation with wireless devices Confort iC and/or Sonda iC (Optional)"* in this manual. To ensure proper operation, read the instructions provided with the remote control carefully.

Operation of the Sondar iC wireless temperature sensor

The **Sonda iC** wireless temperature sensor is designed to measure the desired room temperature in the indoor area or outdoor temperature of the home and send it to the heat pump via an encrypted radio signal to the **Receptor RF iC** radio module. This temperature is displayed on the heat pump screen and helps to improve the degree of comfort in the home by maintaining the temperature setpoint selected on the heat pump or the **iConnect** application.

The **Sonda iC** temperature sensor is easy to install; simply follow the instructions in the section titled *"Installation with wireless devices Confort iC and/or Sonda iC (Optional)"* in this manual. To ensure proper operation, read the instructions provided with the sensor carefully.

10 *"iConnect"* CONNECTIVITY

The **DUAL CLIMA HT PRO** heat pump can be connected to the **DOMUSA TEKNIK** ***"iConnect"*** connectivity platform. To do this, you must install an iConnect multi-function module, offered as an optional accessory by **DOMUSA TEKNIK**. Once the communications module has been connected with the heat pump (see *"Connecting the iConnect module")*, the user will be able to register the heat pump in the **iConnect** application for smartphones, tablets or similar devices; the user can then manage all the heat pump and heating/cooling installation parameters remotely and receive warnings and alarms generated by the installation from anywhere in the world.

To register the heat pump in the **iConnect** app, carefully read the instruction manual supplied with the **iConnect** multi-function module.

11 AIR HYDRAULIC KITS (OPTIONAL)

All the models in the range of **DUAL CLIMA HT PRO** heat pumps can be connected to an **AIR Hydraulic Kit** to manage more than one heating/cooling circuit. Up to 3 heating circuits can be managed, depending on the **AIR Hydraulic Kit** model that is selected. Described below are certain general guidelines on the operation of the heat pump when it is connected to an **AIR Hydraulic Kit**. Refer to the instruction manual supplied with the kit for a detailed explanation of its operation.

Operation of the direct heating/cooling circuit

When the **AIR Hydraulic Kit** is equipped with a direct circuit (AIR "D" Kit), this circuit will work with the temperature setpoint of the selected heat pump and the room temperature set in the installed room device, if there is one. In addition, direct circuit operation can be selected according to outdoor temperature conditions (**OTC**). In this case, the temperature setpoint of the heat pump will depend on the outdoor temperature and the K Curve selected in parameters **P154**, **P155** and **P156** of the "System parameters" menu (see *"Settings Menu"*), and depending on the Zone that corresponds to the circuit, respectively.

Operation of the combined circuit in Zone 2

When the **AIR Hydraulic Kit** is equipped with a combined circuit (AIR "M" Kit), this circuit will correspond to Zone 2 heating/cooling and work with the temperature setpoint of the water flow selected on the Zone 2 temperatures screen and the room temperature set in the installed room device, if there is one. In addition, combined circuit operation can be selected according to outdoor temperature conditions (**OTC**). In this case, the temperature setpoint of the water flow will depend on the outdoor temperature and the K Curve selected in parameter **P155** of the "System parameters" menu (see *"Settings Menu"*).

12 USER MENU

The **DUAL CLIMA HT PRO** module electronic control has a User Menu (**8**) for the user to configure, manage and view different functions. To accede to the User menu, press the user menu touch button on the start screen. Press the home touch button to exit the menu and return to the start screen.

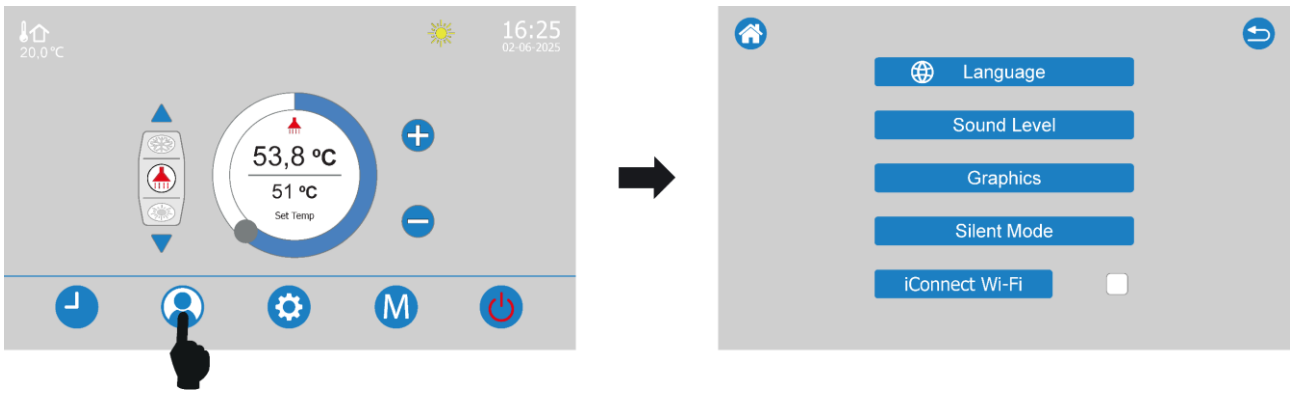

Language settings

Several languages are available on the **DUAL CLIMA HT PRO** heat pump electronic control unit, and the preferred language can therefore be set. When a language is selected, it will be used on all the displays, menus and descriptions.

Sound adjustment

This option can be used to adjust or mute the touch screen sound volume.

Graphics

The **DUAL CLIMA HT PRO** heat pump has an option for measuring the renewable energy generated in the installation. This option can be used to consult the renewable energy generated by the heat pump each day, month or year.

Silent Mode

This option allows you to select and adjust the Silent Mode settings using the following parameters:

Code	Definition	Range	Default
P15	Silent Mode	0 (Off) 1 (Silent Mode 1) 2 (Silent Mode 2)	0
P16	Start Time	0 ~ 23 (hour)	0
P17	End Time	1 ~ 24 (hour)	24

iConnect Wi-Fi

Press this option to activate the **Bluetooth** signal ("iConnect ON") of the **iConnect** module. Once it is activated, the user can start registering the heat pump in the **iConnect** APP. The first step is to download and install the APP in a mobile phone, tablet or similar device and access the "**Register device**" option of the "Settings/Devices" menu in the main menu (see *"Registering the heat pump in iConnect"* in the manual supplied with the IConnect module)

13 SETTINGS MENU

The **DUAL CLIMA HT PRO** module electronic control has a Settings Menu (**9**) for the user to accede and configure and view different **technical parameters**, functions and statuses. To accede to the Settings menu, press the settings menu touch button on the start screen. Press the home touch button to exit the menu and return to the start screen.

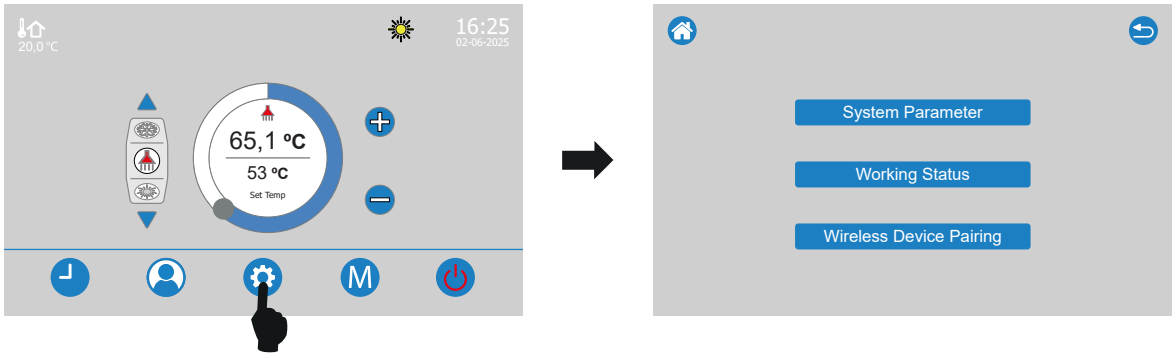

13.1 System Parameters

The Settings menu allows to manage all the technical parameters (**P**) who affect the operating of gas and water circuits of the **DUAL CLIMA HT PRO** heat pump. Any incorrect adjustment of the settings in this sub-menu could cause failure and/or breakdown of the appliance, and most of the system parameters must therefore only be adjusted by authorised staff (installer, Technical Assistant Service,…).

To accede to the sub-menu of the Setting menu, enter password"99". Once in the menu, press ⇦ and ⇨ buttons to browse through the setting parameters. Press the value of the current parameter to display the numeric screen to adjust the value and validate it by pressing "**Enter**". To exit the numeric screen without saving the new value, press the "**Esc**" key.

There follows a list of the settings that can be adjusted by the installer. Any adjustment of settings not on this list could cause serious failure and/or breakdown of the heat pump and **DOMUSA TEKNIK** will not be held liable for any damage caused by their incorrect modification by **unauthorised persons**.

Code	Definition	Range	Default value
P02	Heating temperature setpoint	25~75ºC	45ºC
P03	Cooling temperature setpoint	7~25ºC	12ºC
P04	DHW setpoint temperature	0:Off; 25~70 ºC	45ºC
P10	Interval of days for anti-legionella	7~ 99 days	7
P11	Anti-legionella function start time	0~23	23
P12	Anti-legionella duration	5~99 minutes	10
P13	Anti-legionella setpoint	50 ~ 70 ºC	70ºC
P14	Anti-legionella function	0 (Auto Mode) 1 (Manual Mode) 2 (Disabled)	2
P20	Circulation pump operating mode (C1)	0: Always running 1: Stop on reaching setpoint 2: Start-up every 15 minutes	0
P21	Anti-freeze interval	5~50min	30
P22	External temp. activating backup heating (E2)	-30~20ºC	0ºC
P23	External temp. activating backup DHW (E1)	-30~20ºC	0ºC
P24	Hysteresis activating E1 and E2	1~15ºC	5ºC

Code	Definition	Range	Default value
P25	Anti-freeze activation temperature	-15~5°C	3ºC
P35	Maximum DHW temperature with compressor	0~70°C	70ºC
P36	E1 and E2 activation time interval	0~999 min	15
P58	Flow-return temperatures difference setpoint for Heating mode.	3~8 ºC	5 ºC
P59	Minimum C1 circulation pump speed	2~8 (20% - 80%)	8
P62	Heating/cooling mode activation	0: Heating + cooling 1: Cooling only 2: Heating only	0
P63	DHW mode activation	0: Disable, 1: Enable	1
P81	E1 and E2 operating mode	0: Backup source mode 1: Auxiliary source mode 2: Passive combined mode 3: Active combined mode 4: Combined multi-stage mode	0
P82	External temp. activating auxiliary source	-30~20°C	-15
P117	Hysteresis for activation with room sensor in Heating mode	0,2~5 ºC	0,5 ºC
P118	Hysteresis for activation with room sensor in Cooling mode	0,2~5 ºC	0,5 ºC
P139	Flow-return temperatures difference setpoint for Cooling mode.	3~8 ºC	5 ºC
P140	Zone 1 room temperature setpoint	0: Off; 10.0~35.0ºC	Off
P141	Zone 2 room temperature setpoint	0: Off; 10.0~35.0ºC	Off
P142	Zone 3 room temperature setpoint	0: Off; 10.0~35.0ºC	Off
P146	Zone 1 room temperature correction	-5.0~+5.0ºC	0,0 ºC
P147	Zone 2 room temperature correction	-5.0~+5.0ºC	0,0 ºC
P148	Zone 2 room temperature correction	-5.0~+5.0ºC	0,0 ºC
P150	Zone 1 room device type	0: Not connected 1: Sonda iC 2: Confort iC 4: Sensor AF 5: Thermostat	0
P151	Zone 2 room device type	0: Not connected 1: Sonda iC 2: Confort iC 4: Sensor AFS (AIR Kit) 5: Thermostat	0
P152	Zone 3 room device type	0: Not connected 1: Sonda iC 2: Confort iC 4: Sensor AFS (AIR Kit) 5: Thermostat	0
P153	OTC outdoor sensor	0: Not connected 1: Sonda iC 4: Sensor AFS (AIR Kit)	0
P154	K curve for Zone 1 (OTC mode)	0: Off; 0.2~6.0	Off
P155	K curve for Zone 2 (OTC mode)	0: Off; 0.2~6.0	Off
P156	K curve for Zone 3 (OTC mode)	0: Off; 0.2~6.0	Off
P159	Zone 2 combined water flow temperature setpoint	0: Off; 10.0~P165ºC	Off
P201	SG Ready function activation	0: disable, 1: enable	OFF
P202	Recommended heating switch-on setpoint	OFF, 10°C~75°C	OFF
P203	Heating switch-on setpoint	OFF, 10°C~75°C	OFF
P204	Recommended cooling switch-on setpoint	OFF, 10°C~30°C	OFF
P205	Cooling switch-on setpoint	OFF, 10°C~30°C	OFF
P206	Recommended DHW switch-on setpoint	OFF, 10°C~70°C	OFF
P207	DHW switch-on setpoint	OFF, 10°C~70°C	OFF

Code	Definition	Range	Default value
P208	SG Ready function heating devices	0: Heat pump + E1/E2 1: E1/E2 2: Heat pump only	OFF

NOTE: Any settings not shown in the table are technical parameters set by default and must not be changed under any circumstances. Changing any these settings could cause malfunction and/or breakage of the heat pump.

13.2 Operating Status

On the sub-menu "Operating status", a descriptive diagram of the heat pump allows to **view** and check any time the status of all the heat pump's control and safety components and the values of some of the operating parameters.

Also, on the main "Operating Status" screen, you can press the ⓘ to access the heat pump's **C** parameters or Status parameters of the heat pump. The status parameters are display parameters, They are therefore not adjustable and their purpose is to diagnose the functioning of the appliance during maintenance and repair operations. Once in the menu, press ⇦ and ⇨ buttons to browse through the **C** parameters.

NOTE: The parameters labelled "Reserved" on the table do not apply to these heat pump models and are therefore not relevant.

Code.	Definition	Unit	Range
C00	Evaporator temperature sensor	°C	
C01	Discharge temperature sensor	°C	
C02	Outdoor temperature sensor	°C	
C03	Suction temperature	°C	
C04	Reserved		
C05	Reserved		
C06	Heat exchanger sensor temperature	°C	
C07	Return water temperature sensor	°C	
C08	Flow water temperature sensor	°C	
C09	DHW temperature sensor	°C	
C10	Water flow	l/min	
C11	Main temperature difference	°C	
C12	Reserved		
C13	High pressure	Mpa	
C14	Low pressure	Mpa	
C15	Compressor operating frequency	Hz	
C16	Fan 1 speed	rpm	
C17	Fan 2 speed	rpm	
C18	Expansion valve opening degrees	°	
C19	Reserved		
C20	Target compressor frequency	Hz	
C21	Compressor operating current	A	
C22	IPM module temperature	°C	
C23	Input voltage (AC)	V	
C24	IPM voltage (DC)	V	
C25	Reserved		
C26	Reserved		
C27	Evaporation temperature	°C	
C28	Condensation temperature	°C	
C29	**TAF** input	On/Off	On: Disconnected Off: Connected

Code.	Definition	Unit	Range
C30	**TAC** input	On/Off	On: Disconnected Off: Connected
C31	Anti-legionella function	Off/On	Off: Disconnected On: Connected
C32	Compressor overcurrent protection	Off/On	Off: Disconnected On: Connected
C33	Defrost	Off/On	Off: Disconnected On: Connected
C34	Heating anti-freeze	Off/On	Off: Disconnected On: Connected
C35	DHW anti-freeze	Off/On	Off: Disconnected On: Connected
C36	Compressor heating element	Off/On	Off: Disconnected On: Connected
C37	4-way valve	Off/On	Off: Cold On: Heat
C38	3-way valve G1	Off/On	Off: Heat/Cold On: DHW
C39	3-way valve G2	Off/On	Off: Cold On: Heat
C40	Backup energy for DHW E1	Off/On	Off: Disconnected On: Connected
C41	Heating backup energy E2	Off/On	Off: Disconnected On: Connected
C42	Main circulation pump C1	Off/On	Off: Disconnected On: Connected
C43	Circulation pump C2	Off/On	Off: Disconnected On: Connected
C44	Backup pump C3	Off/On	Off: Disconnected On: Connected
C45	Heating temperature setpoint	°C	
C46	Cooling temperature setpoint	°C	
C47	DHW setpoint temperature	°C	
C48	Anti-legionella temperature setpoint	°C	
C49	Lubricant return process	0/1	0: Disconnected 1: Connected
C50	Compressor run time	hours	
C51	Circulation pump C1 speed	0~100%	
C52	Heat pump operating mode	0/4	0: Standby 1: DHW 2: Heating 4: Cooling
C53	Reserved		
C54	Selected operating mode	0/5	0: Standby 1: DHW 2: Heating 3: DHW+Heating 4: Cooling 5: DHW + Cooling
C55	PCB software version	-	
C56	Software display version	-	
C57	Reserved		
C58	Reserved		
C59	Reserved		
C60	SG1 Input	0/1	0: Disabled 1: Enabled

Code.	Definition	Unit	Range
C61	SG2 Input	0/1	0: Disabled 1: Enabled
C62	Reserved		
C63	Reserved		
C64	Reserved		
C65	Reserved		
C66	Reserved		
C67	Reserved		
C68	Reserved		
C69	Reserved		
C70	Reserved		
C71	Reserved		
C72	Zone 1 room temperature	ºC	
C73	Zone 2 room temperature	ºC	
C74	Zone 3 room temperature	ºC	
C75	OTC outdoor temperature	ºC	
C76	Zone 2 combined water flow temperature	ºC	
C77	Reserved		
C78	Reserved		
C79	Software version of the **iConnect** module	-	
C80	Software version of the **CCDPB_AIR1** module	-	
C81	Software version of the **CCDPB_AIR2** module	-	
C82	Reserved		
C83	Reserved		

13.3 Pair Wireless Devices

This function will only be available when there is an **iConnect** communications module connected to the **DUAL CLIMA HT PRO** heat pump, as well as a **Receptor RF iC** radio module connected to the **Modbus** input (+A/-B) of the **iConnect** module (see *"Installation with wireless devices Confort iC and/or Sonda iC (Optional)"*.

This option enables pairing and unpairing the wireless devices with the **Receptor RF iC** radio module and linking it to the corresponding heating/cooling zone.

Enter the "Pair Wireless Dev." sub-menu, which will display the heating/cooling zones available in the installation and the outdoor temperature sensor. Take the following steps in the order shown to complete the pairing and unpairing process successfully:

1. To pair a wireless device, select the Zone to be linked to it by pressing the corresponding button ☐. The pairing process will be activated, indicated by the flashing , while the heat pump waits for pairing to be completed.

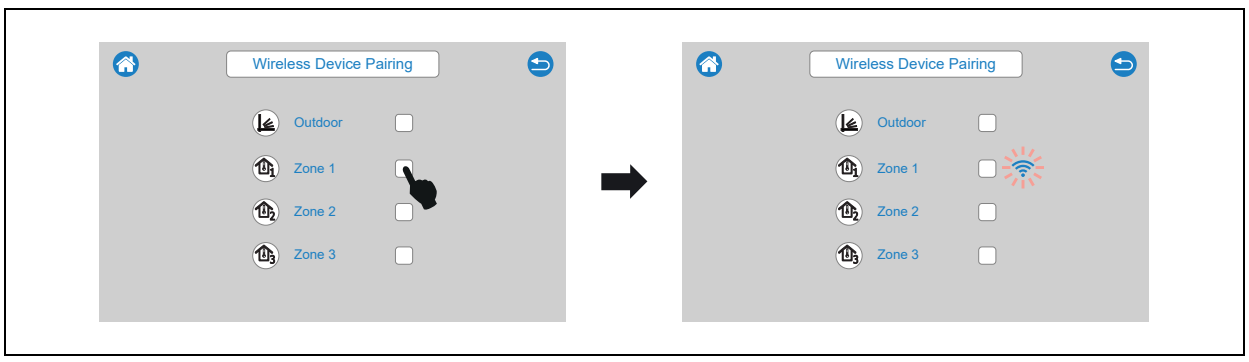

2. **Pairing** must be performed from the wireless device. Pairing will be carried out differently, depending on the type of wireless device (**Confort iC** or **Sonda iC**) (see the instruction manual provided with each device for further information):

- **Confort iC** remote control: Access the "**PAR**" option (**P03**) of the control panel user menu and press the center button on the device. The remote control will start the pairing process by trying to connect to the radio module for a maximum period of 4 minutes. If the connection is completed satisfactorily, "**End**" and "**Succ**" will be displayed on the control screen. Press the central button again to return to the main screen and wait for the symbols and to stop flashing and disappear (for no more than 2 minutes). The pairing process is now complete.
- **Sonda iC** temperature sensor: This wireless device is paired by pressing the button located at the rear of the device and waiting until the red led to its right stops flashing. When this occurs, the pairing process of the wireless sensor has been completed.

3. After completing the pairing process successfully, the control panel will display the activated zone button and the communication icon in green, indicating that the device is paires and correctly linked to the selected Zone.

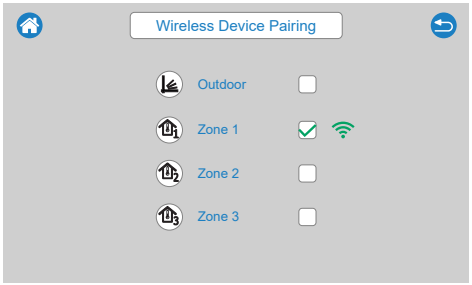

4. To **unpair** a wireless device, select the Zone that it was linked to by pressing the corresponding button . A confirmation screen will appear. After confirming the desire to unpair the device by pressing the button , the heat pump will unpair the selected device and display the inactive Zone button and the communication icon will be deleted. A physical wireless device is not required to unpair a device.

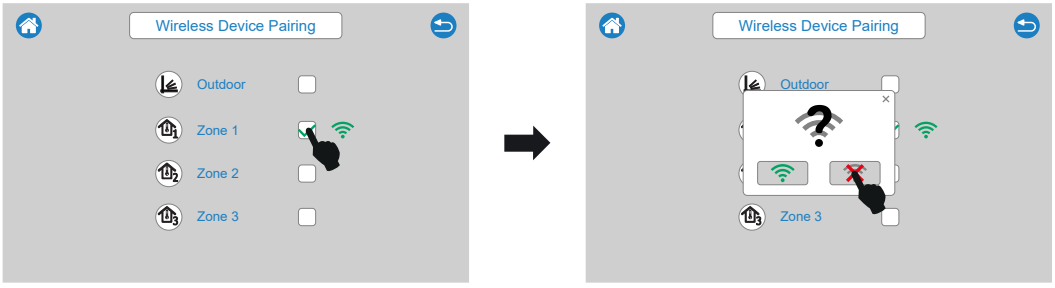

For further information about the installation and operation of the **Confort iC** remote control and the **Sonda iC** temperature sensor, carefully read the instructions provided with these devices.

14 SETTING UP THE HEATING/COOLING CIRCUITS

The **DUAL CLIMA HT PRO** heat pump is equipped with an electronic control unit capable of efficiently adjusting automatic operation of the heat pump. It also includes the following functions to control the heating/cooling circuits:

14.1 Operation of the circulation pump (P20)

The electronic control unit is used to select the operating mode of the heat pump's circulation pump (**C1**) via parameter **P20** in the "System parameters" menu. The following operating modes can be selected:

P20 = 0 => Continuous operation (default setting): the circulation pump will run whenever a Heating or Cooling operating mode has been selected, regardless of demand from the installation circuits.

P20 = 1 => Normal operation: the circulation pump will run as long as there is heating/cooling demand in any of the heating/cooling circuits in the installation. The circulation pump will shut down when the demand stops in all the circuits.

P20 = 2 => Periodic operation: the circulation pump will stop when there is no demand from any of the heating/cooling circuits and will start up every 15 minutes, during 1 minute, until demand is detected.

14.2 Zone 2 combined circuit temperature limit (P165)

The electronic control unit can be used to adjust the maximum temperature setpoint setting for the water flow in the Zone 2 combined circuit, connected to the heat pump through the optional **AIR Hydraulic Kit**. Parameter **P165** in the "System parameters" menu is used to adjust the maximum flow temperature. The range of parameter **P165** is 45 - 70ºC and the default factory setting is 45ºC (combined circuit for underfloor heating). This parameter must be adjusted by qualified staff; incorrect adjustment may result in damage to the installation and/or home.

IMPORTANT: DOMUSA TEKNIK shall not be held liable for damage and/or malfunctions affecting either the installation or the home, caused by incorrecting adjustment of this parameter setting.

14.3 Room device type (P150, P151, P152)

The **DUAL CLIMA HT PRO** heat pump can use 2 types of devices to manage the room temperature conditions of each heating/cooling zone it is connected to inside the home. Parameters **P150** (Zone 1), **P151** (Zone 2) and **P152** (Zone 3) of the "System parameters" menu **must be used** to select the type of device installed in each heating zone.

P150, P151 or P152 = 4 => Room temperature sensor.
P150, P151 or P152 = 5 => Room temperature thermostat.

If the user chooses to install a wireless room device in any of these Zones, it will not be necessary to adjust these parameters.

14.4 Room temperature hysterisis (P117, P118)

Parameters **P117** and **P118** are used to adjust the room temperature hysterisis needed to reactivate demand. This is the temperature drop required to reactivate heating demand once the desired room temperature is reached. Choosing this parameter setting appropriately will prevent unnecessary activation of heat pump heating/cooling demand and optimise its operation. The ideal setting will depend on the degree of thermal isolation in the home; the greater the insulation, the lower the setting required, and vice versa. These parameters are only applied to heating zones where a room device is connected. Parameter **P117** affects hysterisis in room heating mode and **P118** does the same for the cooling mode. The range of these parameters is 0.2 - 5ºC and the default factory setting is 0.5ºC.

14.5 Room temperature correction (P146, P147, P148)

These parameters are used to compensate differences in temperature readings in the connected room temperature sensors, regardless of type. The range of parameter **P146** (Zone 1), **P147** (Zone 2) and **P148** (Zone 3) is -5.0 - +5.0ºC and the default setting is 0.0ºC.

15 CONFIGURING THE AUXILIARY OR BACKUP ENERGY SOURCES (E1, E2)

The operating principle of **DUAL CLIMA HT PRO** heat pumps is to extract energy from the air outside the building and transmit it to the interior to heat or cool a water circuit for either heating/air conditioning and/or DHW production. The heating capacity of the heat pump will therefore directly depend on the amount of energy available in the air outside the building and consequently on the weather conditions (temperature and humidity) in the exterior environment.

As a result, in extremely cold weather conditions and/or if the heat pump is located in a geographical area with high humidity, it may require the aid of a backup or auxiliary energy source to achieve the desired comfort conditions. The **DUAL CLIMA HT PRO** heat pump is therefore equipped with 2 relay outputs (**E1**, **E2**) for connecting these auxiliary energy sources, which may be heating elements, a gas boiler, an oil-fired boiler, etc. or any combination of these. One of the two outputs is for backing up DHW production (**E1**), and the other is for backup in heating mode (**E2**).

The operating mode of these outputs, according to the external temperature conditions, can be configured via parameter **P81** of the System Parameters. There are 4 different operating modes to choose from.

The diagram below shows the energy sources available according to the external temperature and the operating mode selected for parameter **P81** of the System Parameters.

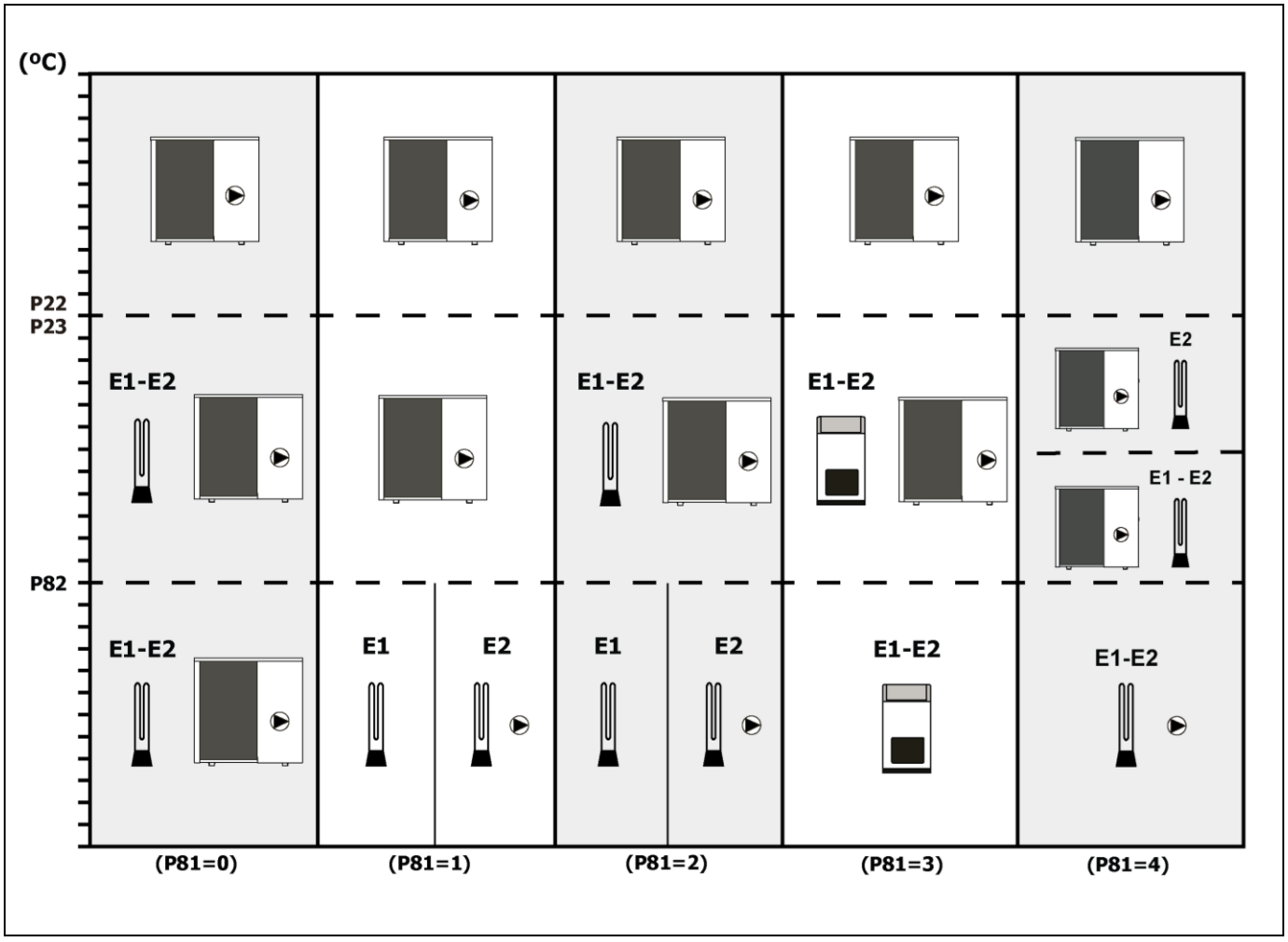

15.1 Backup source mode (P81 = 0)

In this operating mode, the auxiliary energy sources are activated when the external temperature falls below a value selected for parameters **P22** and **P23** of the System Parameters (see *Settings Menu*), to aid and complete the performance of the heat pump. The heat pump will continue running at the same time as the backup sources. This is the pre-set default operating mode.

The backup energy source for DHW (**E1**) is activated when the heat pump is running in DHW mode and the backup energy source for heating (**E2**) is activated when the heat pump is running in Heating mode.

Configuring the backup source for DHW (E1)

When the heat pump is running in DHW mode, the energy source connected to output **E1** will be enabled if the external temperature falls below the value selected for parameter **P23** and the heat pump is not able to reach the set DHW production conditions. When the backup energy source is activated, both the heat pump and the backup source will run simultaneously to achieve the desired performance.

The selectable range of values for parameter **P23** is -30 ~ +20 ºC. The pre-set default value is 0ºC. This setting can be increased or decreased by entering the desired value on the drop-down sub-menu.

Configuring the backup source for Heating (E2)

When the heat pump is running in Heating mode, the energy source connected to output **E2** will be enabled if the external temperature falls below the value selected for parameter **P22** and the heat pump is not able to reach the set heating conditions. When the backup energy source is activated, both the heat pump and the backup source will run simultaneously to achieve the desired performance.

The selectable range of values for parameter **P22** is -30 ~ +20 ºC. The pre-set default value is 0ºC. This setting can be increased or decreased by entering the desired value on the drop-down sub-menu.

15.2 Auxiliary source mode (P81 = 1)

In this operating mode, the backup energy source for Heating (**E2**) becomes an alternative source to the heat pump ("auxiliary source"). It is activated when the external temperature falls below the value selected for parameter **P82** of the System Parameters (see *Settings Menu*). The heat pump will then switch off (Standby mode), leaving auxiliary sources **E1** and **E2** as the sole heat source for the system.

The domestic hot water (DHW) backup power source **(E1)** is activated when the heat pump is operating in DHW mode, and the heating backup power source **(E2)** is activated when the heat pump is operating in heating mode.

The selectable range of values for parameter **P82** is -30 ~ +20 ºC. The pre-set default value is -15ºC. This setting can be increased or decreased by entering the desired value on the drop-down sub-menu.

15.3 Passive combined mode (P81 = 2)

This operating mode is optimised for installations that combine the "Backup source mode" and the "Auxiliary source mode", using passive auxiliary energy sources that do not generate primary water circulation such as an electric element, a heat exchanger, etc.

When the external temperature falls below the value selected for parameters **P22** and **P23** of the System Parameters, the auxiliary energy sources are activated in combination with the heat pump, as described in the section *"Backup source mode"*.

If the external temperature falls below the value selected for parameter **P82** of the System Parameters, the heat pump will switch off (Standby), leaving the auxiliary sources **E2** and **E1** as the only heat source in the installation, as described in the section *"Auxiliary source mode"*.

NOTE: Whenever a backup or auxiliary energy source (E2) is activated, the heat pump's circulation pump (C1) is also activated.

15.4 Active combined mode (P82 = 3)

This operating mode is optimised for installations that combine the "Backup source mode" and the "Auxiliary source mode", using active auxiliary energy sources that do not generate primary water circulation, such as a boiler.

When the external temperature falls below the value selected for parameters **P22** and **P23** of the System Parameters, the auxiliary energy sources are activated in combination with the heat pump, as described in the section *"Backup source mode"*.

If the external temperature falls below the value selected for parameter **P82** of the System Parameters, the heat pump will switch off (Standby), leaving the auxiliary source **E2** and **E1** as the only heat source in the installation, as described in the section *"Auxiliary source mode"*.

NOTE: The heat pump's CIRCULATION PUMP (C1) WILL NOT BE ACTIVATED in "Auxiliary source mode", and it is therefore essential for the auxiliary energy source to have its own circulation pump.

15.5 Combined Stage Modepas (P81 = 4)

This operating mode is optimized for installations that utilize passive auxiliary energy sources that operate in stages and do not generate primary water circulation, such as a staged electric resistance heater.

Heating Mode Operation

In heating mode, when the outdoor temperature drops below the value selected by parameter **P22** in the System Parameters, auxiliary energy source **E2** will activate in conjunction with the heat pump.

Furthermore, once the outdoor temperature drops below the average value between parameters **P22** and **P82** in the System Parameters, auxiliary energy sources **E2** and **E1** will activate in conjunction with the heat pump.

If the outdoor temperature falls below the value selected by parameter **P82** in the System Parameters, the heat pump will switch off (Standby), leaving auxiliary energy sources **E2** and **E1** as the sole heat source for the installation.

Domestic Hot Water (DHW) Operation

In DHW mode, when the outdoor temperature drops below the value selected using parameter P23 in the System Parameters, the auxiliary energy source E1 will activate in conjunction with the heat pump.

If the outdoor temperature falls below the value selected in parameter P82 of the System Parameters, the heat pump will switch off (Standby), leaving the auxiliary energy source E1 as the sole heat source for the system.

NOTE: Whenever an auxiliary energy source (E2 or E1) is activated, the heat pump's circulation pump (C1) is also activated.

16 START-UP

16.1 Prior warnings

Repair and maintenance of the heat pump must be carried out by a qualified professional authorised by **DOMUSA TEKNIK**. For optimum functioning and conservation of the heat pump, it should be serviced annually.

Please carefully read this instruction manual and keep it in a safe, easily accessible place. **DOMUSA TEKNIK** will not be liable for any damages caused by failure to follow these instructions.

Before any servicing, **disconnect the heat pump from the mains**.

16.2 Start-up

In order for the **guarantee to be valid**, the heat pump must be started up by **personnel authorised by DOMUSA TEKNIK**. Before beginning the start-up process, the following must be complied with:

- The heat pump must be plugged in to the mains and the correct electrical supply must be used.
- The installation must be filled with water (the pressure must be between 1 and 1.5 bar) and correctly air bled.
- If the installation has flow and return valves, check they are open.

The start-up process must include the following steps, at least:

- Check that the heat pump configuration is correct and corresponds to the Heating, Cooling and/or DHW modes permitted for the installation.
- Check that all the technical parameters on the Settings Menu have been correctly set and adjust them if necessary.
- Check that the heat pump and internal piping system have not been damaged during transport.
- Check that the fan can move freely.
- Check that all the pipes are correctly insulated, particularly in the case of installations that can be used in Cooling mode.

16.3 Installation handover

After the initial start-up, the Technical Assistance Service will explain to the user how the heat pump functions, making any observations they consider relevant.

The installer is responsible for clearly explaining to the user the functioning of any control or regulation device forming part of the installation but not supplied with the heat pump.

17 MAINTENANCE

To maintain the heat pump in perfect working order, a yearly overhaul should be performed by **DOMUSA TEKNIK**'s authorised personnel. Among other maintenance work, the following must be carried out at least once a year:

- Check that the supply, consumption, and electrical system are all correct.
- Check that the water installation, the safety valves and the installation control devices are all working correctly.
- Check that the water circulation pump is working correctly. Make sure there are no leaks or obstructions in the water pipes and pipe accessories.
- Clean any dirt from the evaporator.
- Check that the various components of the gas circuit are functioning correctly. Inspect the pipe joints and make sure the valves are correctly oiled.
- Chemically clean the plate heat exchanger every 3 years.
- Check that the refrigerant gas content is correct.
- Check that the refrigerant gas leak safety systems are functioning correctly and are not obstructed.

18 RECYCLING AND DISPOSAL

Removal

This product must be removed by personnel authorised to handle fluorinated gases.

The heat pump contains R290 refrigerant. Any leakage of refrigerant into the atmosphere must be avoided.

Recycling

Take the heat pump to a waste collection point for recycling or disposal. Contact qualified personnel for the handling of fluorinated gases. Contact the installer or the local authority for more information.

Disposal

Do not attempt to remove this product on your own.

Its removal and the treatment of the refrigerant, oil and other components must be carried out in accordance with local and national legislation. The entire unit, including the refrigerant gas, the compressor, and the oil it contains, must be taken to a waste collection point as it could contain refrigerant residue.

All the refrigerants must be removed and returned to the manufacturer for recycling or disposal.

IMPORTANT: The refrigerant gas contained in the heat pump is highly flammable and can cause damage to persons or property.

19 DIAGRAMS AND MEASUREMENTS

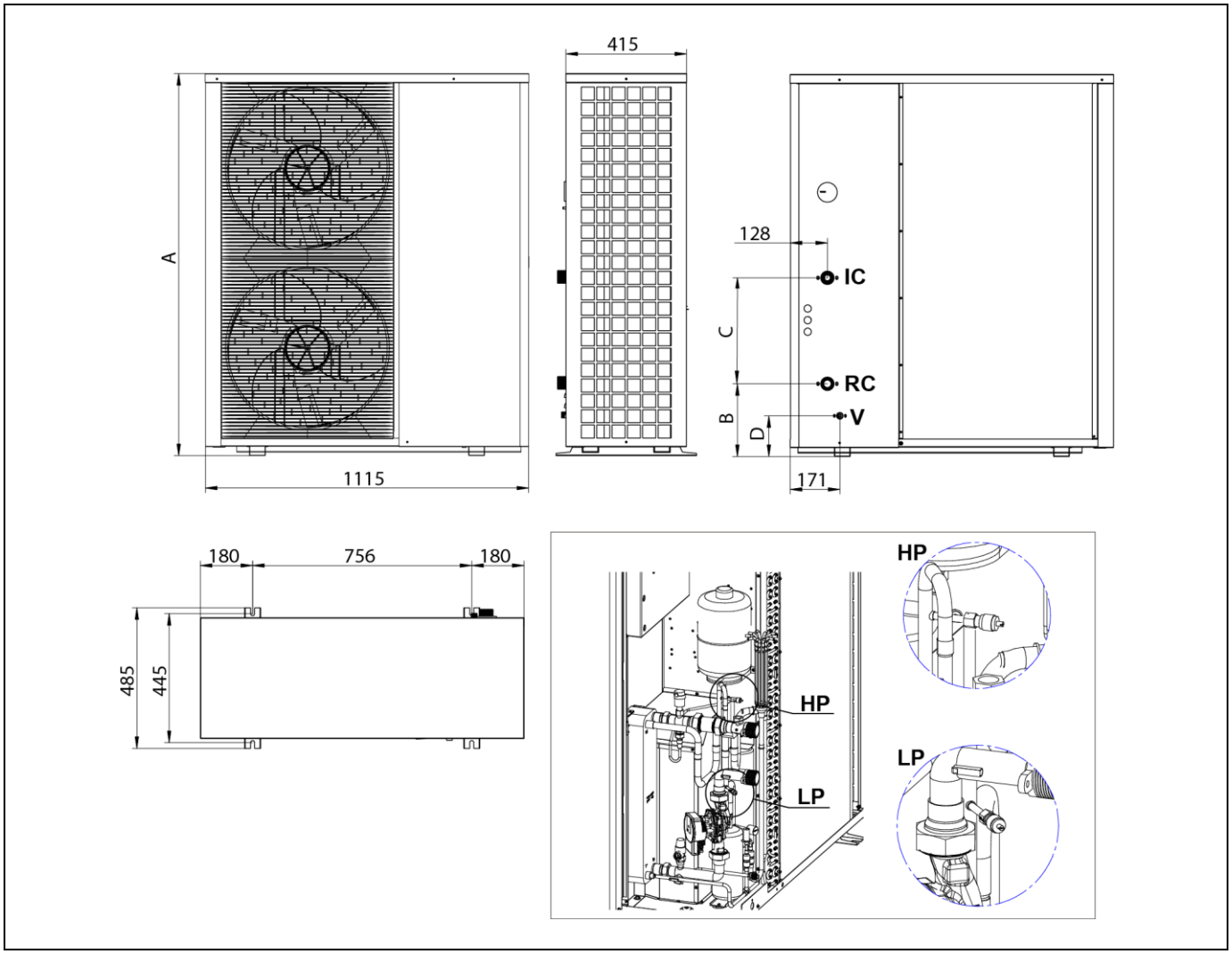

	DUAL CLIMA 6HT PRO	DUAL CLIMA 9HT PRO	DUAL CLIMA 12HT/HTT PRO	DUAL CLIMA 16HT/HTT PRO	DUAL CLIMA 19HT/HTT PRO	DUAL CLIMA 22HTT PRO
A (mm)	900			1320		
B (mm)	140				466	
C (mm)	279		476		150	
D (mm)	62				144	
IC: Heating/Air Conditioning Flow	1″			1-1/4″		
RC: Heating/Air Conditioning Return	1″			1-1/4″		
V: Water circuit draining	1/2"					
HP: Gas circuit High Pressure port	1/4" SAE					
LP: Gas circuit Low Pressure port	1/4" SAE					

20 ELECTRICAL DIAGRAMS

20.1 Nomenclature

Gas circuit components:

MC: Compressor motor.

RC: Compressor heating element.

I: Inductance.

MV: Fan motor.

EEV: Electronic expansion valve.

V4V: 4-way valve.

LS: Low pressure sensor.

HS: High pressure sensor.

T1: Discharge temperature sensor.

T2: Room sensor..

T3: Evaporator temperature sensor.

T4: External temperature sensor.

T5: Suction temperature sensor.

T6: 5KΩ element.

T11: Return temperature sensor.

T12: Flow temperature sensor.

T13: DHW temperature sensor.

T16: Internal heat exchanger temperature sensor.

Water circuit power supply and components:

L: Phase.

N: Neutral.

Q: Flow meter.

SW4: DIP-Switch 4.

SW3: DIP-Switch 3.

HMI: Control panel.

COMM2: **iConnect** Module.

Component terminal strip:

E1: DHW backup element.

E2: Heating backup element.

C1: Heat pump circulation pump.

C2: Heating/cooling backup circulation pump.

C3: DHW backup circulation pump.

TAF: Cooling room thermostat.

TAC: Heating room thermostat.

G1: 3-way Heating/DHW valve.

G2: 3-way Heat/Cold valve.

SG1: Contact 1 for SG Ready function.

SG2: Contact 2 for SG Ready function.

20.2 Dual Clima 6HT PRO

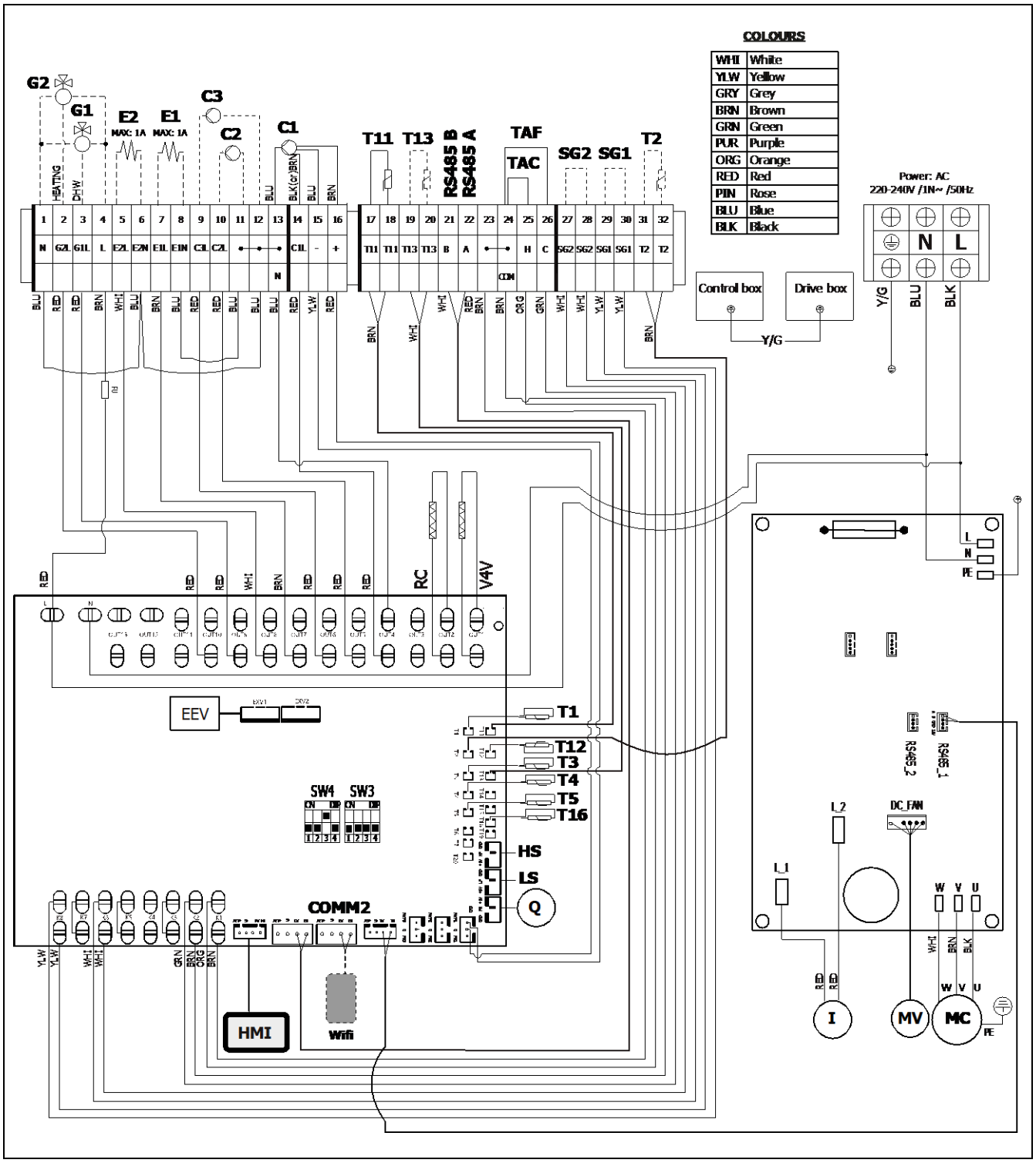

20.3 Dual Clima 9HT PRO

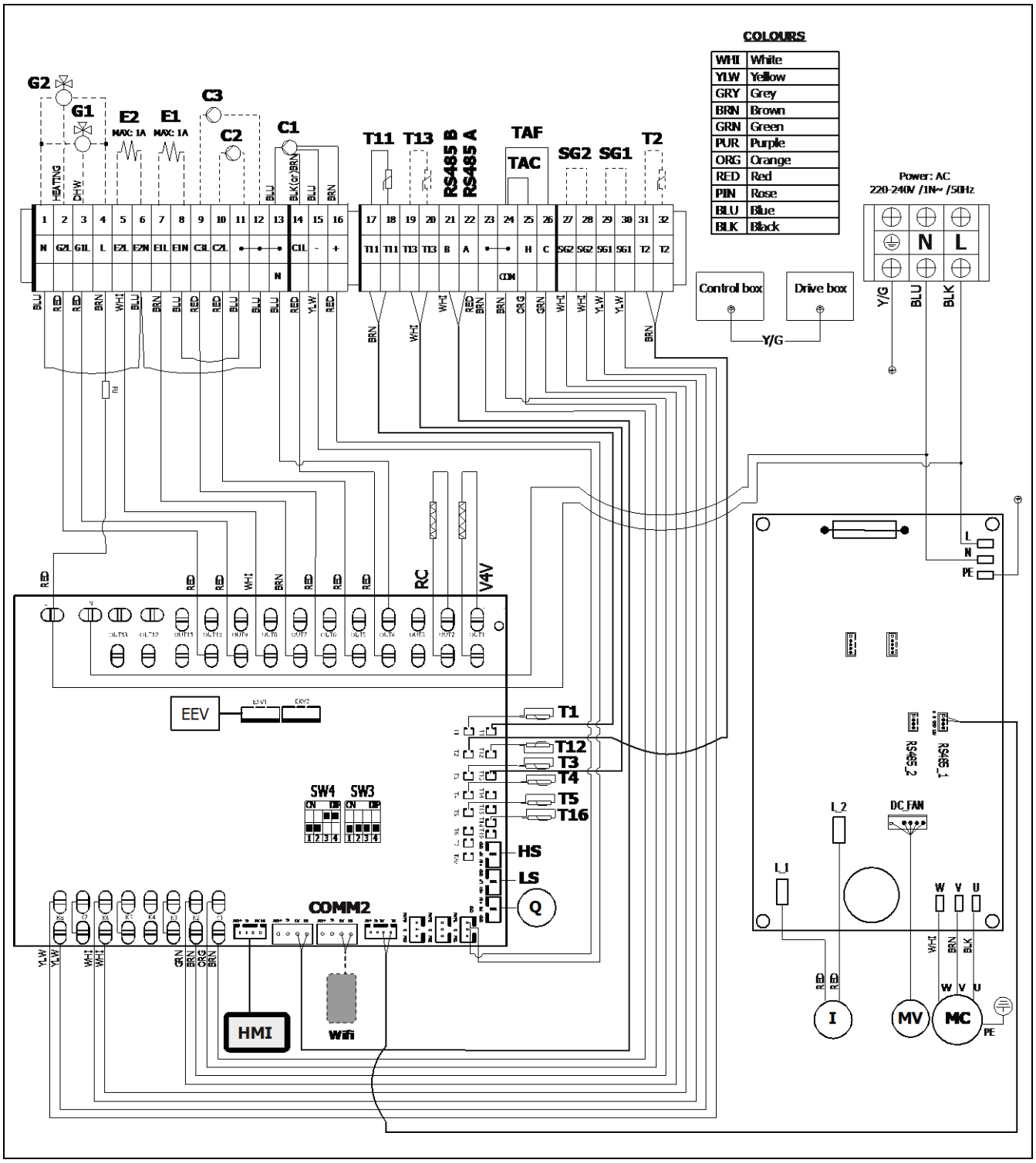

20.4 Dual Clima 12HT PRO

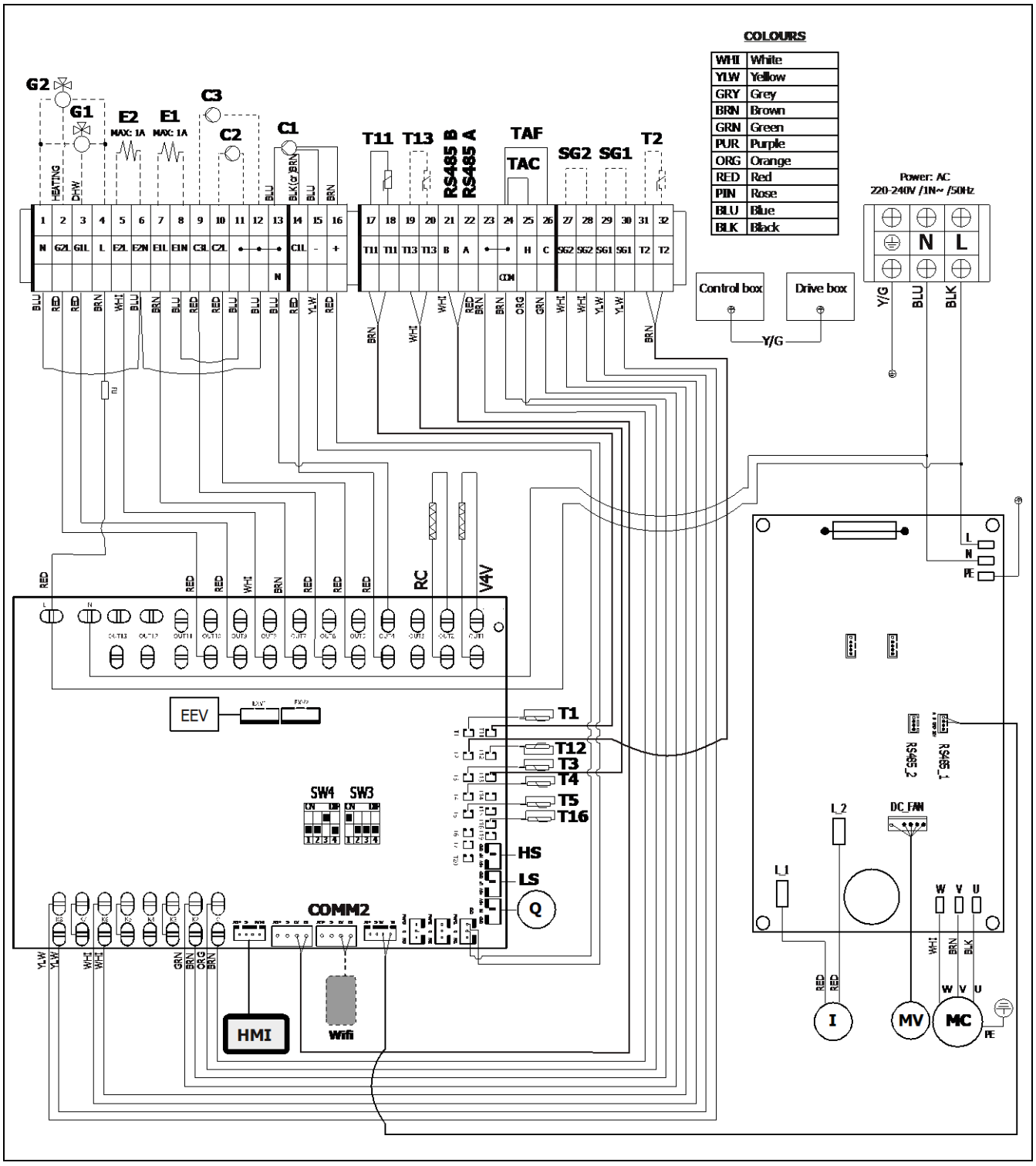

20.5 Dual Clima 16HT PRO

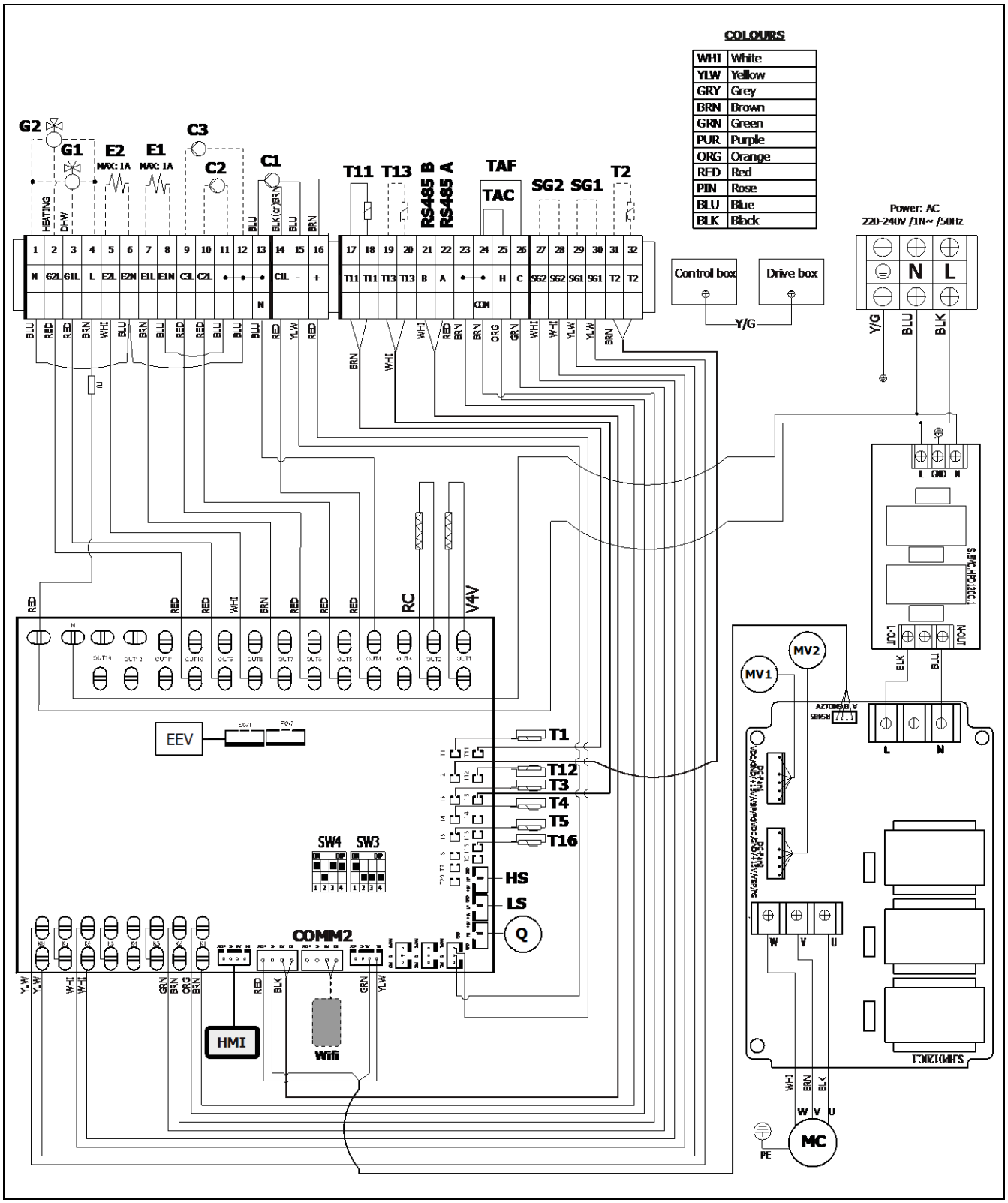

20.6 Dual Clima 19HT PRO

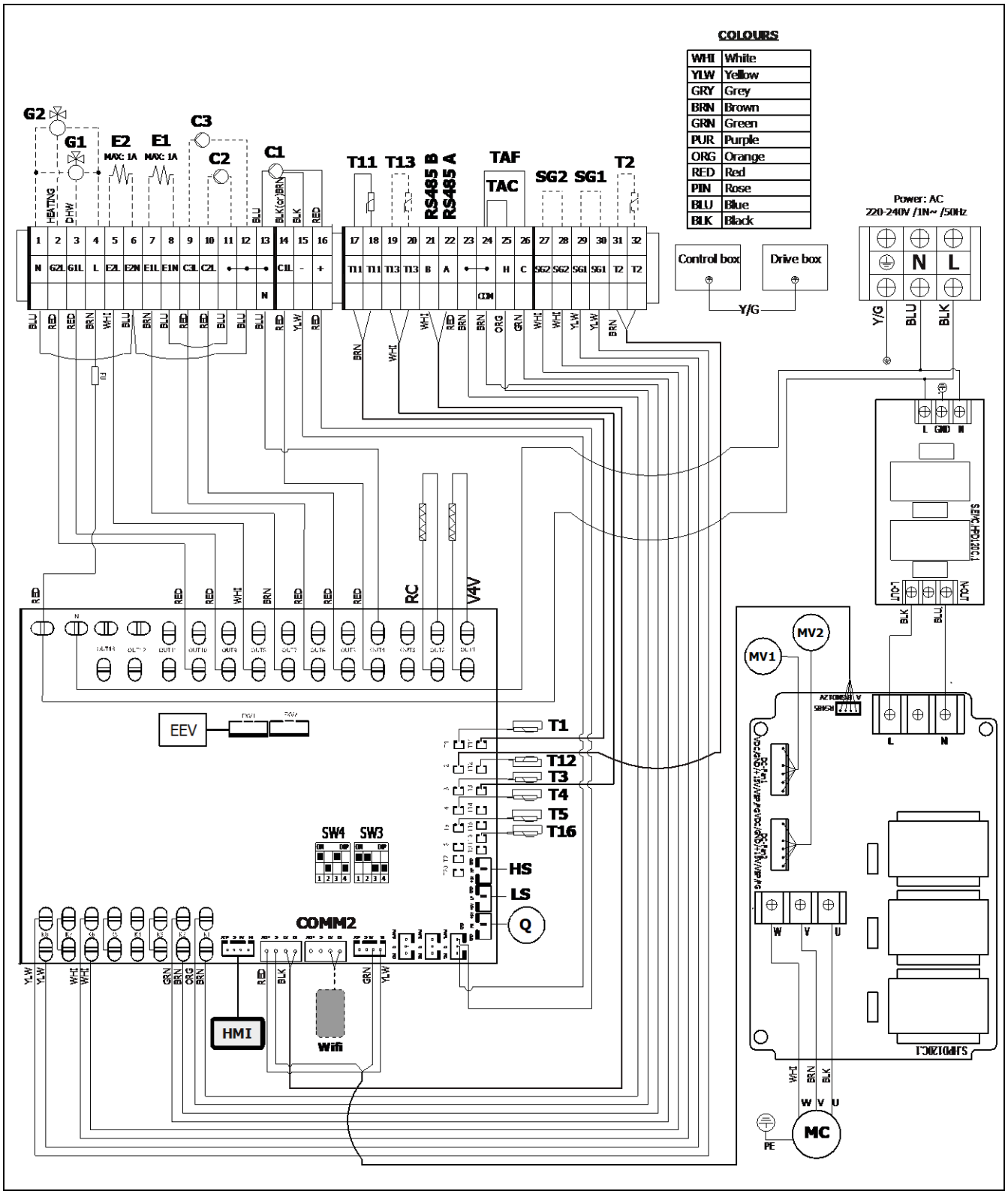

20.7 Dual Clima 12HTT PRO

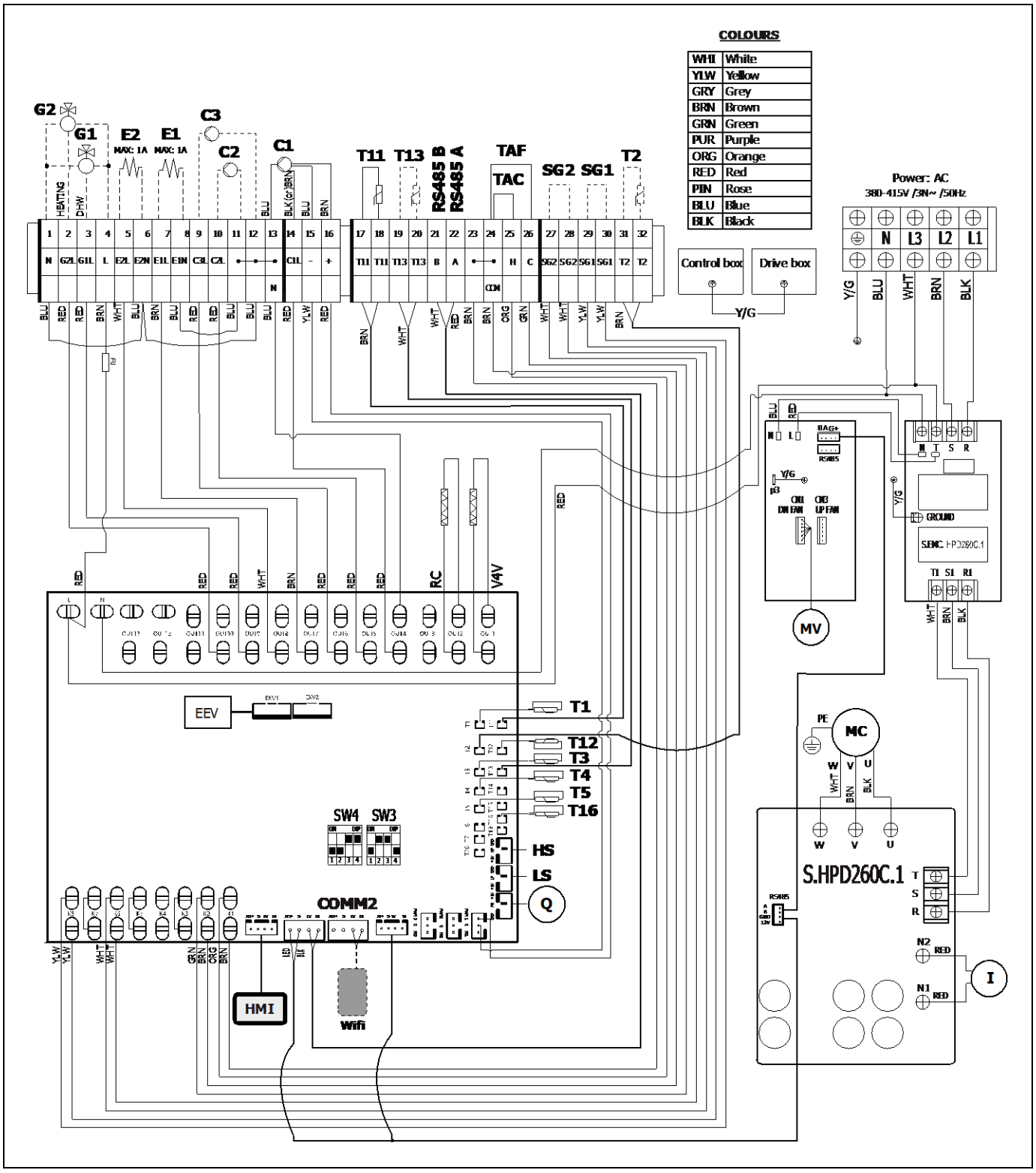

20.8 Dual Clima 16HTT PRO

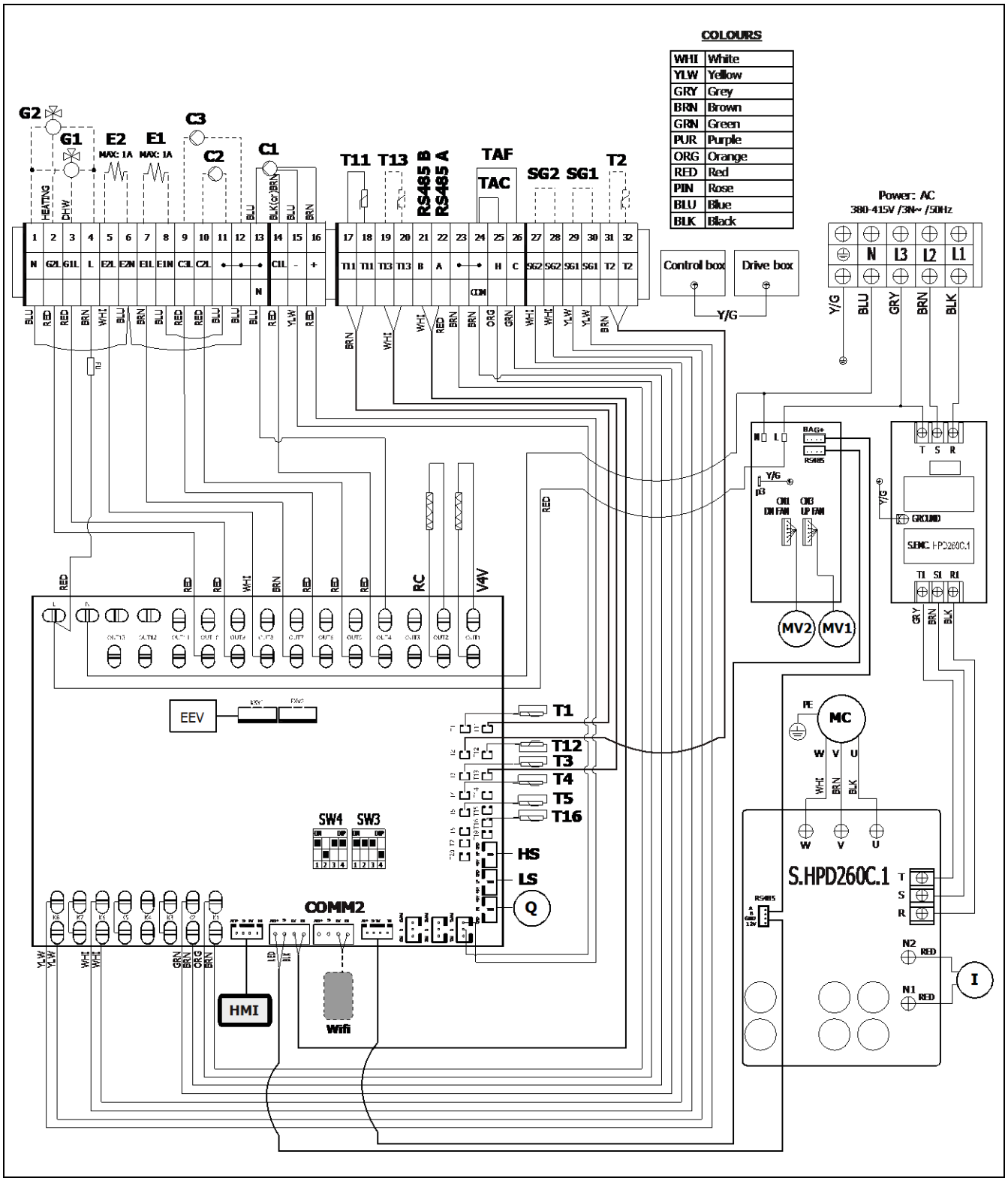

20.9 Dual Clima 19HTT PRO

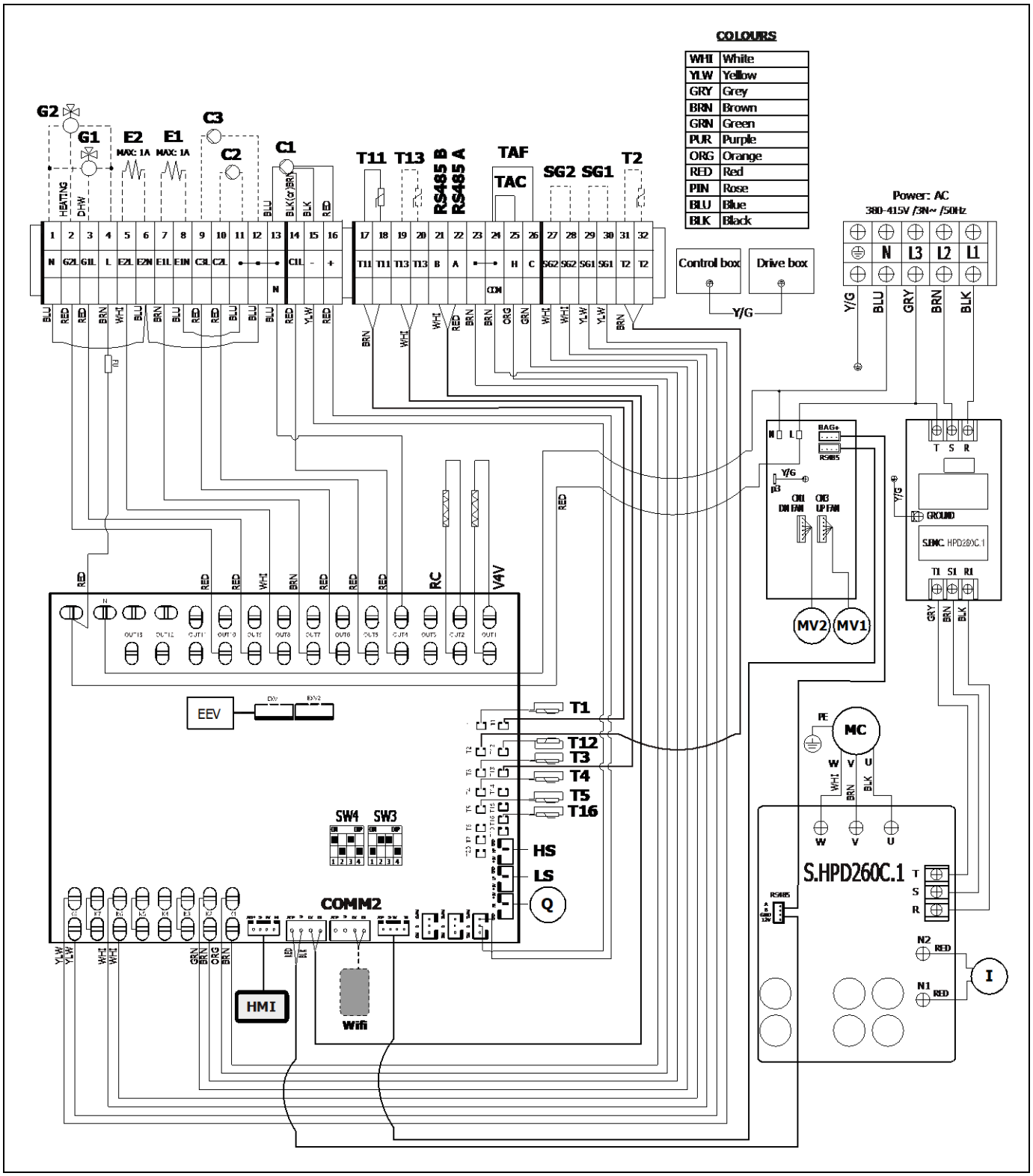

20.10 Dual Clima 22HTT PRO

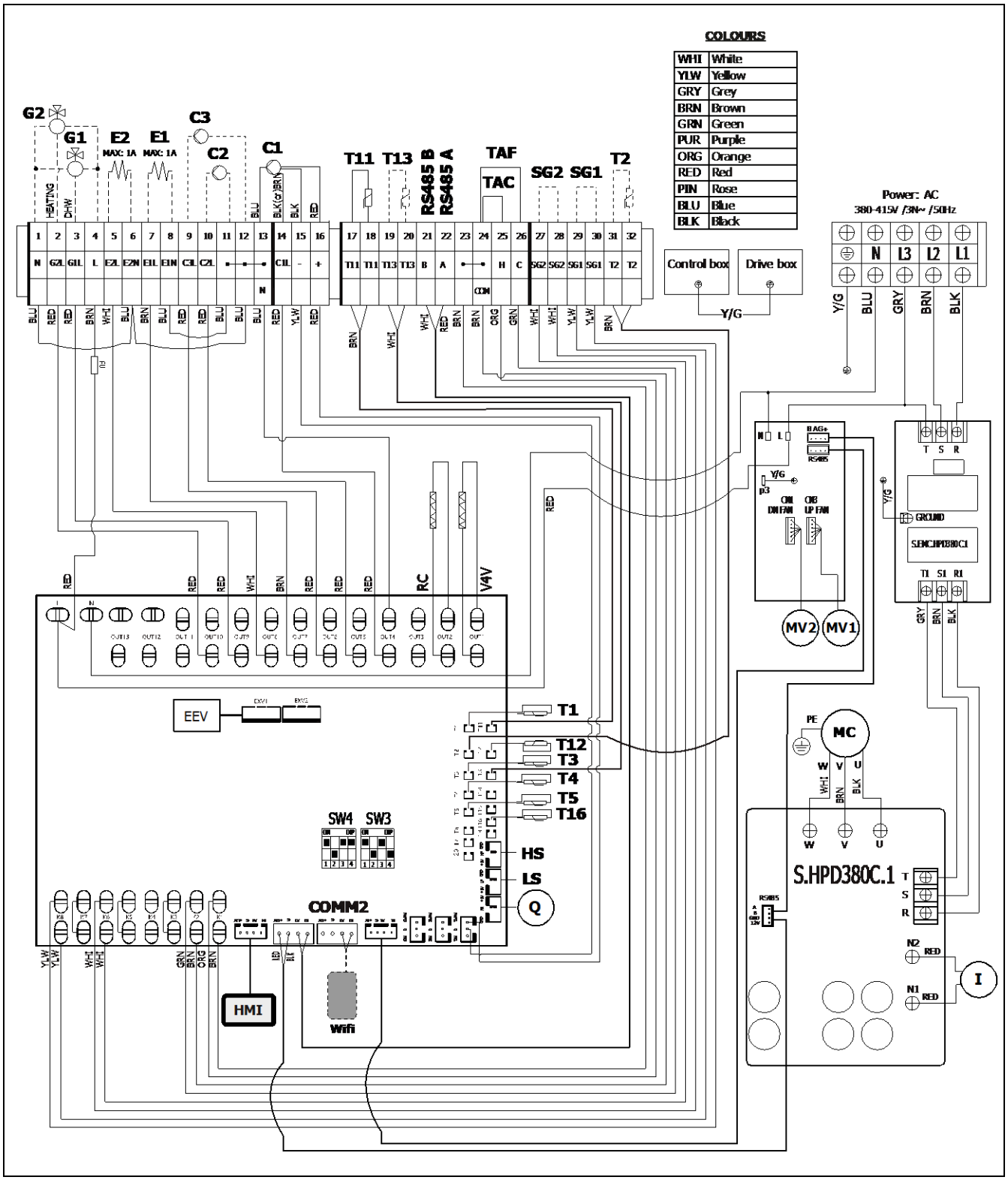

21 TECHNICAL CHARACTERISTICS

MODELO		DUAL CLIMA 6HT PRO	DUAL CLIMA 9HT PRO	DUAL CLIMA 12HT PRO	DUAL CLIMA 16HT PRO	DUAL CLIMA 19HT PRO
Type	-	Air/water				
Rated heating capacity	kW	6,19	9,4	12,60	16,84	19,52
Rated heating consumption	kW	1,285	1,981	2,72	3,62	4,302
Rated heating current	A	5,58	8,61	11,82	15,73	18,7
COP (Air +7ºC, Water 35ºC)	-	4,81	4,74	4,63	4,65	4,54
Rated cooling capacity	kW	6,23	9,12	11,8	15,09	18,62
Rated cooling consumption	kW	1,125	1,774	2,612	3,586	4,432
Rated cooling current	A	4,89	7,71	11,35	15,59	19,26
EER (Air +35 ºC, Water 18 ºC)	-	5,54	5,14	4,52	4,21	4,20
Maximum consumption	kW	2,76	3,15	3,75	6,21	7,00
Maximum current	A	12,0	13,7	17,0	27,0	30,4
Electrical supply	-	230 V~ / 50 Hz				
Max. working pressure: (water circuit)	MPa (bar)	0,3 (3)				
Max. water temperature	ºC	75				
Nominal water flow	m^3/h	1,10	1,57	2,10	2,75	3,27
Max. working pressure: (refrigerant circuit)	MPa	3,2				
Min. working pressure: (refrigerant circuit)	MPa	0,03				
Refrigerant	-	R290				
Refrigerant amount	Kg	0,8	0,85	1,2	1,4	1,9
Protection degree	-	IPX4				
Working temperature range (Heating)	ºC	-25/45				
Working temperature range (Cooling)	ºC	10/45				
Sound pressure level (1m)	dB(A)	44	44	44	47	47
Rated fan input power	W	85	85	85	170	
Dimensions: (Width/Depth/Height)	mm	1115/415/900			1115/415/1320	
Net weight	Kg	80	82	125	140	146

MODELO		DUAL CLIMA 12HTT PRO	DUAL CLIMA 16HTT PRO	DUAL CLIMA 19HTT PRO	DUAL CLIMA 22HTT PRO
Type	-	Air/water			
Rated heating capacity	kW	12,6	16,84	19,52	22,66
Rated heating consumption	kW	2,72	3,62	4,3	5,021
Rated heating current	A	4,13	5,50	6,53	7,62
COP (Air +7ºC, Water 35ºC)	-	4,63	4,65	4,54	4,51
Rated cooling capacity	kW	11,8	15,09	18,62	21,02
Rated cooling consumption	kW	2,61	3,59	4,43	5,213
Rated cooling current	A	3,96	5,45	6,73	7,92
EER (Air +35 ºC, Water 18 ºC)	-	3,97	4,21	4,2	4,03
Maximum consumption	kW	3,75	6,21	7,40	8,00
Maximum current	A	5,70	9,4	11,2	12,2
Electrical supply	-	400 V 3N~ / 50 Hz			
Max. working pressure: (water circuit)	MPa (bar)	0,3 (3)			
Max. water temperature	ºC	75			
Nominal water flow	m^3/h	2,10	2,75	3,27	3,75
Max. working pressure: (refrigerant circuit)	MPa	3,2			
Min. working pressure: (refrigerant circuit)	MPa	0,03			
Refrigerant	-	R290			
Refrigerant amount	Kg	1,2	1,4	1,9	2,0
Protection degree	-	IPX4			
Working temperature range (Heating)	ºC	-25/45			
Working temperature range (Cooling)	ºC	10/45			
Sound pressure level (1m)	dB(A)	44	47	47	47
Rated fan input power	W	170			
Dimensions: (Width/Depth/Height)	mm	1115/415/ 900	1115/415/1320		
Net weight	Kg	125	140	146	153

22 CIRCULATION PUMP CHARACTERISTICS

The graphs below can be used to calculate the hydromotive pressure available in the installation at the heat pump output, taking into account the pump operating curve and the pressure drop of each **DUAL CLIMA HT PRO** heat pump model.

22.1 Circulation pump flow curves

The graphs below show the hydromotive pressure that can be reached by each **DUAL CLIMA HT PRO** model water circulation pump, according to the installation flow:

Dual Clima 6HT PRO and Dual Clima 9HT PRO

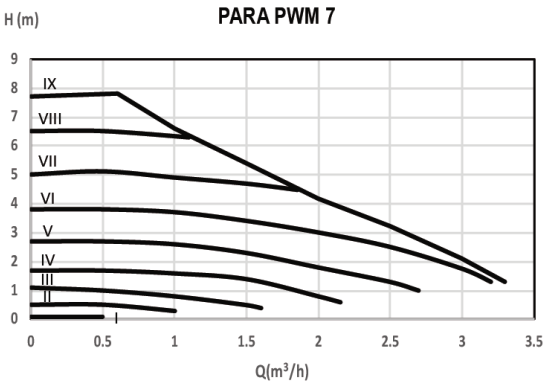

Dual Clima 12HT PRO and Dual Clima 12HTT PRO

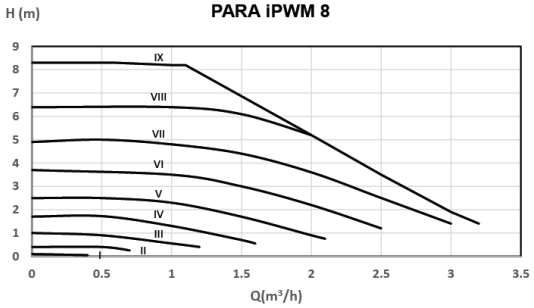

Dual Clima 16HT PRO and Dual Clima 16HTT PRO

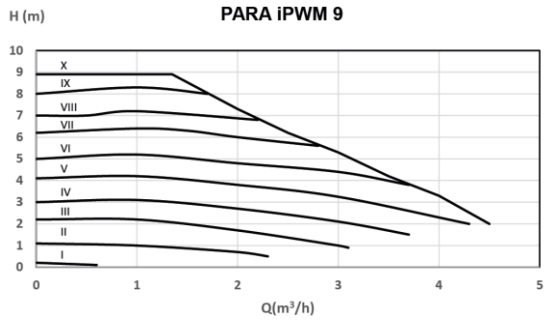

Dual Clima 19HT PRO, Dual Clima 19HTT PRO y Dual Clima 22HTT PRO

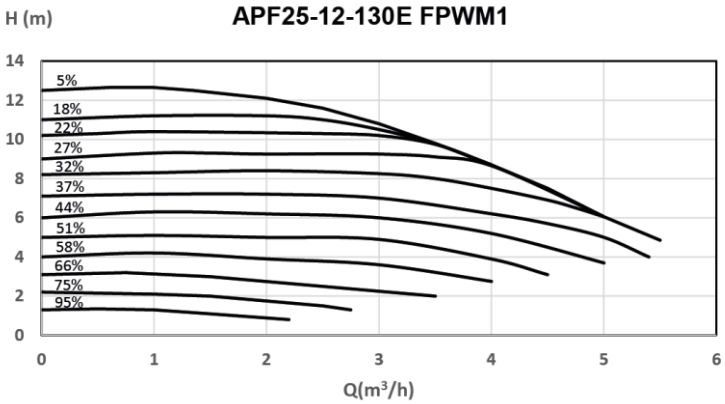

22.2 Heat pump pressure drop

The graph below shows the pressure drop generated by the internal hydraulic circuit of each **DUAL CLIMA HT PRO**, model, according to the installation flow:

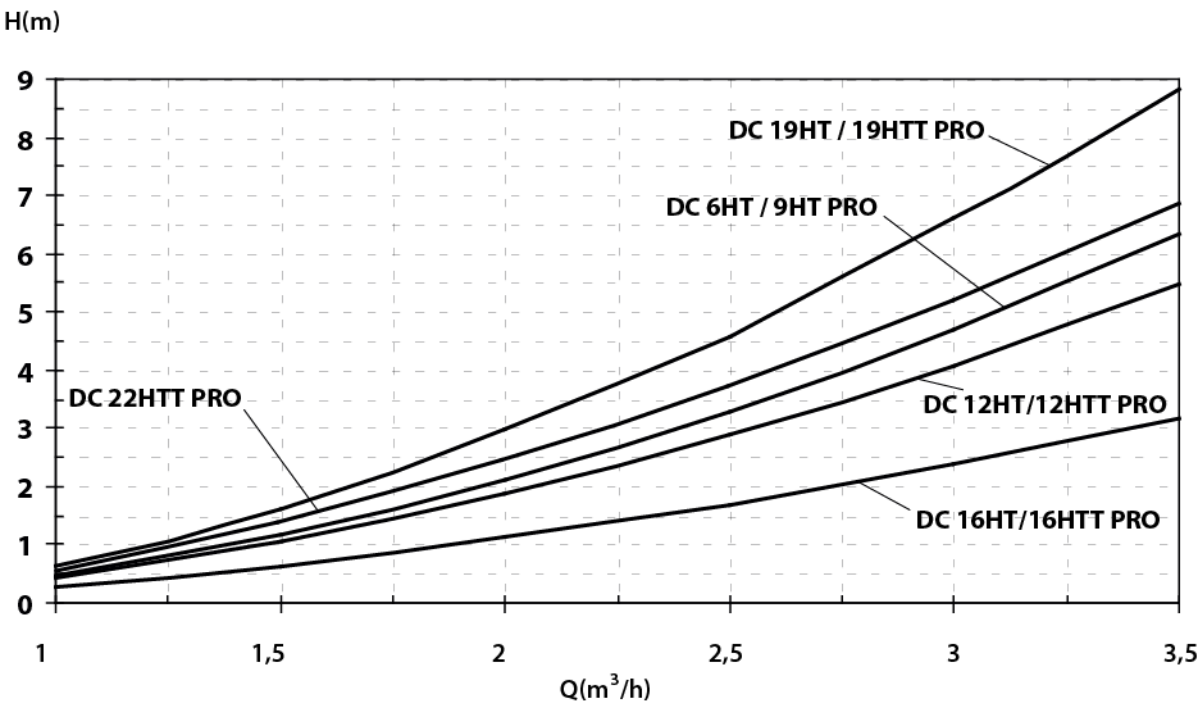

22.3 Circulation pump adjustment

The **DUAL CLIMA HT PRO** circulation pump (**C1**) can be speed-adjusted. This is done by adjusting parameters **P59** of the System Parameters (see *Settings Menu*). By default, the heat pump parameter **P59** is set to 8 (80%), and the circulation pump speed can therefore be adjusted between 80% and 100% of its capacity. To change this operating range, adjust parameter **P59** which determines the minimum speed the circulation pump can run at (**C1**).

23 ALARM CODES

The **DUAL CLIMA HT PRO** boiler is equipped with an electronic control that performs continuous self-testing to detect any pump malfunctioning. When the electronic control detects an operating error, this is indicated by an alarm code and an alarm indicator light (⚠) on the main control panel display.

On the "*Settings Menu*" (**9**), on the "Operating Status" sub-menu, press the touch button ⚠ to access the alarm code menu displaying 7 last operating failures detected by the heat pump, in chronological order. To exit the menu and return to the start screen, press the touch button 🏠. The table below lists the possible alarm codes:

When an alarm is activated, the Reset button will appear next to the alarm log icon ⚠. in the "Operating status" sub-menu. Once the cause of the alarm is corrected, press the "Reset" button to restore heat pump operation. The following list shows the alarm codes that can appear:

Code	Alarm	Description
E01	External temperature sensor failure.	Open circuit or short circuit in the external temperature sensor. Contact your nearest official Technical Assistance Service to have it replaced.
E02	External heat exchanger temperature sensor failure.	Open circuit or short circuit in the external heat exchanger temperature sensor. Contact your nearest official Technical Assistance Service to have it replaced.
E03	Suction temperature sensor failure.	Open circuit or short circuit in the suction temperature sensor. Contact your nearest official Technical Assistance Service to have it replaced.
E04	Heat pump settings incorrect.	Check the control card SW1's and all the Settings Menu parameters. Contact your nearest official Technical Assistance Service to have it replaced.
E05	Heat pump settings incorrect.	Check the control card SW1's and all the Settings Menu parameters. Contact your nearest official Technical Assistance Service to have it replaced.
E06	Discharge temperature sensor failure.	Open circuit or short circuit in the discharge temperature sensor. Contact your nearest official Technical Assistance Service to have it replaced.
E07	DHW temperature sensor failure.	Open circuit or short circuit in the DHW temperature sensor. Contact your nearest official Technical Assistance Service to have it replaced.
E08	Flow temperature sensor failure.	Open circuit or short circuit in the flow temperature sensor. Contact your nearest official Technical Assistance Service to have it replaced.
E09	Return temperature sensor failure.	Open circuit or short circuit in the return temperature sensor. Contact your nearest official Technical Assistance Service to have it replaced.
E10	Internal heat exchanger temperature sensor failure.	Open circuit or short circuit in the internal heat exchanger temperature sensor. Contact your nearest official Technical Assistance Service to have it replaced.
E11	High pressure sensor failure.	Open circuit or short circuit in the flow temperature sensor. Contact your nearest official Technical Assistance Service to have it replaced.

Code	Alarm	Description
E12	Low pressure sensor failure.	Open circuit or short circuit in the low pressure temperature sensor. Contact your nearest official Technical Assistance Service to have it replaced.
E13	High pressure protection.	High pressure safety device triggered. Disconnect the heat pump from the mains and connect it again. If this alarm persists or occurs repeatedly, contact the nearest Official Technical Assistance service.
E14	Low pressure protection.	Low pressure safety device triggered. Disconnect the heat pump from the mains and connect it again. If this alarm persists or occurs repeatedly, contact the nearest Official Technical Assistance service.
E15	Insufficient water flow.	The appliance flow meter is detecting a water flow lower than the minimum permitted for each heat pump model (see *"Hydraulic installation"*). Disconnect the heat pump from the mains and connect it again. If this alarm persists or occurs repeatedly, contact the nearest Official Technical Assistance service.
E16	Communication error.	Communication error between the PCB card and the display. Check the electrical connections. Disconnect the heat pump from the mains and connect it again. If this alarm persists or occurs repeatedly, contact the nearest Official Technical Assistance service.
E17	Compressor gas discharge temperature too high.	The compressor discharge temperature safety device has been triggered. Contact your nearest official technical assistance service.
E18	Heat pump settings incorrect.	Check the control card SW1's and all the Settings Menu parameters. Contact your nearest official Technical Assistance Service to have it replaced.
E20	IPM or compressor error.	The compressor or IPM has an operational problem. See E20 alarm code details. Check the installation then disconnect the heat pump from the mains and connect it again. If this alarm persists or occurs repeatedly, contact the nearest Official Technical Assistance service.
E20-1	Overcurrent in IPM.	The electric current in the IPM is too high. Contact your nearest official Technical Assistance Service.
E20-4	Failure in the power supply to the compressor.	The power supply from the IPM to the compressor is not correct. Check the wiring and if the alarm persists or repeats, contact the nearest Official Technical Assistance Service.
E20-5	Compressor failure.	The compressor is not working correctly. Check the wiring. If this alarm persists or occurs repeatedly, contact the nearest Official Technical Assistance service.
E20-320	Compressor overcurrent protection	The compressor electric current is too high. Contact your nearest Official Technical Assistance Service.
E20-288	Excessive temperature in IPM.	The temperature in the IPM is too high. Contact your nearest official Technical Assistance Service.
E20-384	PFC module failure in IPM.	IPM error or incorrect wiring. Disconnect the heat pump from the mains and connect it again. If this

Code	Alarm	Description
		alarm persists or occurs repeatedly, contact the nearest Official Technical Assistance service.
E20-32	High voltage in IPM.	High voltage in IPM. Contact your nearest official Technical Assistance Service to have it repaired.
E20-16	Low voltage in IPM.	Low voltage in IPM. Contact your nearest official Technical Assistance Service to have it repaired.
E20-264	IPM AC voltage protection.	The power supply voltage is too high, too low or unstable.
E20-260	AC current protection.	The power supply current is too high. The heat pump will recover when the current returns to the permitted range of values.
E20-257	IPM communication failure.	Deficient communication in the IPM. Contact your nearest official Technical Assistance Service to have it repaired.
E20-261	Failure in the electrical supply current.	The power supply current is not correct. Check the electrical connection for the heat pump.
E21	Voltage error.	Voltage error in the heat pump. Disconnect and reconnect the power supply to the heat pump. If this alarm persists or occurs repeatedly, contact the nearest Official Technical Assistance service.
E22	Large temperature difference between flow and return.	Very large temperature difference between the values measured by the flow and return temperature sensors. Check the installation then disconnect the heat pump from the mains and connect it again. If this alarm persists or occurs repeatedly, contact the nearest Official Technical Assistance service.
E23	DHW mode anti-freeze function.	The DHW mode anti-freeze function has been triggered twice in the last 60 minutes. Disconnect the heat pump from the mains and connect it again. If this alarm persists or occurs repeatedly, contact the nearest Official Technical Assistance service.
E24	Heating/Cooling mode anti-freeze function.	The heating/cooling mode anti-freeze function has been triggered twice in the last 90 minutes. Disconnect the heat pump from the mains and connect it again. If this alarm persists or occurs repeatedly, contact the nearest Official Technical Assistance service.
E26	Heat pump settings incorrect.	Check the electrical diagram and the connector at sensor T6. Check the control card SW1's and all the Service Menu parameters. If this alarm persists or occurs repeatedly, contact the nearest Official Technical Assistance service.
E27	Room temperature exceeds limit.	The room temperature has exceeded the upper limit permitted (45ºC).
E28	High return temperature (cooling mode).	The temperature measured by the return temperature sensor in cooling mode is too high. Check the installation then disconnect the heat pump from the mains and connect it again. If this alarm persists or occurs repeatedly, contact the nearest Official Technical Assistance service.

Code	Alarm	Description
E29	Room temperature sensor failure.	Check the electrical diagram and the connector at sensor T2. Check the control card SW1's and all the Service Menu parameters. If this alarm persists or occurs repeatedly, contact the nearest Official Technical Assistance service.
E32	High flow temperature (Heating and DHW mode).	The temperature measured by the flow temperature sensor in heating or DHW mode is too high. Check the installation then disconnect the heat pump from the mains and connect it again. If this alarm persists or occurs repeatedly, contact the nearest Official Technical Assistance service.
E36	Fan motor communication failure (three-phase models).	Fan motor failure. Contact your nearest Official Technical Assistance Service to have it repaired.
E40	Low return temperature (cooling mode).	The temperature measured by the flow temperature sensor in cooling mode is too low. Check the installation then disconnect the heat pump from the mains and connect it again. If this alarm persists or occurs repeatedly, contact the nearest Official Technical Assistance service.
E44	Fan motor failure.	Fan motor failure. Contact your nearest Official Technical Assistance Service to have it repaired.
E50	External heat exchanger sensor too high.	The external heat exchanger temperature safety device has been triggered. Contact your nearest official Technical Assistance Service.
E56	Current protection.	The working current has exceeded the maximum working value for the compressor. Disconnect and reconnect the power supply to the heat pump. If this alarm persists or occurs repeatedly, contact the nearest Official Technical Assistance service.
E58	Room temperature below limit.	The room temperature has fallen below the lower limit permitted (-25ºC).
E59	Flow and return sensors reversed or 4-way valve failure.	Flow and return temperature sensors reversed or 4-way valve failure. Check the installation then disconnect the heat pump from the mains and connect it again. If this alarm persists or occurs repeatedly, contact the nearest Official Technical Assistance service.
E69	**Sr1** flow sensor open.	**Sr1** flow sensor broken or disconnected. To replace the sensor, contact the nearest Official Technical Service.
E70	**Sr1** flow sensor short-circuited.	
E71	**Sr2** flow sensor open.	**Sr2** flow sensor broken or disconnected. To replace the sensor, contact the nearest Official Technical Service.
E72	**Sr2** flow sensor short-circuited.	
E73	**Sext** outdoor temperature sensor circuit open.	The **Sext** outdoor temperature sensor is damaged or disconnected. To replace the sensor, contact the nearest Official Technical Service.
E74	**Sext** outdoor temperature sensor short-circuited.	
E75	Communication error with the **AIR Hydraulic Kit**.	Communication error between the **iConnect** module and the electronic control unit of the **AIR Hydraulic Kit**. If the alarm persists, contact the nearest OTS.

Code	Alarm	Description
E76	**Zone 1** room temperature sensor circuit open.	**Zone 1** room temperature sensor damaged or disconnected. To replace the sensor, contact the nearest Official Technical Service.
E77	**Zone 1** room temperature sensor short-circuited.	
E78	**Zone 2** room temperature sensor circuit open.	**Zone 2** room temperature sensor damaged or disconnected. To replace the sensor, contact the nearest Official Technical Service.
E79	**Zone 2** room temperature sensor short-circuited.	
E80	**Zone 3** room temperature sensor circuit open.	**Zone 3** room temperature sensor damaged or disconnected. To replace the sensor, contact the nearest Official Technical Service.
E81	**Zone 3** room temperature sensor short-circuited.	
E82	Communication error with the **iConnect** module.	Communication error between the **Dual Clima** heat pump and the **iConnect** module. If the alarm persists, contact the nearest OTS.
E83	**AIR Hydraulic Kit** not detected.	The **AIR Hydraulic Kit** is not detected when there is a wireless device paired in **Zone 1**. To repair the Kit, contact the nearest OTS.
E84	**AIR Hydraulic Kit** not detected.	The **AIR Hydraulic Kit** is not detected when there is a wireless device paired in **Zone 2**. To repair the Kit, contact the nearest OTS.
E85	**AIR Hydraulic Kit** not detected.	The **AIR Hydraulic Kit** is not detected when there is a wireless device paired in **Zone 3**. To repair the Kit, contact the nearest OTS.
E86	Communication error with wireless devices.	Communication error between the **iConnect** module and the **Receptor RF iC** radio module. If the alarm persists, contact the nearest OTS.
E87	Low battery in **Zone 1** wireless device.	The battery in the **Zone 1** wireless device is low. Replace the batteries before they run out.
E88	Low battery in **Zone 2** wireless device.	The battery in the **Zone 2** wireless device is low. Replace the batteries before they run out.
E89	Low battery in **Zone 3** wireless device.	The battery in the **Zone 3** wireless device is low. Replace the batteries before they run out.
E90	Low battery in wireless Outdoor Sensor.	The battery in the wireless outdoor sensor is low. Replace the batteries before they run out.
E91	Weak signal in **Zone 1** wireless device.	The radio signal between the wireless device in **Zone 1** and the **Receptor RF iC** is too weak. Move the wireless device to an area with better radio signal coverage. If the alarm persists, contact the nearest OTS.
E92	Weak signal in **Zone 2** wireless device.	The radio signal between the wireless device in **Zone 2** and the **Receptor RF iC** is too weak. Move the wireless device to an area with better radio signal coverage. If the alarm persists, contact the nearest OTS.
E93	Weak signal in **Zone 3** wireless device.	The radio signal between the wireless device in **Zone 3** and the **Receptor RF iC** is too weak. Move the wireless device to an area with better radio

Code	Alarm	Description
		signal coverage. If the alarm persists, contact the nearest OTS.
E94	Low signal in the wireless Outdoor Sensor.	NThe radio signal between the wireless Outdoor Sensor and the **Receptor RF iC** is too weak. Move the wireless device to an area with better radio signal coverage. If the alarm persists, contact the nearest OTS.
E99	Communication failure.	Communication failure between the power card and the IPM. Check the wiring. If this alarm persists or occurs repeatedly, contact the nearest Official Technical Assistance service.

NOTE: It will be very helpful to communicate de failure code to the technical assistance service if the service is required.



DOMUSA TEKNIK

POSTAL ADDRESS
Section 95
20730 AZPEITIA
Tel: +34 943 813 899

FACTORY & OFFICES
Bº San Esteban, no number
20737 ERREZIL (Gipuzkoa)
Fax: +34 943 815 666

CDOC004199 28/05/2026

www.domusateknik.com

DOMUSA TEKNIK reserves the right to make modifications of any kind to its product characteristics without prior notice.