DOMUSA TEKNIK

DUAL CLIMA HT EC PRO + EASY CONNECT

(Outdoor unit + Indoor module)

Air/water heat pump

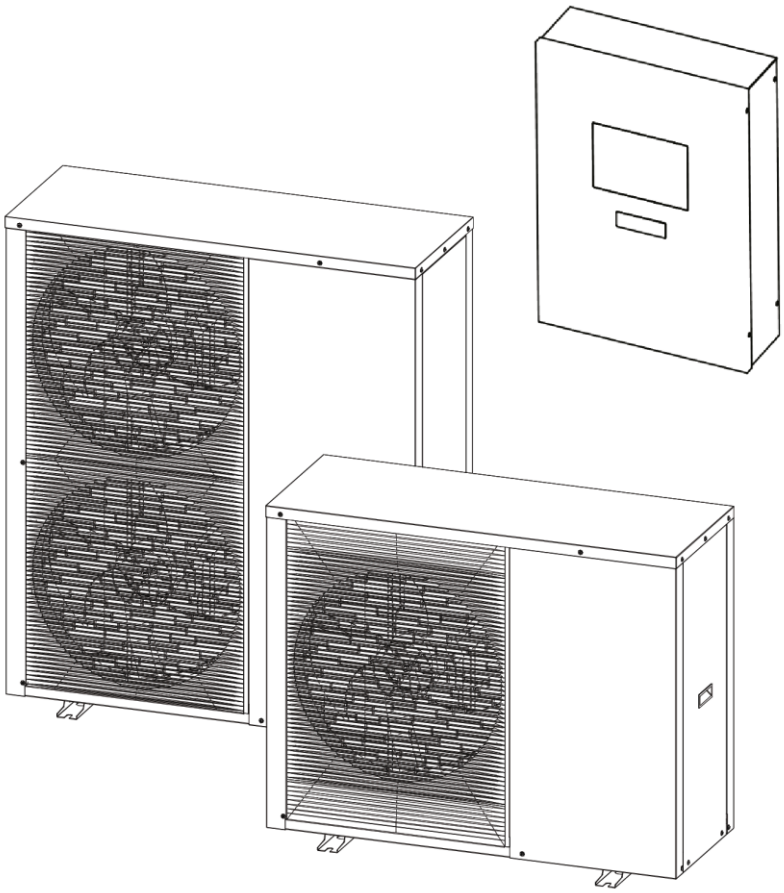

EN | INSTALLATION AND OPERATING INSTRUCTIONS

Thank you for choosing a **DOMUSA TEKNIK** heat pump. From the range of **DOMUSA TEKNIK** products you have chosen the **DUAL CLIMA HT EC PRO** model. With a suitable hydraulic installation, this heat pump will provide the ideal level of comfort for your home.

This document constitutes an essential part of the product and must be delivered to the end user. Read the warnings and recommendations in the manual carefully, as they contain important information on the safety, use and maintenance of the installation.

This heat pump must be installed by qualified personnel only, in accordance with the legislation in force and following the manufacturer's instructions.

Commissioning of this heat pump and any maintenance operations must only be carried out by **DOMUSA TEKNIK**'s Authorised Technical Assistance Services.

Incorrect installation of this heat pump could result in damage to people, animals or property, for which the manufacturer will hold no liability.

CONTENTS

1 SAFETY WARNINGS 6
1.1 USE AND INSTALLATION WARNINGS 6
1.2 PERSONAL SAFETY WARNINGS 6
1.3 TRANSPORT, STORAGE AND HANDLING WARNINGS 7
1.4 FREEZE PROTECTION WARNINGS 7
1.5 HEAT PUMP REFRIGERANT WARNINGS 8
2 ELECTRONIC CONTROL PANEL 9
2.1 CONTROL PANEL 9
2.2 ICONS ON THE CONTROL PANEL 10
2.3 DATE AND TIME SETTINGS 11
3 SWITCHING THE HEAT PUMP ON AND OFF 12
4 OPERATION 13
4.1 SELECTING MANUAL OPERATING MODES 13
4.2 COOLING MODE 13
4.3 HEATING MODE 14
4.4 DHW MODE 14
4.5 COOLING AND DHW MODE + ... 14
4.6 HEATING AND DHW MODE + ... 15
4.7 FUNCTIONING IN HEATING/COOLING "AUTO" MODE 15
4.8 OPERATION WITH ROOM SENSOR 16
4.9 OUTDOOR TEMPERATURE COMPENSATION FUNCTION OTC (OPTIONAL) 17
4.10 OPERATING WITH BUFFER TANK (OPTIONAL) 17
4.11 SILENT MODE 19
4.12 ANTI-LEGIONELLA FUNCTION 20
4.13 SG READY FUNCTION 20
5 TEMPERATURE SELECTION 23
5.1 SETTING THE COOLING MODE SETPOINT TEMPERATURE 23
5.2 SETTING THE HEATING MODE SETPOINT TEMPERATURE 23
5.3 SETTING THE DHW MODE SETPOINT TEMPERATURE 24
5.1 ADJUST THE ZONE 1 ROOM TEMPERATURE SETPOINT 24
5.2 ADJUSTING THE ANTI-LEGIONELLA FUNCTION SETTINGS 24
5.3 SETTING THE SG READY FUNCTION SETPOINTS 25
6 OUTDOOR UNIT INSTALLATION INSTRUCTIONS 26
6.1 ACCESSORIES SUPPLIED 26
6.2 LOCATION 26
6.3 FIXING THE HEAT PUMP 28
6.4 CONDENSATE DRAINAGE 29
6.5 HYDRAULIC INSTALLATION 29
6.6 HEATING WATER SPECIFICATIONS 32
6.6.1 INSTALLING A DHW TANK 32
6.6.2 INSTALLING A BUFFER TANK 33
6.6.3 FILLING THE INSTALLATION 35
6.6.4 DRAINAGE 36
6.6.5 INSTALLING A DEGASIFIER 36
6.7 OUTDOOR UNIT ELECTRICAL CONNECTIONS 37
6.8 FREEZE PROTECTION 38
6.8.1 DHW MODE ANTI-FREEZE PROCESS 39
6.8.2 HEATING/COOLING MODE ANTI-FREEZE PROCESS 39
7 INDOOR MODULE INSTALLATION INSTRUCTIONS 40
7.1 ACCESSORIES SUPPLIED 40
7.2 LOCATION 40
7.3 ELECTRICAL CONNECTIONS 41
7.3.1 INDOOR MODULE ELECTRICAL CONNECTIONS 41
7.3.2 CONNECTION TO THE OUTDOOR UNIT 41
7.3.3 CONNECTING THE CONTROL PANEL 42
7.3.4 CONNECTING THE ICONNECT MODULE 43
7.3.5 CONNECTING A DHW SENSOR 44

7.3.6 CONNECTING A DHW DIVERTER VALVE (G1) 45
7.3.7 CONNECTING A HEATING/COOLING DIVERTER VALVE (G2) 45
7.3.8 CONNECTING A ROOM SENSOR OR THERMOSTAT (OPTIONAL) 46
7.3.9 CONNECTING AN OUTDOOR TEMPERATURE SENSOR OTC (OPTIONAL) 48
7.3.10 CONNECTING A BUFFER TANK SENSOR (OPTIONAL) 48
7.3.11 CONNECTING AN INSTALLATION PUMP C4 (OPTIONAL) 48
7.3.12 CONNECTING A ZONE INSTALLATION PUMP Z1 AND/OR Z2 (OPTIONAL) 49
7.3.13 CONNECTING A ROOM THERMOSTAT TA1 AND/OR TA2 (OPTIONAL) 49
7.3.14 CONNECTING A BACKUP ENERGY SOURCE FOR DHW (E1) 50
7.3.15 CONNECTING A BACKUP ENERGY SOURCE FOR HEATING (E2) 52
7.3.16 CONNECTING A BACKUP PUMP (C1, C2 AND C3) 54
7.3.17 CONNECTING ROOM THERMOSTATS FOR "AUTO" MODE 55
7.3.18 CONNECTING AN AIR HYDRAULIC KIT 59
7.3.19 CONNECTING SG READY 60
7.3.20 CONNECTING A HUMIDITY SWITCH SENSOR (OPTIONAL) 60
7.3.21 CONNECTING AN ENERGY METER (OPTIONAL) 61
7.3.22 CASCADE INSTALLATION (OPTIONAL) 63
7.4 INSTALLATION WITH WIRELESS DEVICES CONFORT IC AND/OR SONDA IC (OPTIONAL) 65
7.4.1 INSTALLING AND CONNECTING THE RECEPTOR RF IC (RADIO MODULE) 65
7.4.2 MOUNTING AND LOCATION OF THE CONFORT IC REMOTE CONTROL AND THE SONDA IC 67
8 HEAT PUMP CONFIGURATION 68
9 TIME PROGRAMMING 69
10 WIRELESS DEVICES CONFORT IC AND SONDA IC (OPTIONAL) 70
11 *"ICONNECT"* CONNECTIVITY 71
11.1 REQUIREMENTS FOR THE CONNECTION TO *ICONNECT* 71
11.2 REGISTERING THE HEAT PUMP IN *ICONNECT* 72
11.3 DESCRIPTION OF THE *ICONNECT* APPLICATION 73
11.4 *ICONNECT* APPLICATION MAP 74
12 AIR HYDRAULIC KITS (OPTIONAL) 75
13 ADDITIONAL FUNCTIONS 76
13.1 INSTALLATION CONDENSATIONS PROTECTION FUNCTION 76
13.2 SOLAR ENERGY UTILISATION FUNCTION 76
13.3 OPERATION IN CASCADE 77
14 USER MENU 79
15 SETTINGS MENU 80
15.1 SYSTEM PARAMETERS 80
15.2 OPERATING STATUS 82
15.3 PAIR WIRELESS DEVICES 84
16 SETTING UP THE HEATING/COOLING CIRCUITS 86
16.1 OPERATION OF THE CIRCULATION PUMP (P20) 86
16.2 ZONE 2 COMBINED CIRCUIT TEMPERATURE LIMIT (P165) 86
17 CONFIGURING THE AUXILIARY OR BACKUP ENERGY SOURCES (E1, E2) 87
17.1 BACKUP SOURCE MODE (P81 = 0) 88
17.2 AUXILIARY SOURCE MODE (P81 = 1) 89
17.3 PASSIVE COMBINED MODE (P81 = 2) 89
17.4 ACTIVE COMBINED MODE (P82 = 3) 89
18 COMMISSIONIING 91
18.1 PRIOR WARNINGS 91
18.2 COMMISSIONING 91
18.3 INSTALLATION HANDOVER 91
19 MAINTENANCE 92
20 RECYCLING AND DISPOSAL 92
21 ELECTRICAL DIAGRAMS 93
21.1 NOMENCLATURES 93
21.2 INDOOR MODULE EASY CONNECT 94
21.3 OUTDOOR UNIT DUAL CLIMA 6HT EC PRO, 9HT EC PRO, 12HT EC PRO 95
21.4 OUTDOOR UNIT DUAL CLIMA 16HT EC PRO, 19HT EC PRO 96
21.5 OUTDOOR UNIT DUAL CLIMA 12HTT EC PRO 97
21.6 OUTDOOR UNIT DUAL CLIMA 16HTT EC, 19HTT EC, 22HTT EC 98

1 SAFETY WARNINGS

1.1 Use and installation warnings

The **DUAL CLIMA HT EC PRO** heat pump must be installed by personnel authorised by the Ministry of Industry, in compliance with the applicable laws and regulations. The precautions detailed here cover very important issues. Please be sure to follow them carefully.

Please carefully read this instruction manual and keep it in a safe, easily-accessible place. **DOMUSA TEKNIK** will not be liable for any damages caused by failure to follow these instructions.

The **DUAL CLIMA HT EC PRO** heat pump (outdoor unit) is exclusively suitable to be installed either with communication module Easy Connect (indoor module), or with one of the products of the ranges of indoor units **Fusion HT EC** or **Aqua EC** offered by **DOMUSA TEKNIK**, who integrate the Easy Connect communication module inside.

This heat pump is suitable for use in both heating and cooling installations and can be combined with fan coils, underfloor heating/cooling, low-temperature radiators, and domestic hot water tanks (optional). It must be connected to a heating/air conditioning installation and/or a domestic hot water distribution network and compatible with its performance and power.

This appliance should only be used for the purpose for which it has been expressly designed. Any other use is considered unsuitable and therefore hazardous. The manufacturer shall not be considered liable under any circumstances for damage caused by unsuitable, erroneous or improper use.

Remove all the packaging and check that the contents are complete. In case of doubt, do not use the heat pump and contact your supplier. The packaging components must be kept out of the reach of children, as they constitute potential sources of danger.

Improper installation or placement of equipment or accessories may cause electrocution, short circuit, leakage, fire or other damage to the equipment. Use only accessories or optional equipment manufactured by **DOMUSA TEKNIK** and specifically designed to work with the products in this manual. Do not modify, replace or disconnect any safety or control device without first consulting the manufacturer or the Official Technical Assistance Service of **DOMUSA TEKNIK**.

When you no longer wish to use the heat pump, disable the parts that could represent a potential hazard.

1.2 Personal safety warnings

Always wear suitable personal protection equipment (protective gloves, safety glasses, etc.) when carrying out installation and/or maintenance operations in the unit.

Do not touch any switches with wet hands. Touching a switch with wet hands may cause electric shock. Before accessing the electrical components of the heat pump, disconnect the power supply completely.

Disconnect all electricity sources before dismantling the service panel from the electric panel or before making any connections or accessing electrical parts.

To avoid electrocution, ensure the power is turned off for at least 1 minute before servicing the electrical parts. Even after 1 minute has elapsed, always measure the voltage at the terminals of the main circuit capacitors and other electrical parts before touching them, and make sure the voltage is 50 VDC or less.

When the service panels are disassembled, the live parts can be easily accessed. Never leave the unit unattended during installation or during maintenance work when the service panel is removed.

Do not touch the refrigerant pipes, water piping, or internal parts during or immediately after operation. Pipes and internal parts may become very hot or cold, depending on the use of the unit.

The heat or cold could burn your hands if you touch the pipes or internal parts in these conditions. To avoid injury, wait until the pipes and internal parts return to their normal temperature. Alternatively, if you need to access them, be sure to wear appropriate safety gloves.

1.3 Transport, storage and handling warnings

The **DUAL CLIMA HT EC PRO** heat pump must be transported, handled and stored in vertical position. Placing the appliance on its side can cause the oil inside the compressor to spill out, causing premature compressor breakage on start-up.

OK



NOT OK

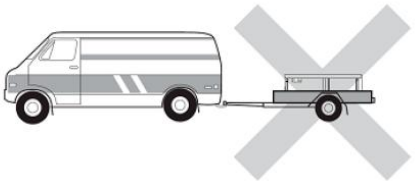

Do not twist, loosen, or pull the external electric cables of the heat pump. Do not insert any sharp objects through the fan grille or into the fan itself.

Do not clean the interior of the heat pump with water as this may result in electric shock or fire. For any cleaning and/or maintenance operations, disconnect the main power supply.

1.4 Freeze protection warnings

The **DUAL CLIMA HT EC PRO** is an appliance for installation on the outside of the building and it will consequently be exposed to frost during periods of extremely cold weather. Frost protection is therefore very important for this type of appliance. If the water inside the heat pump freezes it can cause the pump to break, stopping its functioning and making costly repairs necessary.

It is **compulsory** to use an anti-freeze system in the installation to prevent the water in the units from freezing **DOMUSA TEKNIK** recommends using anti-freeze liquid in the pump water circuit or an anti-freeze release valve system for draining the installation at very low temperatures. Please read the "Freeze Protection" section in this manual carefully for more detailed information on these systems. **DOMUSA TEKNIK's guarantee does not cover any damage caused by failing to use a freeze protection system.**

The **DUAL CLIMA HT EC PRO** heat pump's electronic control has a function for protecting the water inside it from freezing during periods of frost. **For this function to remain enabled and on standby, the heat pump must be connected to the mains and have a power supply, even when it is switched off or not in use.**

A water filter must be installed in the installation in order to avoid obstructions in the heat pump water circuit. It must be installed on the heat pump's return circuit, and it **MUST** be installed before filling and circulating the water through the installation. The water filter must be checked at least once a year and cleaned if necessary, although in new installations it is recommended to check it a few months after commissioning.

1.5 Heat pump refrigerant warnings

The **DUAL CLIMA HT EC PRO** contains **R290** refrigerant gas, which is highly flammable. In normal conditions of use, there is no risk of explosion and the refrigerant is non-toxic. However, in case of leakage, some aspects that could cause damages to third-parties must be taken into account, as the refrigerant could create a flammable atmosphere and give rise to fire or explosion.

All maintenance work must be carried out by qualified staff aware of the dangers of handling refrigerant gases.

IMPORTANT: The refrigerant gas contained in the heat pump is highly flammable and can cause damage to persons or property.

The main considerations to be taken into account are as follows:

- The heat pump refrigerant must be recovered for recycling or disposal in accordance with the current legislation.
- In case of leakage, any contact with the refrigerant gas could cause burns. To prevent injury, use the necessary safety protection and avoid contact with the refrigerant gas.
- Leakage could create a flammable atmosphere, giving rise to fire or explosion. As soon as any leakage is detected you must therefore ventilate the area and stay away from the appliance until all the gas has been correctly ventilated.
- The refrigerant must not come into contact with any sparks or sources of ignition. Refrigerant leaks must be detected using suitable devices for R290 refrigerant gas.
- It is **compulsory** to use a safety system in the installation for the case of refrigerant leaks. **DOMUSA TEKNIK** advises installing a degasifier in the pump water circuit. Please read the section "*Installing a degasifier*" in this manual carefully for more detailed information on this system. **DOMUSA TEKNIK will not be liable for any damages caused by failing to have a safety system in place for refrigerant leakage.**
- The heat pump must be installed by qualified personnel and in compliance with all current regulations.

2 ELECTRONIC CONTROL PANEL

2.1 Control panel

The electronic control unit of the **DUAL CLIMA HT EC PRO** heat pump has a touchscreen for controlling all the adjustable functions and settings.

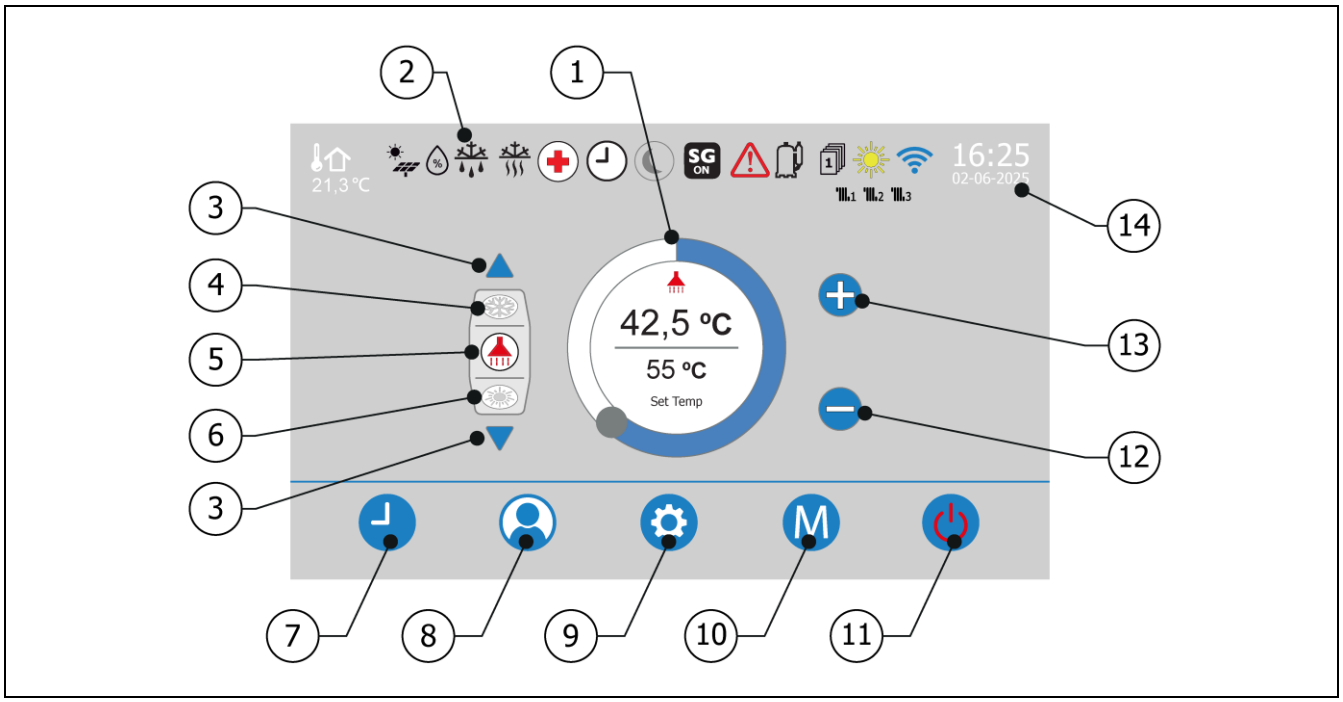

1. Temperature control knob:

Press this button to change the temperature for the different operating modes.

2. Status indicator:

Display of heat pump running status indicator icons every moment.
(See "*Icons on the control unit*").

3. Navigating arrows:

Click on these arrows to browse through the temperature display and setpoint selection screens.

4. Previous screen indicator:

This icon indicates the previous screen, which is accessed by pressing the bottom arrow.

5. Current screen indicator:

This icon indicates the current screen selection.

6. Next screen indicator:

This icon indicates the next screen, which is accessed by pressing the top arrow.

7. Programming Menu touch button:

Press this button to access the heat pump programming menu.
(See *"Time programming"*).

8. User Menu touch button:

Press this button to access the heat pump user menu. (See "*User Menu*").

9. Settings Menu touch button:

Press this button to access the heat pump configuration menu. (See "*Settings Menu*").

10. Operating Mode Menu touch button:

Press this button to access the different operating modes.
(See "*Selecting the operating modes*").

11. On/Off button:

This button switches the heat pump on and off.

12. "-" touch button:

Press this button to reduce the setpoint temperature for the different operating modes.

13. "+" touch button:

Press this button to increase the setpoint temperature for the different operating modes.

14. Date and time:

This selects and displays the date and time.

2.2 Icons on the control panel

The navigating arrows (**3**) of the main screen are used to select the real temperature display and to adjust the desired temperature setpoint for the various services available at any given time. The screen indicator icon (**5**) will show the selected screen:

Temperature selection screens	
	Heat Pump temperature in Cooling Mode.
	Heat Pump temperature in Heating Mode.
	DHW buffer tank temperature.
	Buffer tank temperature in Cooling Mode.
	Buffer tank temperature in Heating Mode.
	Zone 1 room temperature in Sensor Mode.
	Zone 2 room temperature in Sensor Mode.
	Zone 3 room temperature in Sensor Mode.
	Zone 1 circuit water temperature.
	Zone 2 circuit water flow temperature.
	Zone 3 circuit water temperature.
OTC	OTC mode enabled.

The status icons shown at the top of the main screen (**2**) indicate the operating status of the Heat Pump in real time. These icons are listed in the following table:

Status icons	
	Outdoor temperature.
	Solar power function activated.
	Anti-humidity function activated.
	De-icing function activated.
	Defrost function activated.
	Anti-legionella function activated.
	Time programming activated.

	Silent mode enabled.
	Silent mode 1 activated.
	Silent mode 2 activated.
SG ON	SG Ready function on mode.
SG OFF	SG Ready function off mode.
	Heat Pump alarm activated.
	Compressor on.
	Cascade function activated.
	Active operating mode at any time.
	Heat Pump registered in iConnect.
1	Zone 1 demand activated.
2	Zone 2 demand activated.
3	Zone 3 demand activated.

2.3 Date and time settings

The **DUAL CLIMA HT EC PRO** heat pump has a date and time indicator (**14**), for managing some of its functions. It is therefore vital to set the correct date and time on starting up the heat pump.

When the heat pump is registered in iConnect ( ), the time and date are updated automatically, so no changes are needed.

Press on the time indicator on the start screen to accede to time and date setup screen.

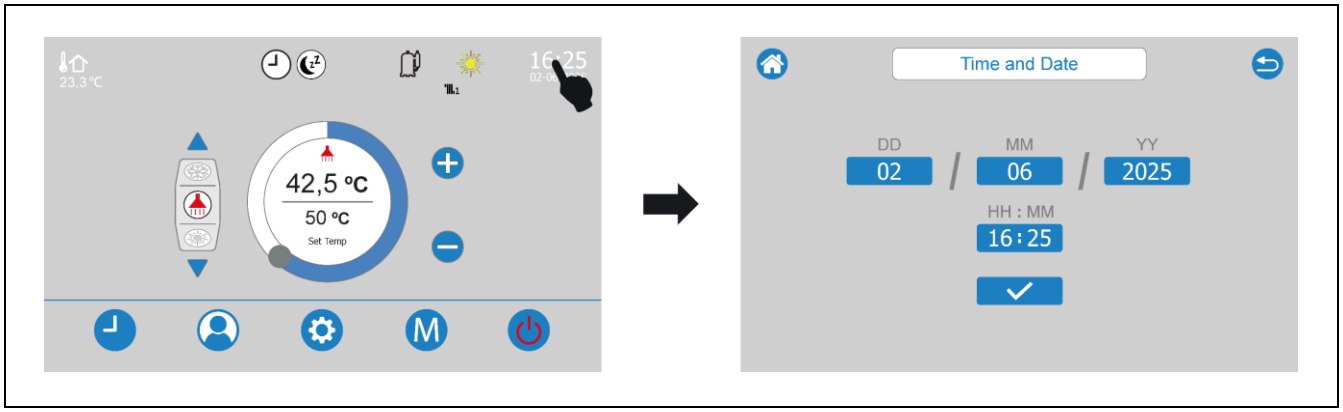

NOTE: An incorrect date and time setting may cause some features to malfunction.

3 SWITCHING THE HEAT PUMP ON AND OFF

To switch on the heat pump, press the On button (**11**) for 5 seconds. The heat pump will switch on in the last previously selected operating mode and the On button will light up in red . Different operating mode icons will light up on the digital display depending on the operating mode selected.

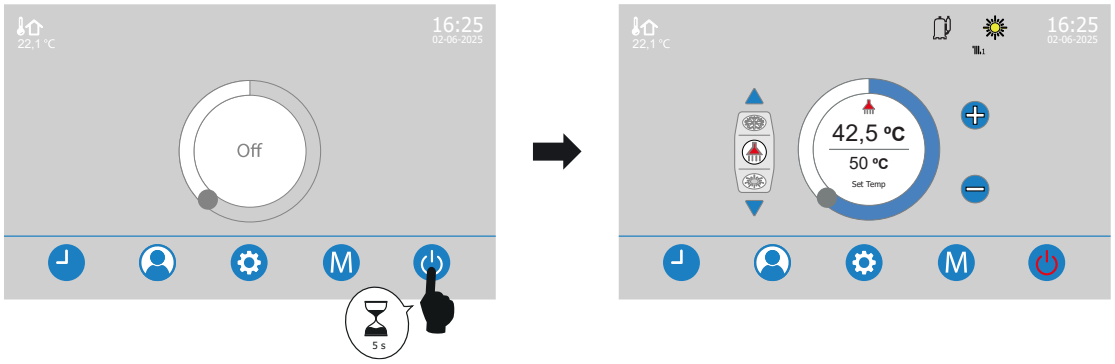

To switch off the heat pump, press the Off button (**11**) hold it down for 5 seconds. The heat pump will run through its switch-off sequence.

4 OPERATION

4.1 Selecting manual operating modes

Depending on the configuration of your installation, the **DUAL CLIMA HT EC PRO** heat pump can manage up to 5 operating modes manually. To select these operating modes, press the Operating modes touch button M (**10**) on the start screen. The following modes will appear on the display:

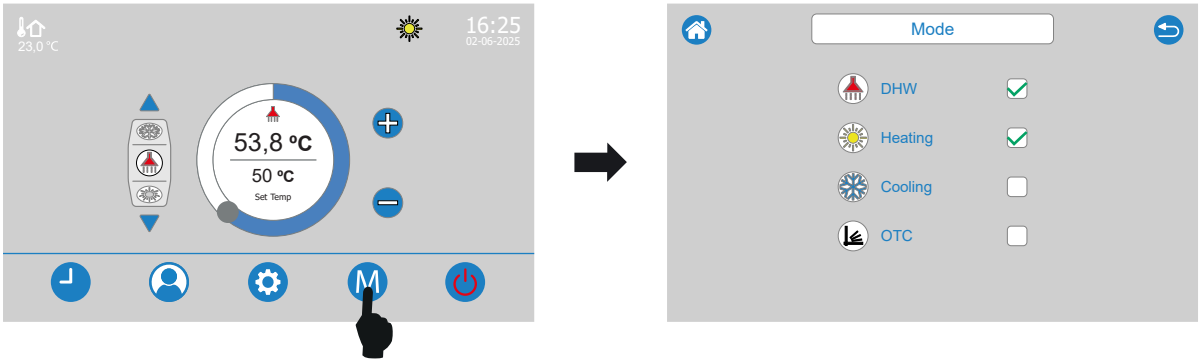

The selectable operating modes are as follows:

- Heating Mode.
- Cooling Mode.
- Domestic Hot Water (DHW) Mode.
- \+ Heating and DHW mode
- \+ Cooling and DHW mode

When the heat pump is configured and installed for "AUTO" mode functioning, the Heating and Cooling modes cannot be selected manually, as the heat pump will enable and disable them via a signal from the remote room thermostat connected to it (see *"Functioning in Heating/Cooling "AUTO" mode"*).

In case that a buffer tank is enabled, the heating and cooling icons will be replaced by their homologues et respectively (see *"Operation with buffer tank"*).

Depending on the configuration of your installation, some of the operating modes listed may not be selectable. Please read the following sections carefully as they describe the functioning of these modes in detail.

4.2 Cooling mode

This mode can only be selected if the heating/cooling installation is designed to function in Cooling mode (underfloor cooling, fan coils, etc.) and the heat pump is configured accordingly.

In this operating mode, the **DUAL CLIMA HT EC PRO** heat pump will cool the water in the heating/cooling installation and maintain it at the desired temperature. To do this, select the desired cooling setpoint temperature (see *"Temperature selection"*) and the room thermostat temperature (if the unit has a thermostat) (see *"Functioning in Heating/Cooling "AUTO" mode"*) or the room sensor temperature if the room sensor function is enabled (see *"Operation with room sensor"*).

In case that a buffer tank is enabled, the cooling icon will be replaced by the homologue, (see *"Operation with buffer tank"*) and the heating pump will cool the water in the buffer tank to the selected setpoint temperature.

This mode will **only** affect the heating/cooling installation, and if the unit has DHW production it will be disabled.

4.3 Heating mode

In this operating mode, the **DUAL CLIMA HT EC PRO** heat pump will heat the water in the heating/cooling installation and maintain it at the desired temperature. To do this, select the desired heating setpoint temperature (see *"Temperature selection"*) and the room thermostat temperature (if the unit has a thermostat) (see *"Functioning in Heating/Cooling "AUTO" mode"*) or the room sensor temperature if the room sensor function is enabled (see *"Operation with room sensor"*).

In case that a buffer tank is enabled, the heating icon will be replaced by the homologue, (see *"Operation with buffer tank"*) and the heating pump will heat the water in the buffer tank to the selected setpoint temperature.

This mode will **only** affect the heating/cooling installation, and if the unit has DHW production it will be disabled.

4.4 DHW mode

This mode will only be selectable if the installation has a Domestic Hot Water storage tank connected and the heat pump is configured accordingly.

In this operating mode, the **DUAL CLIMA HT EC PRO** heat pump will heat the water in the domestic hot water storage tank to the desired temperature, to provide DHW to the home. To do this, select the desired DHW setpoint temperature (see *"Temperature Selection"*). When the desired temperature is reached the heat pump will stop and will remain on standby until it receives a DHW request.

This mode will **only** affect the DHW storage tank installation, and the heating and/or cooling function of the heating/cooling installation will be disabled.

4.5 Cooling and DHW mode +

This mode will only be selectable only if the heating/air conditioning system is designed to operate in Cooling mode (underfloor cooling system, fan coils, etc.); the installation has a connected domestic hot water storage tank and the heat pump is configured accordingly.

This operating mode is the combination of the Cooling and DHW simultaneously. When a DHW request is activated, the heat pump will disable Cooling mode and enable Domestic Hot Water mode, giving priority to DHW production over the cooling function of the heating/air conditioning installation. Once the desired DHW temperature is reached, the heat pump will enable Cooling mode again.

In case that a buffer tank is enabled, the cooling icon will be replaced by the homologue, (see *"Operation with buffer tank"*).

4.6 Heating and DHW mode +

This mode will only be selectable if the installation has a Domestic Hot Water storage tank connected and the heat pump is configured accordingly.

This operating mode is a simultaneous combination of the Heating and DHW modes. When a DHW request is activated, the heat pump will disable Heating mode and enable Domestic Hot Water mode, giving priority to DHW production over the heating function of the heating/air conditioning installation. Once the desired DHW temperature is reached, the heat pump will enable Heating mode again.

In case that a buffer tank is enabled, the heating icon will be replaced by the homologue, (see *"Operation with buffer tank"*).

4.7 Functioning in Heating/Cooling "AUTO" mode

In **"AUTO"** mode, the **DUAL CLIMA HT EC PRO** heat pump can enable Heating or Cooling mode "automatically". To enable this operating mode, the electronic control has 2 connections (one for enabling Heating mode and the other for enabling Cooling mode). A combination of **room thermostats** can be connected to enable the heat pump to activate one or more operating modes automatically and remotely from wherever these thermostats are installed inside the home. To correctly install this thermostat, carefully follow the instructions provided in the section *"Connecting Room Thermostats for "AUTO" mode*.

After connecting the programmable room thermostat or room thermostat for heat and cold, the heat pump will activate the Heating or Cooling function automatically, depending on the thermostat settings and the indoor temperature in the home. The user must select the desired temperature, the operating mode (Heating or Cooling) and the periods of operation if it is a programmable thermostat (See the Thermostat Manual). The heat pump will start up and the operating mode selected on the thermostat will be activated (Heating or Cooling) until the desired temperature is reached. When the desired temperature is reached in the home, the heating or cooling mode will be deactivated and the heat pump will switch off. The electronic control unit screen will display the following screen, indicating that the heat pump has been shut down by the room thermostat (Stand By).

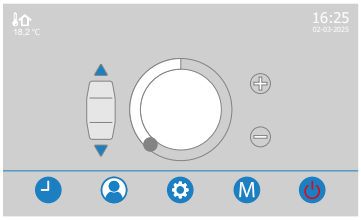

The installation of a room thermostat will optimise installation operation by adapting heating/cooling operation to the needs of the home and achieving a higher degree of comfort. In addition, if the thermostat can be used to program hours of operation (programmable thermostat), the service can be adapted to the scheduled use of the facility.

When the DHW production mode is selected in the heat pump control panel (), the electronic control unit will activate the Heating or Cooling modes in combination with DHW production as described in the sections titled *"Cooling mode and DHW service* + *"* and *"Heating mode and DHW service* + *"*, therefore, automatic selection of the operating mode will not affect DHW production

The table below shows the functioning of the **DUAL CLIMA HT EC PRO** heat pump in **"AUTO"**, mode, depending on the remote mode selection made on the Hot/Cold thermostat:

Thermostat Selection	Dual Clima HT EC PRO	Control panel
Heating	Heating Mode: The heat pump enables Heating mode.	
	Combined Heating + DHW mode: The heat pump enables Heating mode, providing the desired setpoint temperature has already been reached in the DHW storage tank.	
Cooling	Cooling Mode: The heat pump enables Cooling mode.	
	Combined Cooling + DHW mode: The heat pump enables Cooling mode, providing the desired setpoint temperature has already been reached in the DHW storage tank	
OFF (Stand By)	Heating or Cooling Modes: When the desired temperature is reached in the home, or when the room thermostat is disabled (if it equipped with this function), the heating or cooling function will be disabled.	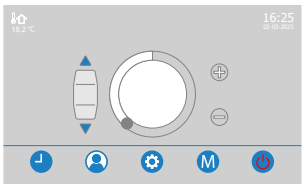
	Combined Heating or Cooling + DHW modes: When the desired temperature is reached in the home, or when the room thermostat is disabled (if it equipped with this function), the heating or cooling function will be disabled and DHW mode will remain enabled.	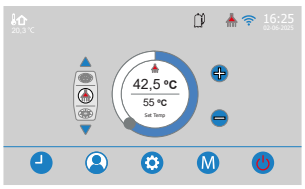

4.8 Operation with room sensor

This operating mode cannot be enabled until a room temperature sensor is connected to the **Easy Connect** indoor module (see *"Connecting a room sensor or thermostat"*). To enable this function, set parameter **P150** of the "System Parameters" menu to 4 (see *"Settings Menu"*). Also, parameters **117** (in Heating mode) and **118** (in Cooling mode) can be used to set the difference in temperature needed to reactivate demand after reaching the desired temperature. The range of temperatures that can be selected is 0.2~5ºC. The default factory setting is 0.5ºC.

Operation with the room temperature sensor will optimise the Heating/Cooling installation by adapting the operation of the heat pump to the needs of the home and achieving a higher degree of comfort. The electronic control unit will adjust the temperature setpoints of the heat pump according to the room conditions registered by the room temperature sensor installed in the home. This will optimise energy savings and increase installation efficiency.

This feature applies to both operating modes of the heat pump, both Heating and Cooling. To initiate operation, select the corresponding operating mode, Heating or Cooling (see sections above), the temperature setpoint for the selected mode and the room temperature setpoint for the home (see *"Selecting temperatures"*).

Once room temperature sensor operation is enabled, a new column () will be displayed in the time programming menu, allowing different room temperature setpoints to be adjusted for each programming period (see "Time programming"). If the room temperature setpoint is not set in a period, the manually selected setpoint shall be applied (see "Temperature selection").

4.9 Outdoor temperature compensation function OTC (Optional)

To enable this function, set parameter **P154** of the "System Parameters" menu to any value other than **OFF** (see *"Settings Menu"*). The Zone 1 temperature display screen (1) of the control panel will show the acronym "**OTC**", replacing the Heating setpoint. After the desired value is selected, activate the function by selecting the "**OTC**" mode in the "Operating Modes" menu (M) (**10**) of the home screen.

When this operating mode is enabled, the Heating temperature of the heat pump or the buffer tank, if there is one, will be calculated according to the slope of the K curve selected in parameter **P154** and the outdoor temperature measured by the outdoor temperature sensor. If the installation is the proper size, the temperature of the heat pump calculated by this function will ensure a room temperature that corresponds to the programmed setpoint.

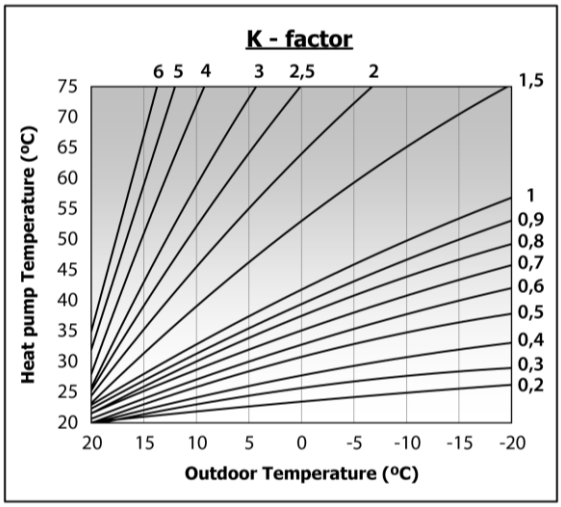

The slope of the K curve reflects the association between the outdoor temperature and the Heating temperature setpoint of the heat pump or buffer tank, if there is one. The attached chart shows the list of temperatures for each K curve value.

The ideal K curve will vary according to the type of heating circuit, the insulation conditions of the building and the location of the outdoor temperature sensor. As a general rule, a K curve of **1** or higher is recommended for high temperature heating circuits (e.g., circuit of "radiators"), whereas a K curve of **0,8** or lower is recommended for low temperature circuits (e.g., circuit of "underfloor heating"). In the latter type of circuit, it is not recommended to select a K curve that can generate temperatures over 55ºC, since this can damage the installation and the furniture in the home.

Although the outdoor heat pump unit is equipped with a sensor that measures the outdoor temperature where it is installed, to make the most of the OTC function, it is advisable to connect an OTC outdoor temperature sensor in an appropriate location, following the instructions given in the section titled *"Connecting an Outdoor Temperature Sensor OTC"* .

The DOMUSA TEKNIK warranty does not cover damage caused by selecting an inappropriate K curve for operation.

NOTE: Inappropriate selection of the K curve may result in the heating installation not generating the desired conditions in the home, not heating enough in extremely cold weather or heating too much in warm weather conditions.

4.10 Operating with buffer tank (Optional)

The **DUAL CLIMA HT EC PRO** heat pump can be installed in conjunction with a **Buffer tank** (BT, BT-Duo, Fusion Trio, etc.) from the wide range of air source accessories made by **DOMUSA TEKNIK**. This tank stores thermal energy to improve the performance of the installation when the heat pump switches on or off. For proper installation, carefully follow the assembly instructions provided with the tank; in addition, to connect it to the heat pump, read the instructions provided in the *"Installing a buffer tank"* section of this manual.

This operating mode cannot be enabled until a room temperature sensor is installed in the buffer tank and connected to the **Easy Connect** indoor module (see *"Connecting the buffer tank sensor"*). To enable this function, set parameter **P121** of the "System Parameters" menu to **1** (see *"Settings Menu"*). On the home screen of the control panel, the (Heating mode) and (Cooling mode) icons will be

replaced by their corresponding and icons, respectively. In turn, parameter **122** can be used to set the difference in temperature needed to reactivate tank water heating or cooling after the desired temperature is reached. The range of temperatures that can be selected is 5~40ºC. The default factory setting is 5ºC.

In this operating mode, users must select the desired temperature setpoint for the buffer tank (see *"Selecting temperatures"*), the Heating or Cooling operating mode and the temperature setpoint of the installed thermostat or room temperature sensor. Depending on the temperature read by the tank sensor and the status of the room thermostats and/or sensors in the installation, the electronic control unit of the **Easy Connect** indoor module will switch on the heat pump to reach the temperature setpoint of the buffer tank at any given time. When the temperature in the tank reaches the selected setpoint, the heat pump will switch off until the temperature drops (Heating mode) or rises (Cooling mode) below or above the desired temperature by the amount set in parameter **P122** (5ºC by default), which will start a new heating or cooling cycle.

When this operating mode is enabled, apart from managing the buffer tank temperature, the **Easy Connect** indoor module can also manage the hydraulic heating and cooling circuits installed downstream from the tank (Zone 1), provided the installation is configured for this purpose (see *"Installing a buffer tank"*). Operation would be as follows, depending on the configuration of the installation:

Installation with Room Temperature Sensor

This type of installation requires selecting the buffer tank setpoint, the heat pump operating mode and the room temperature setpoint (see *"Selecting temperatures"*). The electronic control unit will manage the operation of Zone 1 (**C4** and **Bcd1** of the **AIR Kit** if in use) circulation pump, depending on the temperature registered by the room sensor installed inside the home and the adjusted setpoint (see *"Operation with room sensor"*).

Installation with room thermostats TA1 and/or TA2

This type of installation requires selecting the buffer tank setpoint, the heat pump operating mode and the room temperature setpoints of thermostats **TA1** and/or **TA2** installed inside the home. Moreover, **the operation of both thermostats must be set according to the selected operating mode, Heating or Cooling**. The electronic control unit will use the signal received at inputs **TA1** and/or **TA2** of the indoor module to activate or deactivate operation of circulation pumps **Z1** and/or **Z2**, respectively. These pumps will be used to manage heating or cooling of up to 2 separate Heating/Cooling zones.

Operation in "AUTO" mode with 2 room thermostats

If two room thermostats are installed simultaneously, the operating mode is selected (one for Heating and the other for Cooling) (see *"Connecting the Room sensor or Thermostat"*), by selecting the desired temperatures and operating periods if the thermostats are programmable (see the Manual supplied with the Thermostat). The heat pump will start up and the operating mode corresponding to the thermostat (Heating or Cooling) will be activated until the desired temperature is reached. When the desired temperature is reached in the home, the heating or cooling function of the heating/air conditioning installation will be disabled, turning off the operation of the heat pump. The information shown below will appear on the electronic control panel to indicate that the heat pump has been switched off by the room thermostat (standby).

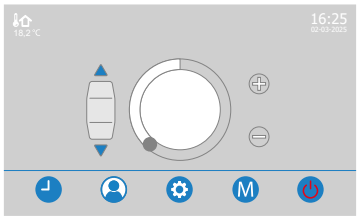

IMPORTANT: Ensure the correct temperatures are selected on each one to prevent crossover, with both thermostats being enabled at the same time.

Operation in "AUTO" mode with heat/cold toggle thermostat (2 wires)

If a **heat/cold toggle room thermostat** (2 wires) is installed, to select the operating mode automatically, the same operating mode (Heating or Cooling) will need to be selected on the heat pump as the mode it is to work in. Once the thermostat is installed in the home, select the desired temperature and operating times, if it is a chronothermostat (see the Thermostat Manual). The heat pump will switch on and activate the selected operating mode (Heating or Cooling) until the temperature set on the room thermostat is reached. When the desired temperature is reached in the home, the heating or cooling function of the heating/air conditioning installation will be disabled, turning off the operation of the heat pump. The information shown below will appear on the electronic control panel to indicate that the heat pump has been switched off by the room thermostat (standby).

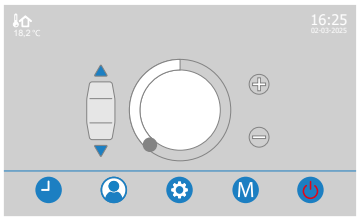

IMPORTANT: ensure the operating mode is correctly selected on the heat pump, so that both of them work in the same mode.

4.11 Silent Mode

To reduce the sound impact of the heat pump during particularly sensitive periods (nighttime), the **DUAL CLIMA HT EC PRO** heat pump allows the activation of Silent Mode.

During Silent Mode operation, the heat pump reduces fan and compressor speeds in order to lower its noise level.

Two selectable levels are available depending on the required degree of noise reduction: Silent Mode 1 and Silent Mode 2.

IMPORTANT: Incorrect selection and configuration of Silent Mode may prevent the heating system from delivering the desired comfort level in the home.

To activate and configure this operating mode, adjust the parameters available within the User Menu or parameters **P15**, **P16**, and **P17** in the System Parameters (see Configuration Menu).

4.12 Anti-legionella function

This function prevents the proliferation of Legionella bacteria in the domestic hot water accumulated in the tank, so it will only be available if the installation has a connected Domestic Hot Water storage tank and the heat pump is configured accordingly.

To enable this function, adjust parameter **P14** in the System Parameters (see *Settings Menu*). The heat pump has the anti-legionella function disabled by default. To enable it, set parameter **P14** to **0**.

The function will regularly increase the temperature of the domestic hot water in the tank to 50~70 ºC. The desired temperature and frequency can be selected for this purpose (see *"Temperature selection"*). This function will be activated regardless of the operating modes that enabled at the time of commissioning, even when the heat pump is in standby mode.

Also, providing the function is enabled (**P14**=**0**), this function can be activated manually at any time using the parameter **P14** in the System Parameters (see *Settings Menu*). Setting parameter **P14** to **1** will enable the anti-legionella function once. When the function is activated it cannot be stopped and you must wait until the cycle is complete for the appliance to resume its normal functioning.

4.13 SG Ready function

The **DUAL CLIMA HT EC PRO** heat pump includes the **SG Ready** (Smart Grid) function. This function allows the power company to communicate with the heat pump and adapt it optimally to the mains network demand via a smart control. Its consumption can therefore be adapted to the grid requirements, helping accumulate energy at the most profitable times and avoiding consumption when the grid demand is highest.

By default, the heat pump is supplied with the SG Ready function disabled. To activate it, set parameter **P201** to 1. Also, to accumulate energy at the times determined by the power company and to adapt your consumption to grid demand, new heating, cooling and/or domestic hot water setpoints will need to be selected for each operating mode.

NOTE: To ensure energy storage with the SG Ready function, it is necessary to have a DHW storage tank and buffer tank for heating and/or cooling installed.

This function will accumulate energy and

This function will accumulate energy and reach the newly defined setpoints using both the compressor and the back-up energy sources for DHW (E1) and heating (E2). To set the working mode of the heat pump to SG Ready, adjust parameter **P208** of the System Parameters (see "*Settings Menu*") to operate with heat pump and backup energy sources for DHW (E1) and heating (E2), or operating only with heat pump, o finally, operating only with backup energy sources E1 and E2. If only the heat pump is to be worked with, bear in mind that the backup energy sources for DHW (E1) and heating (E2) will not work to reach the newly defined setpoints, regardless of the auxiliary or backup energy sources (**P81**) selected.

The **Easy Connect** communication indoor module incorporates two terminal strip inputs **X1** (see *"Connection Diagram"*). In combination with the different options, these inputs define 4 **SG Ready** operating modes:

	MODE OFF	**MODE STANDARD**	**RECOMMENDED START-UP MODE**	**MODE ON**
SG1	ON (Closed)	OFF (Open)	OFF (Open)	ON (Closed)
SG2	OFF (Open)	OFF (Open)	ON (Closed)	ON (Closed)
CONNECTION DIAGRAM	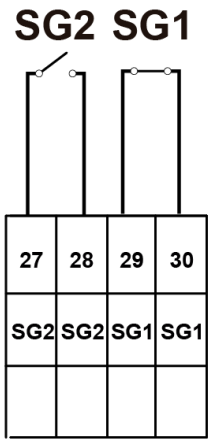	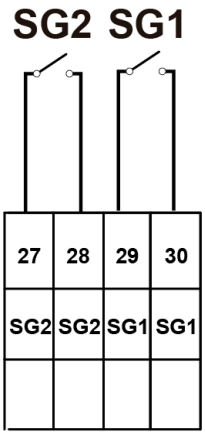	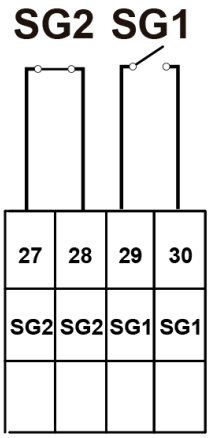	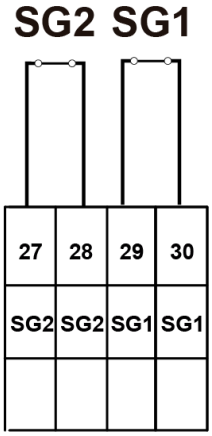
REMOTE CONTROL	SG OFF	-	SG ON	SG ON

Off mode SG OFF

In off mode, when there is an excessive power consumption demand in the grid, the power company instructs the heat pump not to switch on at all (standby mode). The heat pump will not switch on in heating, cooling and/or domestic hot water mode. None of the safety functions (anti-freeze, defrost, etc.) will be affected in this operating mode. Off mode will last for a **maximum of 2 hours**.

While off mode is operational, the **SG Ready** Function icon will be displayed in off mode SG OFF on the start screen, indicating that **SG Ready** function has turned off the heat pump operation.

Standard mode

In standard mode, the power company cannot alter the functioning of the heat pump. The heat pump will operate normally and no icon will be displayed on the start screen.

Recommended start-up mode SG ON

In recommended start-up mode, the power company recommends switching on the heat pump in order to adapt consumption to the mains demand. This will require the selection of new heating, cooling and/or domestic hot water setpoints depending on the installation. The new setpoints must be selected by technically qualified personnel. To do this, parameters **P202, P204** and **P206** of the System Parameters must be adjusted (see *Settings Menu*).

While recommended start-up mode is enabled, the function will increase the temperature in the DHW tank and/or buffer tank installed to the selected temperature.

While recommended start-up mode is operational, the **SG Ready** Function icon will be displayed in on mode SG ON on the start screen, indicating that **SG Ready** function has turned on the heat pump operation with new setpoint temperatures.

NOTE: Incorrect setting of the parameters may result in the heating system not providing the desired comfort in the house.

Start-up mode SG ON

In start-up mode, the power company forces heat pump switch-on in order to adapt the consumption to the grid demand. This will require the selection of new heating, cooling and/or domestic hot water setpoints depending on the installation. The new setpoints must be selected by technically qualified personnel. To do this, parameters **P203, P205** and **P207** of the System Parameters must be adjusted (see *Settings Menu*).

While start-up mode is enabled, the function will increase the temperature in the DHW tank and/or buffer tank installed to the selected temperature.

While start-up mode is operational, the **SG Ready** Function icon will be displayed in on mode SG ON on the start screen, indicating that **SG Ready** function has turned on the heat pump operation with new setpoint temperatures.

NOTE: Incorrect setting of the parameters may result in the heating system not providing the desired comfort in the house.

5 TEMPERATURE SELECTION

The desired temperature setpoint of each operating mode will be adjusted on the temperature display screen of each mode. The screen is accessed by using the navigating arrows (**3**) to select the desired screen and then using the control knob (**1**) and the touch button "+" (**13**) or "-" (**12**) to select the desired temperature. The selected temperature will be displayed in the centre of the screen.

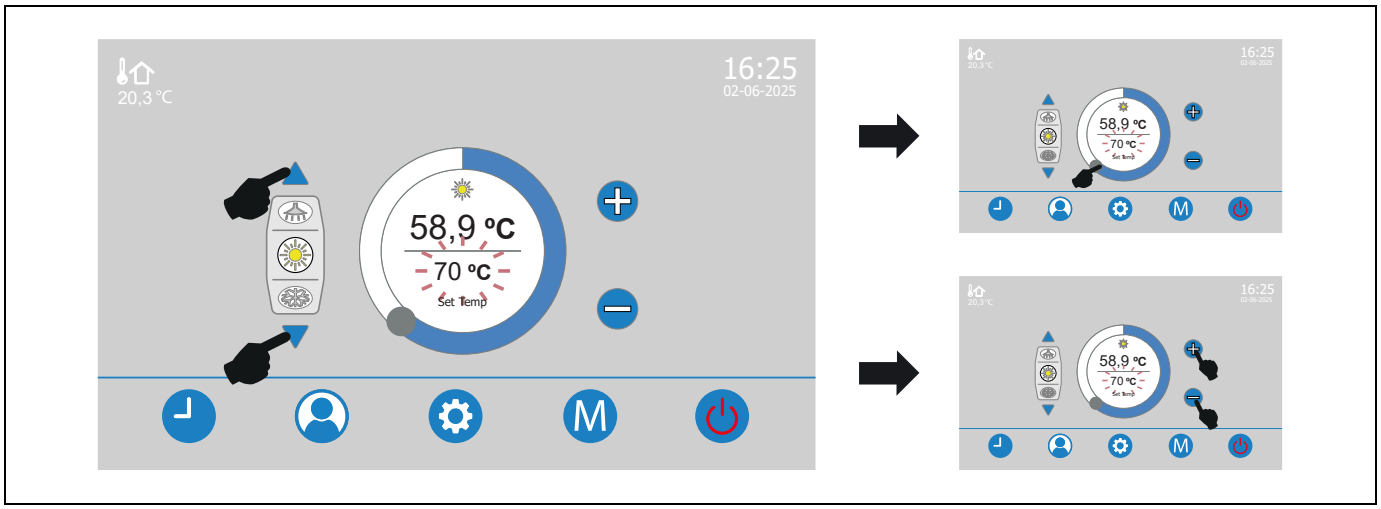

5.1 Setting the Cooling Mode setpoint temperature

To adjust the temperature setpoint for the Cooling mode, use the navigating arrows (**3**) to select the Cooling temperature screen. The selectable range of values for Cooling operating mode is 7~25 ºC. The pre-set default value is 12ºC. In case of a buffer tank is enabled, selected setpoint temperature will be applied to the water in the buffer tank. In case that a buffer tank is enabled, the cooling icon will be replaced by the homologue, (see *"Operation with buffer tank"*).

To correctly set suitable values for this operating mode, follow the recommendations given by the installer or the **DOMUSA TEKNIK** Official Technical Service. Depending on the type of installation, the location (climatic zone) and the relative humidity of the home, excessively low temperatures of the Cooling mode setpoint may create "undesired" condensation in the heating/air conditioning system, causing deterioration and damage in the home.

IMPORTANT: DOMUSA TEKNIK will not be held liable for any damages and/or breakdowns in either the installation or the home caused by inadequate selection of the Cooling Mode setpoint temperature.

5.2 Setting the Heating Mode setpoint temperature

To adjust the temperature setpoint for the Heating mode, use the navigating arrows (**3**) to select the Heating temperature screen. The selectable range of values for Heating operating mode is 25~75 ºC. The pre-set default value is 45ºC. In case of a buffer tank is enabled, selected setpoint temperature will be applied to the water in the buffer tank. In case that a buffer tank is enabled, the heating icon will be replaced by the homologue, (see *"Operation with buffer tank"*).

To correctly set suitable values for this operating mode, follow the recommendations given by the installer or the **DOMUSA TEKNIK** Official Technical Service. Depending on the type of installation (radiating floor,…), excessively high temperatures of the Heating mode setpoint may cause deterioration and damage both in the installation or in the house.

If the operating mode is activated according to outdoor weather conditions, the Zone 1 temperature display screen will show "**OTC**" and the heating setpoint temperature will be adjusted automatically by the electronic control panel, depending on the temperature measured outside the home and the K curve pre-adjusted by the installer or the Official Technical Service (see *"Operation according to outdoor temperature conditions OTC"*).

NOTE: If automatic operation according to outdoor temperature conditions ("OTC") is selected, inappropriate selection of the K curve may result in the heating installation not generating the desired conditions in the home, not heating enough in extremely cold weather or heating too much in warm weather conditions.

IMPORTANT: DOMUSA TEKNIK will not be held liable for any damages and/or breakdowns in either the installation or the home caused by inadequate selection of the Heating Mode setpoint temperature.

5.3 Setting the DHW Mode setpoint temperature

To adjust the temperature setpoint for the DHW mode, use the navigating arrows (**3**) to select the Cooling temperature . The selectable range of values for DHW operating mode is 25~70 ºC. The pre-set default value is 45ºC.

If the desired temperature in the tank is higher than the value selected for parameter **P35** of the System Parameters (see "*Settings Menu*"), an auxiliary heat source must be installed on the tank as a backup (electric heating element, backup boiler, etc.). The **DUAL CLIMA HT EC PRO** heat pump will heat up the water in the tank to the value selected for parameter **P35**. After this, it will activate the auxiliary heat source **E1** to reach the highest desired temperature. The selectable range of values for **P35** parameter is 10~70 ºC. The pre-set default value is 70ºC.

5.1 Adjust the Zone 1 room temperature setpoint

If room sensor operation is enabled in Zone 1, adjust the room temperature setpoint for that zone using the navigating arrows (**3**) to select the room temperature screen for Zone 1 . The range of temperatures that can be selected is 0: Off, 10.0~35.5ºC. The default factory setting is Off.

5.2 Adjusting the Anti-Legionella function settings

To set and activate the anti-legionella function, you must adjust parameters **P10**, **P11**, **P12 P13** and **P14** of the System Parameters (see "*Settings Menu*").

Activating the Anti-legionella function

To activate the anti-legionella function, you must adjust parameter **P14** of the System Parameters (see Settings Menu). The selectable range of values is 0~2.

- **P14**=0: Automatic operation of anti-legionella function.
- **P14**=1: Manual operation of anti-legionella function. The anti-legionella function will be activated once when manual mode is selected. The function will not be run again until its next manual enablement.
- **P14**=2: Anti-legionella function switch-off.

Anti-Legionella Temperature

To select the anti-legionella setpoint temperature, you must adjust parameter **P13** of the System Parameters (see "*Settings Menu*"). The selectable range of values for the anti-legionella function is 50~70 ºC. The pre-set default value is 70ºC.

Frequency

To adjust the activation frequency of the anti-legionella function (in days), you must adjust parameter **P10** of the System Parameters (see *Settings Menu*). The selectable range of values is 1~99 days. The pre-set default value is 7 days.

Start Time

To adjust the time at which the anti-legionella function is activated, you must adjust parameter **P11** of the System Parameters (see *Settings Menu*). The selectable range of values is 0-23 hours. The pre-set default value is 23 hours (23.00h).

Maintenance minutes

To adjust the length of time the function will remain active once the selected temperature has been reached, you must adjust parameter **P12** of the System Parameters (see *Settings Menu*). The selectable range of values is 5~99 minutes. The pre-set default value is 10.

5.3 Setting the SG Ready function setpoints

For configuring and operating the SG Ready function, in "Recommended Start-up" and "On" modes, new for heating, cooling and/or domestic hot water setpoints need to be selected for each operating mode. See "*SG Ready function*".

To select new heating setpoints, parameters **P202,** for Recommended start-up mode, and **P203,** for On mode, must be adjusted. The selectable range of values is 0~75 ºC. The preset default value for both is **OFF**. If the **OFF** default value is kept, no new temperature setpoints will be applied for the operating modes.

To select new cooling setpoints, parameters **P204,** for Recommended start-up mode, and **P205,** for Start-up mode, must be selected. The selectable range of values is 10~30 ºC. The pre-set default value for both is **OFF**. If the **OFF** default value is kept, no new temperature setpoints will be applied for the operating modes.

To select new domestic hot water setpoints, parameters **P206,** for Recommended start-up mode, and **P207,** for On mode, must be adjusted. The selectable range of values is 0~70 ºC. The pre-set default value for both is **OFF**. If the **OFF** default value is kept, no new temperature setpoints will be applied for the operating modes.

NOTE: Incorrect setting of the parameters could mean the heating installation may not generate the desired thermal comfort in the home.

6 OUTDOOR UNIT INSTALLATION INSTRUCTIONS

6.1 Accessories Supplied

The following accessories are supplied inside the **DUAL CLIMA HT EC PRO** heat pump. Before installing the appliance, make sure none of these accessories are missing or damaged.



Documentation: You will find the documentation bag inside the appliance, opening the front panel. It includes all the necessary manuals and documents for using and installing the heat pump.

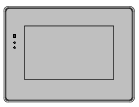

Control panel: You will find the control panel inside the appliance, on removing the electronic card cover. The control panel must be installed inside the home before connecting the power supply to the appliance.



Blow-off valve: This is supplied inside the appliance, fastened with a cable tie to one of the compressor feet. The valve must be fitted to the drain socket on the rear of the heat pump before filling the heating/air conditioning circuit with water (see "*Diagrams and measurements*").

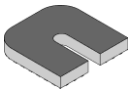

4x Anti-vibration supports: Four supports are supplied in a bag taped to the rear of the appliance, beside the hydraulic connections.

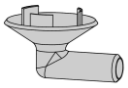

Condensate drain valve: This is supplied inside the appliance, fastened with a cable tie to one of the compressor feet. This valve must be fitted to the condensate drain socket at the bottom of the rear side of the heat pump.



DHW temperature sensor: This is supplied inside the appliance, inside the documentation bag. This sensor is used for installing a DHW tank. For a correct installation read *"Indoor module installation instructions"*.

6.2 Location

The heat pump (outdoor unit) must be installed exclusively outside the home and, where possible, in an area free from obstructions. If a guard around the appliance is required, it must have spacious openings on all four sides, leaving the minimum required spaces for installation as indicated in the figure below. There must be no obstacles preventing air circulation through the evaporator and at the fan outlet.

Consult the user before choosing the location of the appliance. Do not install It beside walls where it could create noise problems, e.g. a wall next to a bedroom. Make sure that the location of the heat pump is not disruptive to neighbours (noise level, draughts, cold air outlet creating risk of freezing for plants in its path, etc.).

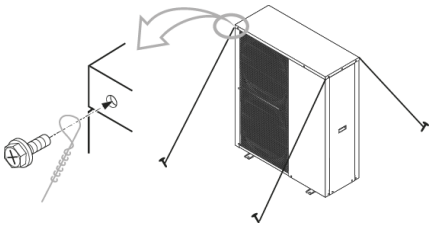

A location with sunlight and protected from strong cold winds (mistral, tramontane, etc.) is preferable. If the heat pump is exposed to gusts of wind that could overturn it, it should be supported by suitable anchoring devices, as shown in the figure.

The device must be sufficiently accessible for subsequent installation and maintenance work. Ensure that there is sufficient room available to make the hydraulic and electrical connections into the home. The separation measurements shown in the figure above are those strictly necessary to ensure correct operation of the appliance. However, it will sometimes be essential to provide more space for maintenance work.

Given that the DUAL CLIMA HT PRO heat pump uses R290 refrigerant gas, and considering that in the event of a leak, R290 refrigerant can accumulate at ground level creating a dangerous and explosive zone, it is mandatory to strictly respect the safety zones to prevent the gas from accumulating or coming into contact with ignition sources in case of a leak.

To avoid any risk and ensure air circulation through the evaporator and at the fan outlet, a danger zone has been delimited around the product, in which the following precautions must be taken into account:

- This area must not contain openings (doors, windows, ventilation grilles…), access to basements or sewer drains.
- The danger zone must not contain any source of ignition (switches, sockets, lamps, open flames, gas appliances…)
- The danger zone must not encroach on neighboring properties or public circulation areas.

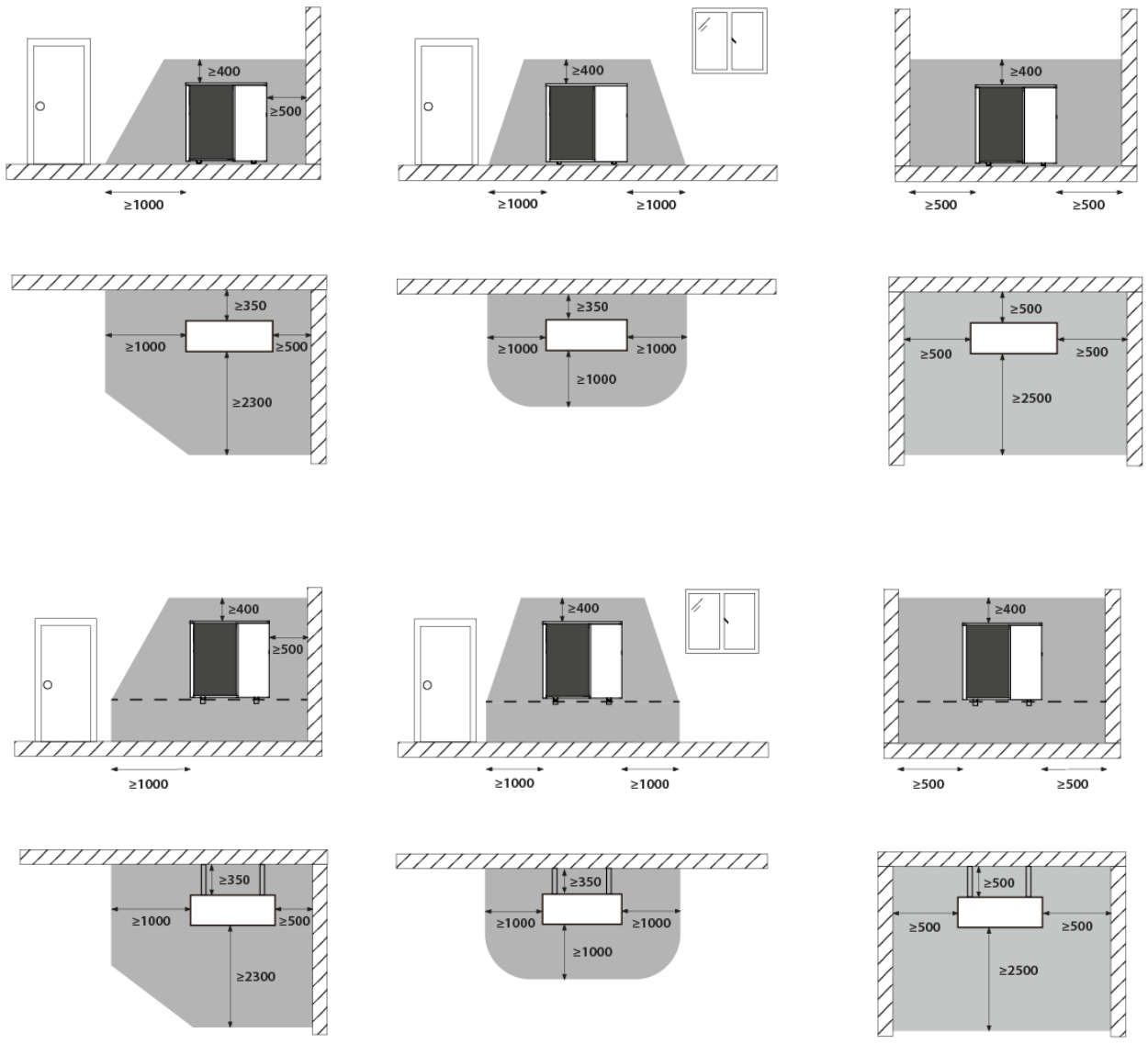

Delimited danger zone (mm).

If multiple units are installed in the same location, they must have large openings on all four sides, and the installation clearances shown in the following figure must be respected. No obstruction should impede airflow through the evaporator or at the fan outlet.

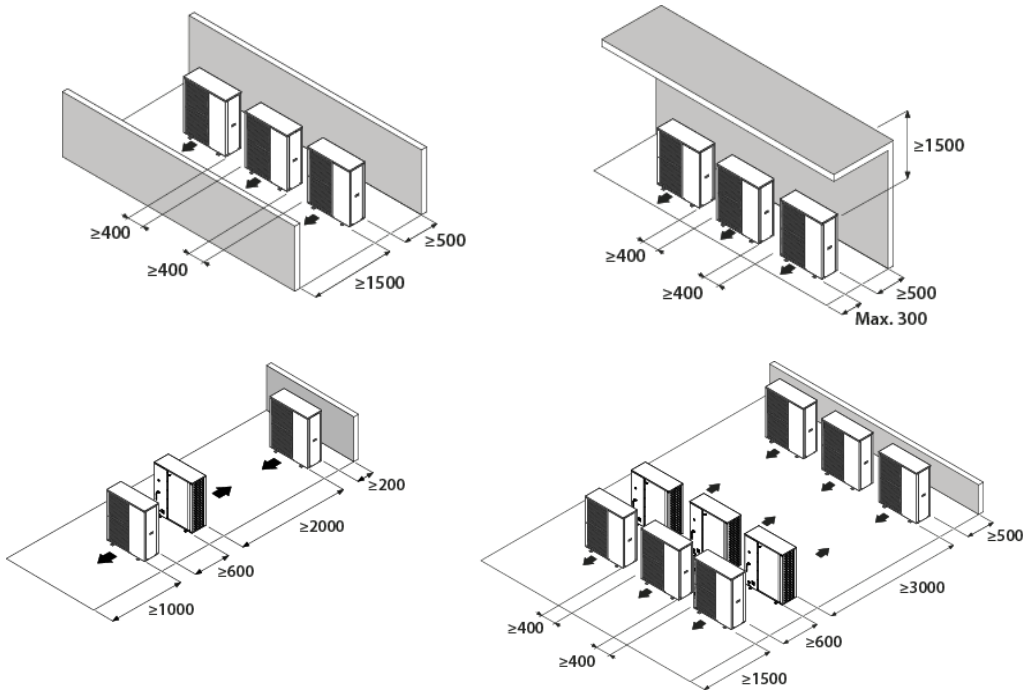

Minimum separations for installation of multiple units in the same location (mm).
Strictly necessary to ensure proper operation of the appliance, it may sometimes be essential to provide additional space for maintenance work.

The **DUAL CLIMA HT EC PRO** heat pump is an appliance specially designed for outdoor installation, but it should not be installed in locations where it could be exposed to major water spills or splashes (below a damaged gutter, near a gas outlet, etc.). Keep the appliance away from heat sources and flammable products.

In areas where heavy snowfall occurs, special care must be taken to protect the heat pump from any obstruction around it due to snow accumulation. The obstruction of the appliance's air inlet and/or outlet by snowdrifts could malfunctioning of the unit and possible breakdowns. The heat pump must be installed at least 100 millimetres above the maximum expected snow level. The roof must also be protected from snow accumulation by a roof overhang on the building or a similar structure.

6.3 Fixing the Heat Pump

The heat pump should be firmly fixed to a base, preferably a concrete base. Fix it firmly using 4 sets of M12 bolts suitable for the base material, with nuts and washers (available on the market). Make sure that the protruding distance of the bolt inside the metallic support of the appliance (leg) does not exceed 10 mm.

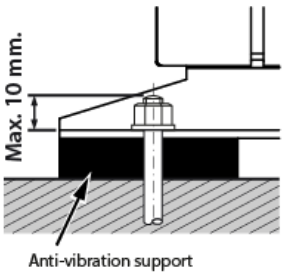

The receiving surface of the appliance must:

- Allow solid fixing (preferably concrete).
- Withstand a weight exceeding that of the appliance.
- Have a permeable area below the condensate drain hole (soil, gravel bed, sand, etc.).
- Not transmit any vibrations to the home. It is advisable to install the anti-vibration supports supplied with the heat pump.

If the appliance is installed on wall mounts it will be particularly important to insulate it against transmission of vibration and noise to the inside of the home, and anti-vibration supports better suited to the wall mount may need to be installed in addition to those supplied with the heat pump. However, installation on the ground is the most advisable.

Correctly level the heat pump to ensure the condensation water cannot run out of any area except the drain hole envisaged for this purpose.

6.4 Condensate Drainage

During normal functioning, large amounts of water may run off from the heat pump, and the **DUAL CLIMA HT EC PRO** heat pump is therefore equipped with two drain holes (**A**) on the underside of the appliance. Ensure these holes are not obstructed on installation of the appliance.

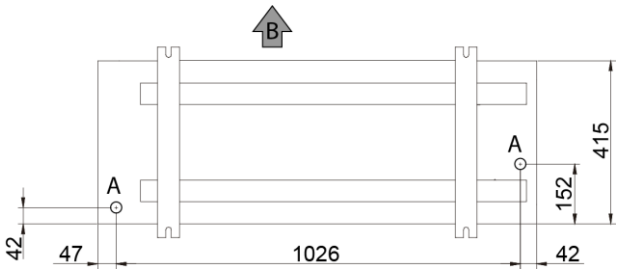

A: Condensate drain hole (view of underside of appliance).
B: Indication of front of appliance (discharge side).

The appliance should preferably be installed in a well-drained place. To do this, it is advisable to provide a bed of gravel, sand or similar materials below the drain hole. If the heat pump drain hole is covered by a mounting base or by the floor, raise the unit to leave a free space of at least 100 mm below it.

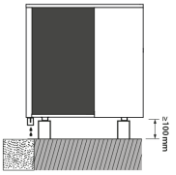

If it is installed on a terrace or façade, the condensate outlet must lead to a drain to avoid inconvenience and/or damage caused by dripping condensate water. If the installation is made in a region with long periods of sub-zero temperatures, check that there is no danger from frost.



6.5 Hydraulic installation

The hydraulic installation must be made by qualified personnel. Installation regulations must be followed, and the following recommendations must be taken into account:

- It is recommended to use piping appropriate for the installation to ensure the minimum flow rate in the hydraulic circuit.
- Before connecting the heat pump, a thorough internal cleaning of the system's pipes must be performed.
    - In new installations, it is mandatory to flush the entire system before final start-up to remove impurities (welding, oils, and sealants). Perform this flush without the circulation pump installed and then fill the circuit with clean mains water that meets the specified quality standards.
    - In existing systems, it is mandatory to drain and flush the current system to remove accumulated sludge and sediment. Flushing must be carried out in separate sections, ensuring sufficient flow to remove dirt, especially in low-circulation "blind spots." After flushing, fill the system with clean mains water that meets the specified quality standards.

NOTE: The use of additives, such as corrosion inhibitors or antifreeze, must always be carried out with prior approval from the supplier/manufacturer. It is essential to

	Ø	6HT	9HT	12HT 12HTT	16HT 16HTT	19HT 19HTT	22HTT	Lenth to be subtracted for each 90º elbow
Copper pipe	18	40m	13m	5m				1m
	22		40m	16m	11m			1,2m
	28			60m	40m	8m		1,6m
	35					26m	6m	2m
	42					66m	16m	2,4m
	54						58m	3m
Polypropylene pipe	20	19m	7m					0,7m
	25	58m	19m	8m				0,9m
	32		70m	28m	18m			1,2m
	40				56m	11m		1,5m
	50					33m	8m	1,8m
	63						26m	2,3m
Multilayer pipe	20	32m	11m	4m				1,7m
	25	98m	34m	14m	9m			2,1m
	32			50m	33m			2,7m
	40					24m	6m	3,6m
	50					62m	15m	4,3m
	63						45m	5,1m

ensure the chemical compatibility of the product with the heat pump to avoid technical damage and loss of the equipment warranty.

• All the water circuit pipes **MUST** be insulated to prevent condensation from forming during cooling mode functioning and the subsequent reduction of cooling and heating capacity, and to prevent the external pipes from freezing in winter. The minimum insulation thickness of the pipes must be 19 mm (0.039 W/mK), preferably comprising closed cell insulation or a vapour barrier. In outdoor areas exposed to the sun, the insulation must be protected from the effects of its degradation.

• For the correct operation of the heat pump, you must ensure that the pipes do not exceed maximum lengths for each model. If these lengths are exceeded, the heat pump may have operating problems and generate various alarms and lockouts. Depending on the **DUAL CLIMA HT EC PRO** model and the type of pipe installed, these values will be:

These lengths correspond to the total length of the heat pump piping, considering both the going and the return to the installation.

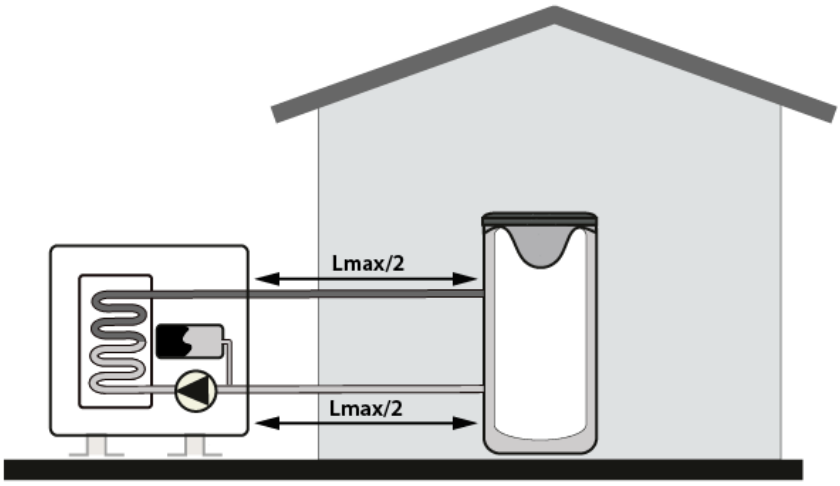

Lmax= Maximum length of installation pipe indicated.

IMPORTANT: It must be taken into account that any element added to the installation, such as filters, 3-way valves... will reduce this maximum available distance due to the pressure loss they generate in the installation.

- We recommend inserting cut-off valves between the installation piping and the heat pump to simplify maintenance tasks.
- Leave a free space around the heat pump for carrying out any maintenance and repair operations (see *"Location"*).
- Air vent valves and suitable devices for correctly bleeding the air from the circuit during the water filling stage should be fitted.
- Install all the necessary safety elements in the installation (expansion tank, safety valve, etc.) to comply with the required installation standards.
- A **water filter** must be installed in the heat pump water circuit to prevent obstruction or narrowing of the pipes due to dirt in the installation. The filter **MUST** be installed before filling the installation with water, on the appliance's return line, to prevent dirty water from entering the heat exchanger (capacitor). The type of filter installed must be adapted to the particular characteristics of each installation (type and material of the water pipes, type of water used, water volume of the installation, etc.). The water filter must be checked at least once a year and cleaned if necessary, although in new installations it is recommended to check it a few months after commissioning.
- For correct functioning of the heat pump, a minimum volume of water in the installation and a minimum flow in the appliance's hydraulic circuit must be ensured. If the minimum flow in the heat pump is not reached it could have operating problems and trigger different alarms and stoppages. These values are as follows, depending on the **DUAL CLIMA HT EC PRO** model installed:

DUAL CLIMA	6HT	9HT	12HT/HTT	16HT/HTT	19HT/HTT	22HTT
Minimum volume (l)	34	40	48	60	80	80
Minimum flow rate (l/min)	12	15	16	20	24	26

- If the water volume in the installation is lower than this value, install a buffer tank in the heating/air conditioning circuit. To prevent condensation from forming and premature

deterioration of the buffer tank, make sure all the hydraulic sockets and connections are correctly insulated, particularly when it is to be used in Cooling mode.

- In multi-zone installations managed by thermostatic shut-off valves or similar, a system for maintaining the aforementioned minimum flows even when all the zones are closed must be provided (bypass valve, etc.).

6.6 Heating Water Specifications

Before filling the primary circuit, it is mandatory to verify the suitability of the water. It must be free of suspended particles or contaminants (welding residue, rust scale, sludge, or scale).

It is essential that the properties of the fill water conform to the technical parameters detailed in the following table to guarantee the service life of the heat pump:

Specification	Value
Hydrogen potential (pH)	7,5-9
Conductivity at 20 °C	< 500 µS/cm
Chlorides	Less than 50 mg/l
Total hardness	20 ºfH
	11,2 ºdH
	2,0 mmol/l
Sand	<10 mg/l, 0.1 to 0.7 mm maximum diameter
Ferrite hydroxide Fe_2O_4 (black)	Dosage <7.5 mg/l, 50% by mass, with a diameter <10 µm
Iron oxide Fe_2O_3 (red)	Dosage <7.5 mg/l, diameter <1 µm

6.6.1 Installing a DHW tank

The **DUAL CLIMA HT EC PRO** heat pump may (optionally) be installed together with a tank for Domestic Hot Water production. Among its aerothermics accessories, **DOMUSA TEKNIK** offers a full range of hot water tanks specially designed for use in combination with **DUAL CLIMA HT EC PRO** (the **Sanit HE**, **BT-Trio** and **BT-Duo HE** ranges). The hydraulic installation of the hot water tank must be made by qualified personnel, in accordance with the applicable installation legislation and the attached tank instructions.

To combine a DHW tank with the heat pump, insert the DHW temperature sensor supplied with the heat pump inside the appliance into the hot water tank bulb-holder. Also, a 3-way deflector valve (**G1**) must be installed between the external appliance and the DHW + Heating/Air Conditioning installation, so that the electronic control can divert the water in the installation to either DHW production or the Heating/Air Conditioning installation, depending on whether there is DHW demand.

Dc: **DUAL CLIMA HT EC PRO** heat pump.

Ac: **Sanit HE** hot water tank.

Sa: DHW tank sensor.

G1: 3-way diverter valve.

E1: Backup DHW element.

Ic: Heating/Air Conditioning installation.

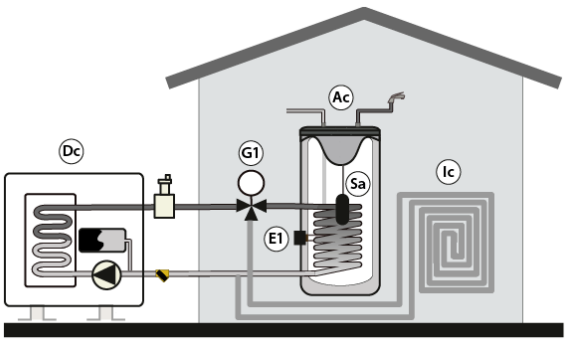

A backup element may also optionally be installed (**E1**).

Likewise, as an alternative to the backup heating element, a conventional energy source (such as a gas or oil-fired boiler) can optionally be connected to the **DUAL CLIMA HT EC PRO** heat pump to back up DHW production, via the same electrical connection (**E1**). The DHW tank must therefore be equipped with an auxiliary pipe and/or an intermediate heat exchange system allowing hydraulic connection of this backup energy source. Among its aerothermics accessories, **DOMUSA TEKNIK** offers the range of **Sanit HE DS**, hot water tanks, which include an auxiliary pipe on their upper part and are specially designed for use in combination with **Dual Clima HT EC PRO**.

Dc: **DUAL CLIMA HT EC PRO** heat pump.

Ac: **Sanit HE DS** hot water tank.

Sa: DHW tank sensor.

G1: 3-way diverter valve.

E1: **DOMUSA TEKNIK** backup boiler.

Ic: Heating/Air Conditioning installation.

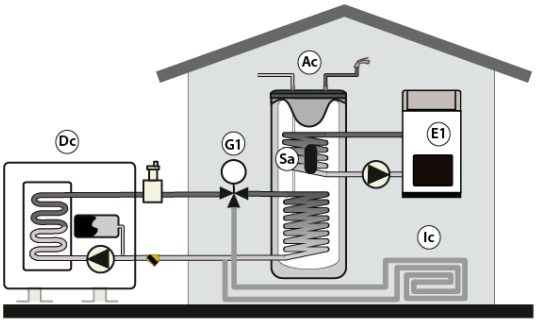

The electrical installation of the DHW tank sensor, the 3-way valve (**G1**), and the backup element (**E1**), are made in the terminal strip in the indoor modules **Easy Connect** (see *"Indoor module installation instructions"*).

6.6.2 Installing a buffer tank

The **DUAL CLIMA HT EC PRO** heat pump can be installed in conjunction with a buffer tank (optional). Among its range of air source energy accessories, **DOMUSA TEKNIK** offers an array of buffer tanks that are especially designed for installation in conjunction with **DUAL CLIMA HT EC PRO** heat pumps (**BT, BTS, BT-Duo HE** and **BT-Trio**). The hydraulic installation of the buffer tank must be carried out by qualified personnel and in compliance with current installation regulations (RITE) and the instructions provided with the tank.

The electronic control unit of the **Easy Connect** indoor module has a specific function to manage buffer tank Heating and Cooling (see *"Operation with the buffer tank"*). This requires a temperature sensor to be inserted in the immersion sleeve of the buffer tank. The buffer tank temperature sensor is **not** supplied with the **DUAL CLIMA HT EC PRO** heat pump, so it must be purchased from **DOMUSA TEKNIK**. If the user wishes to install a DHW storage tank along with the buffer tank, a 3-way diverter valve (**G1**) must be installed between the outdoor unit and the DHW installation + a buffer tank so the electronic control unit can divert the water in the installation to DHW production or to the buffer tank, depending on whether DHW is required. The figure below shows an example of the installation of a buffer tank along with a DHW storage tank:

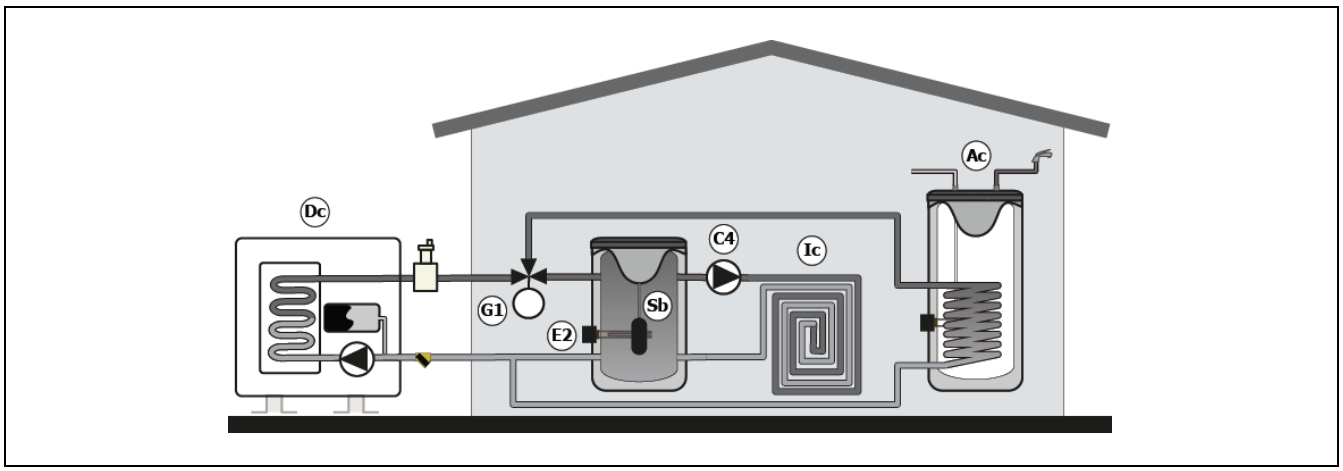

Dc: Outdoor unit **Dual Clima HT EC PRO**.

Ac: DHW tank.

Sb: Buffer tank sensor.

G1: DHW 3-way valve.

E2: Heating backup source.

C4: Heating/Cooling installation pump.

Ic: Heating/Cooling installation.

Optionally, a backup heating element (**E2**) can be installed in the tank.

The wiring of the temperature sensor (**Sb**), the 3-way diverter valve (**G1**), the installation's circulation pump (**C4**) and the backup heating element (**E2**) must be connected to the terminal strips of the **Easy Connect** (indoor module (see *"Instructions for the installation of the indoor module"*).

The buffer tank management function of the **Easy Connect** indoor module electronic control unit also automatically manages operation of the heating/cooling installation installed downstream from the buffer tank (see *"Operation with buffer tank"*). Up to 2 types of hydraulic circuits can be managed, depending on the selected room temperature device:

<u>Room temperature sensor control</u>

In this installation a water circulation pump is installed between the buffer tank and the heat/cold outlets of the circuit and connected to the **C4** output of the indoor module (see *"Connecting the C4 installation pump"*), as well as a room temperature sensor installed inside the home and connected to the **T2** input of the indoor module (see *"Connecting the room temperature sensor"*). The electronic control unit will manage the operation of the **C4** circulation pump, depending on the temperature registered by the room sensor (see *"Operation with room sensor"*).

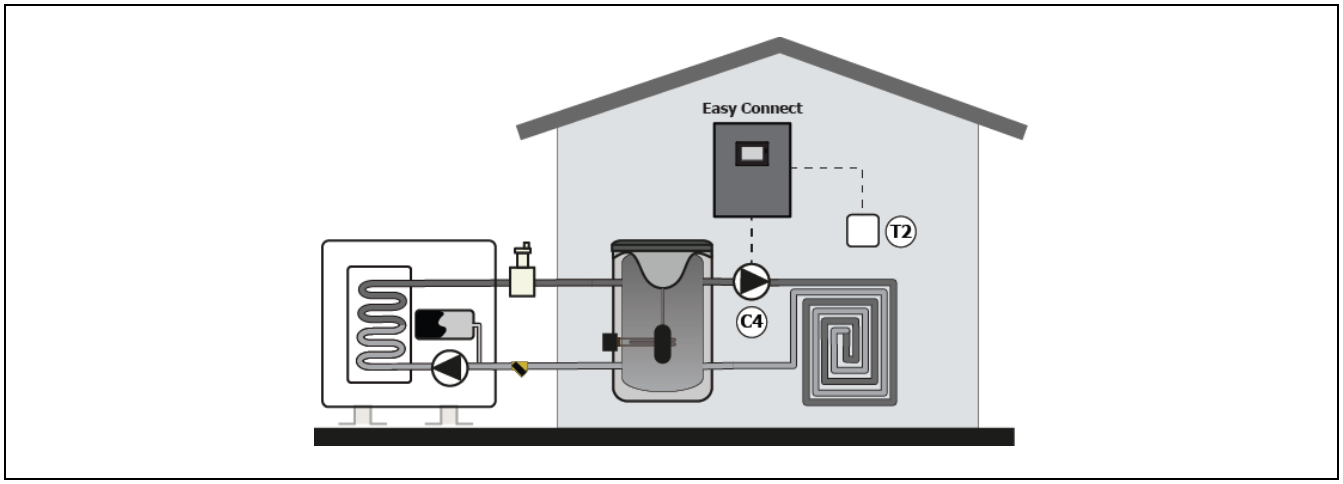

Room thermostat TA1 and/or TA2 control

In this type of configuration, the electronic control unit is used to manage heating or cooling of up to 2 separate Heating/Cooling zones. This installation consists of 2 water circulation pumps installed between the buffer tank and the heat/cold outlets of each heating/cooling zone and connected to the **Z1** and/or **Z2** outputs of the indoor module (see *"Connecting the Z1 and/or Z2 installation pumps"*), as well as up to 2 room thermostats installed inside the home and connected to the **TA1** and/or **TA2** inputs of the indoor module (see *"Connecting the TA1 and/or TA2 room thermostats"*). The electronic control unit will use the signal received at inputs **TA1** and/or **TA2** of the indoor module to activate or deactivate operation of circulation pumps **Z1** and/or **Z2**, respectively.

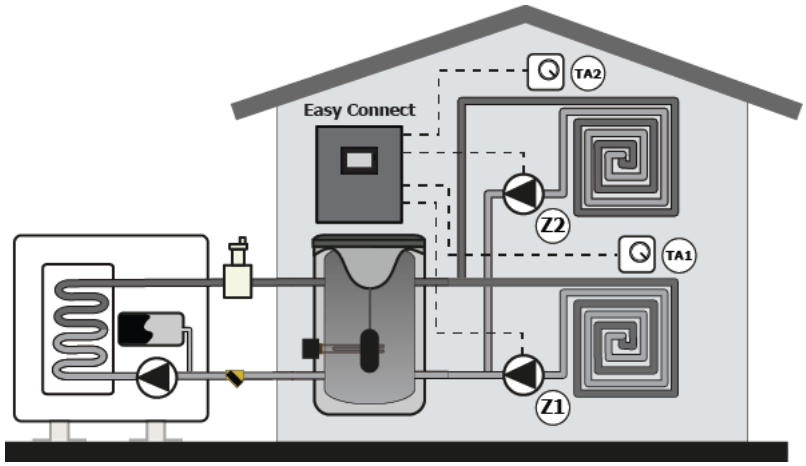

6.6.3 Filling the installation

The hydraulic installation must include a filling valve, air vents valves and the necessary hydraulic components for correctly filling it.

To fill the heat pump, open the fill valve until the manometer on the rear of the appliance shows a pressure of 1 - 1.5 bars. The heat pump has an automatic air vent (**A**) incorporated to the upper part of the flow pipe of the heat exchanger (capacitor), which must be opened during the filling process. The air should also be bled from the rest of the installation using the air bleed valves provided. The installation must be filled slowly to facilitate air evacuation from the water circuit. Close the fill valve after filling. To comfortably access the heat pump air vent valve, open side and top panels of the heat pump.

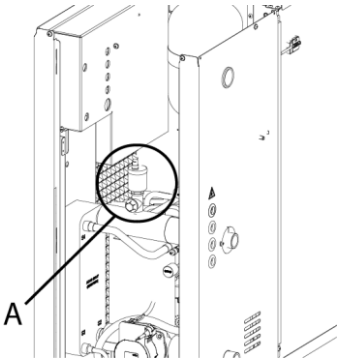

IMPORTANT: Switching on the heat pump with no water inside could result in serious damage.

6.6.4 Drainage

A blow-off valve is supplied with the **DUAL CLIMA HT EC PRO** heat pump, which must be fitted to the drain socket (**B**) provided in the lower part of the rear of the appliance. This valve is opened to drain the water from heat pump. To do this, connect a flexible tube (**C**) to the valve and run it to a drain. To ensure the heat pump is completely drained we recommend opening the automatic air vent (**A**) inside the heat pump, so that air enters the circuit. After draining the boiler, close the valve again and remove the flexible tube.

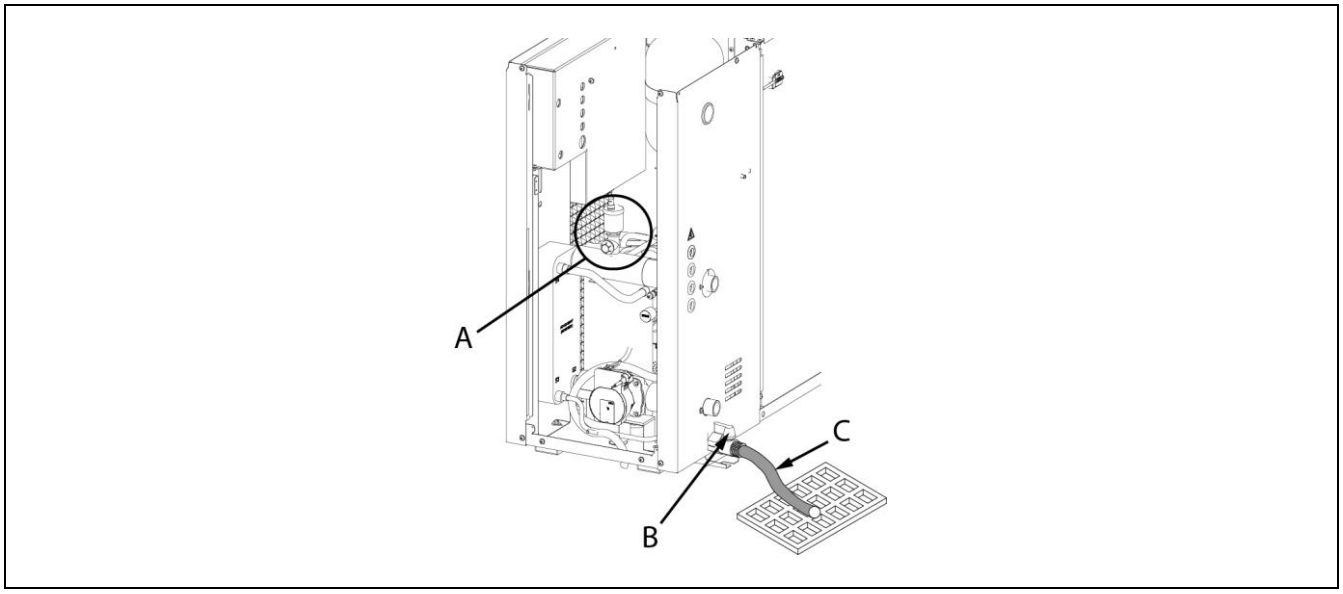

6.6.5 Installing a degasifier

The **DUAL CLIMA HT EC PRO** heat pump contains R290 refrigerant gas. In case of leakage, this gas can be highly flammable and safety precautions must therefore be taken. An additional safety system must be installed to prevent the gas from entering the installation in case of leakage. **DOMUSA TEKNIK will not be liable for any damages caused by failing to have a safety system in place for refrigerant leakage.**

DOMUSA TEKNIK advises installing a degasifier in the heat pump water circuit. If leakage occurred in the plate heat exchanger, the gas in the refrigerant circuit would be removed by the degasifier, avoiding gas accumulation in the water circuit. This degasifier must be installed in the Heating/Air Conditioning flow circuit (**IC**) (See *Diagrams and Measurements*). For further details, please carefully read the instructions supplied with the kit.

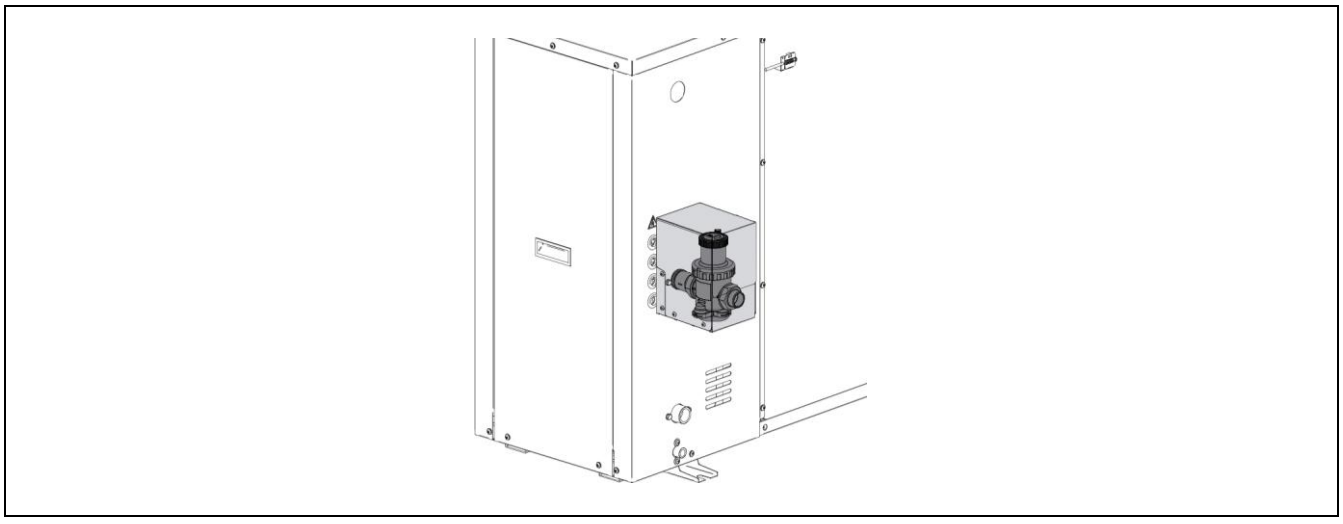

6.7 Outdoor unit electrical connections

The electrical installation of the **DUAL CLIMA HT EC PRO** heat pump and its electrical accessories must be made by qualified personnel, in accordance with the applicable installation legislation. The electrical installation must be connected so that the heat pump can be fully isolated and disconnected for the safe execution of any maintenance operations.

The electrical installation of the **DUAL CLIMA HT EC PRO** will **only** consist of connecting it to the general electrical supply network and at the same time connecting a 2 wire communication cable between the outdoor unit and the indoor module of communication **Easy Connect** (see *"Indoor module installation instructions"*). The rest of devices and electrical accessories of the installation (diverter valves, optional sensors, room thermostats, backup devices,…) must be connected to the terminal strip of the indoor module **Easy Connect**.

There are cable holes (**D**) on the rear of the appliance for running the hoses through to the inside. Cables exposed to external weather conditions should be protected by cable ducts or protective tubes or should be of a suitable category for use outdoors (H07RN-F hoses or higher). It is also advisable to maintain a minimum distance of 25 mm between the electrical supply cable and the communication cable, running them through independent tubes.

Also, to insert the cables in the junction box, the cable ducts (**E**) incorporated to the rear of the box must be used.

IMPORTANT: Ensure that the junction box is totally sealed after making all the electrical connections.



The **DUAL CLIMA HT EC PRO** heat pump is designed to be connected at 230 V~ 50 Hz o 400 V ~ 50 Hz (depending on the model is monophasic or triphasic) at the terminals shown in the figure (see *"Electrical Diagrams"*). The power supply terminals are located inside the appliance. To access them, open the front panel and access the front electronic cards. **Remember to earth the appliance.**

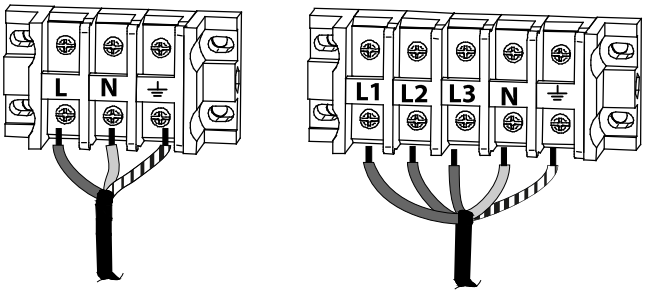

230 V~ 50 Hz 400 V 3N~ 50 Hz

The cable dimensions must comply with the applicable laws and regulations at all times. However, the table below shows some recommended characteristics and dimensions, for guidance:

		Maximum consumption (A)	Minimum cable diameter (mm^2)	Recommended fuse	Recommended hose
DUAL CLIMA 6HT PRO	230 V~ 50 Hz	12	2,5	16A	H05VV-U3G (in protective tube)
DUAL CLIMA 9HT PRO		14	2,5	16A	
DUAL CLIMA 12HT PRO		18	4	25A	
DUAL CLIMA 16HT PRO		27	6	32A	
DUAL CLIMA 19HT PRO		31	10	40A	
DUAL CLIMA 12HTT PRO	400 V 3N~ 50 Hz	6	2,5	16A	H05VV-U5G (in protective tube)
DUAL CLIMA 16HTT PRO		9	2,5	16A	
DUAL CLIMA 19HTT PRO		14	2,5	16A	
DUAL CLIMA 22HTT PRO		16	4	25A	

The electrical connection of the heat pump must be protected by an earth leakage circuit breaker (a high-speed switch of 30 mA (<0.1 s)).

IMPORTANT: Before carrying out any work on the heat pump electrical installation, ensure it is disconnected from the mains.

IMPORTANT: The cable diameter indicated in the table above is for guidance purposes only, as it depends on the type of cable and installation. In any case, ensure the local regulations are complied with.

6.8 Freeze Protection

The **DUAL CLIMA HT EC PRO** is an appliance for installation on the outside of the building and it will consequently be exposed to frost during periods of extremely cold weather. Freeze protection is therefore of the utmost importance for this type of appliance, as its internal construction and the amount of water contained in it make it even more prone to freezing. If the water inside the heat pump freezes it can cause the heat exchanger to break, stopping its functioning and making costly repairs necessary.

It is therefore **compulsory** to use an anti-freeze system in the installation to prevent the water in the units from freezing. **DOMUSA TEKNIK** recommends using one of the following systems:

- **Anti-freeze liquid (Glycol):** The antifreeze liquid must be diluted with the water inside the heat pump. The concentration of glycol in the mixture must be calculated taking into account the historical minimum temperature of the climatic zone where the machine is located and the concentrations indicated by the glycol manufacturer for this minimum temperature. It is also essential to regularly check the water-glycol mixture to ensure its properties and correct mixture percentage are maintained over time (at least once a year).
- **Outdoor anti-freeze valve:** The anti-freeze valve(s) must be installed on the heat pump water circuit, preferably inside the heat pump. You **must ensure** that when they are activated they drain all the water from inside the appliance. The **DUAL CLIMA HT EC PRO** heat pump has two sockets for connecting two anti-freeze valves. **DOMUSA TEKNIK** offers the option of an anti-freeze valve kit, specially designed for installation on the **DUAL CLIMA HT EC PRO** heat pump.

In addition to these active anti-freeze safety systems, a water filter must be installed in the heat pump water circuit to prevent obstruction or narrowing of the pipes due to dirt in the installation, which would speed up the freezing process or cause the water drainage devices to malfunction. The filter **MUST** be installed before filling the installation with water, on the appliance's return line, to prevent dirty water from entering the heat exchanger. The type of filter installed must be adapted to the particular characteristics of each installation (type and material of the water pipes, type of water used, water volume of the installation, etc.). The water filter must be checked at least once a year and cleaned if necessary, although in new installations it is recommended to check it a few months after commissioning.

DOMUSA TEKNIK's guarantee does not cover any damage caused by failing to use any of the freeze protection systems described above.

In installations where glycol has not been added, in case of prolonged periods of absence the water must be drained from the appliance in order to prevent accidental power failures and/or heat pump failure. During periods of frost, a power outage of 30 minutes or more may cause the water to freeze.

The **DUAL CLIMA HT EC PRO** heat pump's electronic control has a function for protecting the water inside it from freezing during periods of frost. **For this function to remain enabled and on standby, the heat pump must be connected to the mains and have a power supply, even when it is switched off or not in use.**

The anti-freeze function will start up the circulation pumps, the compressor and other system components according to the temperature conditions it detects, both of the water and outside the home. The following sections describe the functioning of the **DUAL CLIMA HT EC PRO** heat pump's anti-freeze process.

6.8.1 DHW mode anti-freeze process

When the temperature of the Domestic Hot Water tank falls below +5ºC, the system starts up the anti-freeze function, enabling DHW mode and activating circulation pumps (**C1** and **C3**) the compressor and backup output **E1**. When the water temperature in the tank reaches 15ºC, the function stops. If the heat pump stays on for more than 30 minutes without reaching the indicated temperature, the DHW anti-freeze function will stop.

If the DHW temperature continues to be lower than 5ºC when the anti-freeze process is complete, the heat pump will stop and an error code will appear on the display.

6.8.2 Heating/Cooling mode anti-freeze process

When the heat pump water temperature falls below **P25** (5ºC by default) in the System Parameters (see *Settings Menu*), detected on either flow or return, the system starts up the anti-freeze function, activating the water circulation pumps (**C1** and **C2**). If the external temperature is below 15ºC, the heat pump will also be started up. When the water temperature reaches 10ºC or the heat pump has been running for more than 30 minutes without having reached this temperature, the anti-freeze function will stop.

If the flow or return temperature continues to be lower than **P25** when the anti-freeze process is complete, the heat pump will stop and an error code will appear on the display.

Also, if the external temperature falls below 0ºC at any time, the water circulation pumps (**C1** and **C2**) will start up within a time interval defined in **P21** for one minute.

IMPORTANT: It is compulsory to use an anti-freeze system in the installation to prevent the water in the units from freezing.

IMPORTANT: We do not recommend changing parameters P25 and P21. Incorrectly setting these parameters could cause failure or breakdown of the appliance.

NOTE: For the anti-freeze function to remain enabled and on standby, the Easy Connect indoor module must be connected to the mains and have a power supply.

DOMUSA TEKNIK's guarantee does not cover any damage caused by failing to use a freeze protection system in the installation.

7 INDOOR MODULE INSTALLATION INSTRUCTIONS

7.1 Accessories Supplied

The following accessories are supplied inside the **Easy Connect** indoor module. Before installing the appliance, make sure none of these accessories are missing or damaged.



Documentation: Include all the necessary manuals and documents for using and installing the indoor module.



Fixing accessories: Include 4 screws and 4 raw plugs, to fix the module to the wall. It the screw and raw plugs are not appropriate for the typology of the wall, use appropriate ones.

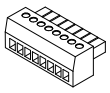

Control panel connector: In addition to the fixing accessories, an 8 way connector is also provided to connect the control panel to the Easy Connect communication module. For a correct installation read *"Connecting the control panel"*.



Control panel connection cable: A 5 meters cable is provided to connect the outdoor unit to the Easy Connect communication module. For a correct installation read *"Indoor module installation instructions"*.

7.2 Location

The **Easy Connect** communication module must be installed inside the home, at a location that is well-ventilated and insulated from humidity. **Access to the front of the module is essential**, so it cannot be installed where any obstacle can impede this access.

There are 4 self-tapping screws and 4 wall fittings supplied with the remote control for wall mounting. If the self-tapping screws and wall fittings are not suitable for the selected type of wall, use suitable ones. Fasten the screws to the wall according to the instructions shown in the figure, hang the module from the holes at the rear in the position shown in the figure (with the cable feed at the bottom) and tighten the screws from the inside of the module to secure the module on the wall.

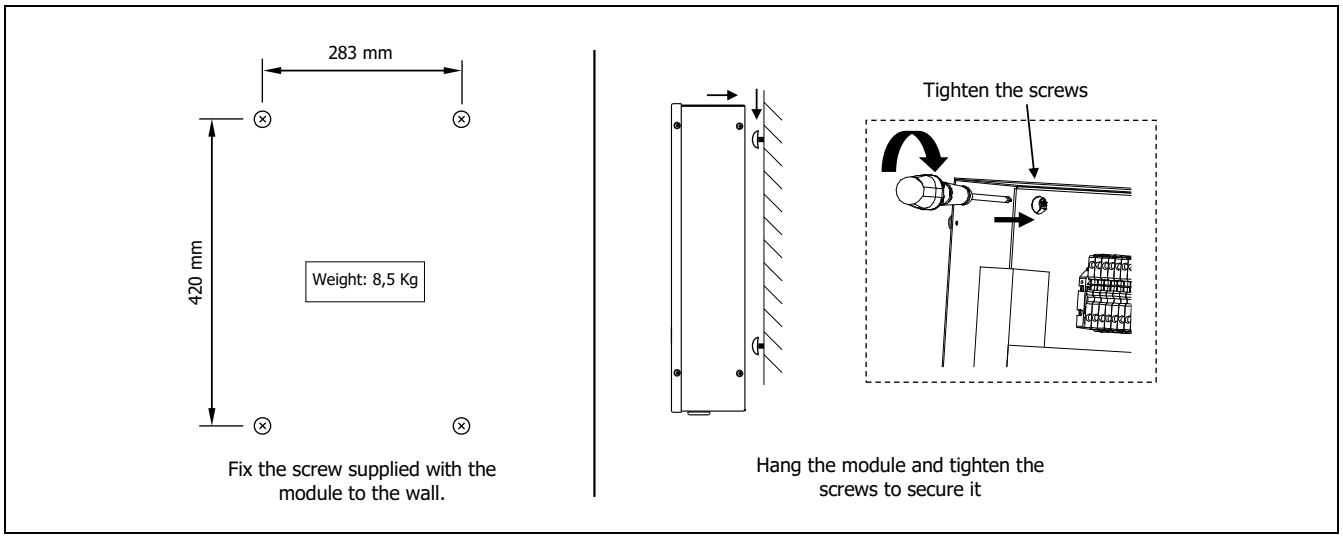

7.3 Electrical connections

The electrical installation of the **Easy Connect** module and its electrical accessories must be made by qualified personnel, in accordance with the applicable installation legislation. The electrical installation must be connected so that the heat pump can be fully isolated and disconnected for the safe execution of any maintenance operations.

There are cable holes on the bottom of the module for passing hoses and cables for their connection inside. The cables exposed to outdoor weather conditions must be protected by protective conduits or pipes must be of the appropriate category for outdoor use (type H07RN-F hoses or higher). In turn, it is advisable to maintain a minimum distance of 25 mm between voltage cables (general power supply, diverter valves, support resistors, circulation pumps, etc.) and communication and sensor cables (communication cable between units, temperature probes, ambient probe, etc.), conducting them through independent pipes.

IMPORTANT: Whenever working on the electrical installation, ensure that it is disconnected from the mains.

7.3.1 Indoor module electrical connections

The **Easy Connect** module is ready to be connected electrically to the 230 V~ 50Hz voltage at terminals **L** and **N** on the connections strip. **The equipment must be connected to ground.**

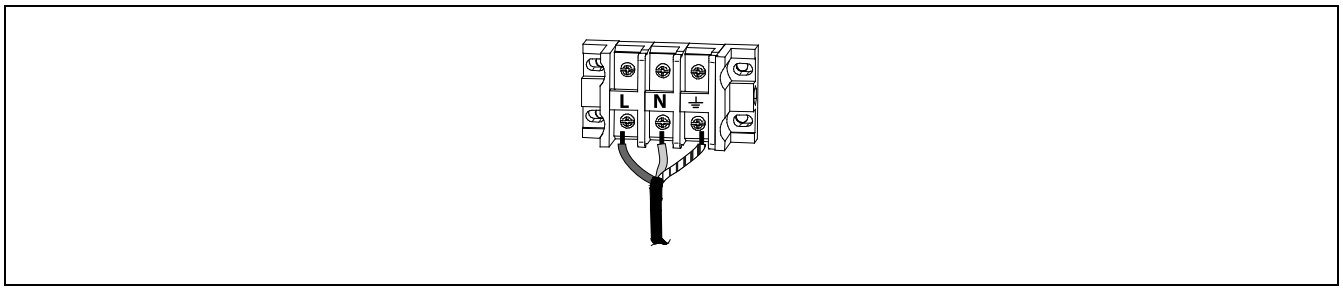

The maximum consumption of the electronic card in the **Easy Connect** module is **5 A**; therefore, **total maximum electrical consumption of all the electrical accessories that are connected cannot exceed that amount**. In addition, the total maximum electrical consumption of all the connected accessories (backup heating elements, circulation pumps, diverter valves, etc.) must be taken into account to calculate the cable sections of the module's main power supply, as well as the fuses and circuit breakers protecting the electrical installation. The dimensions of the power supply cables must comply with current standards and regulations.

IMPORTANT: Before carrying out any work on the heat pump electrical installation, ensure it is disconnected from the mains.

7.3.2 Connection to the outdoor unit

To ensure proper operation, the **Easy Connect** communication module must be connected to the **DUAL CLIMA HT EC PRO** outdoor heat pump unit by a 2-wire communications cable.

The connection is made between the **RS485 A(1)** and **B(2)** yellow terminals of the **X1** inputs strip of the **Easy Connect** communications module and the **RS485 A(22)** and **B(21)** terminals of the **DUA CLIMA HT EC PRO** outdoor unit connections strip. The communications cable between the outdoor unit and the indoor module should not be more than 100 meters long (cable section between 0.25 ÷ 1.25 mm^2). The cable should be connected according to the poles shown on the terminals; i.e., terminal **A** of the module to terminal **A** of the outdoor unit and the same for the **B** terminals, as shown in the following figure:

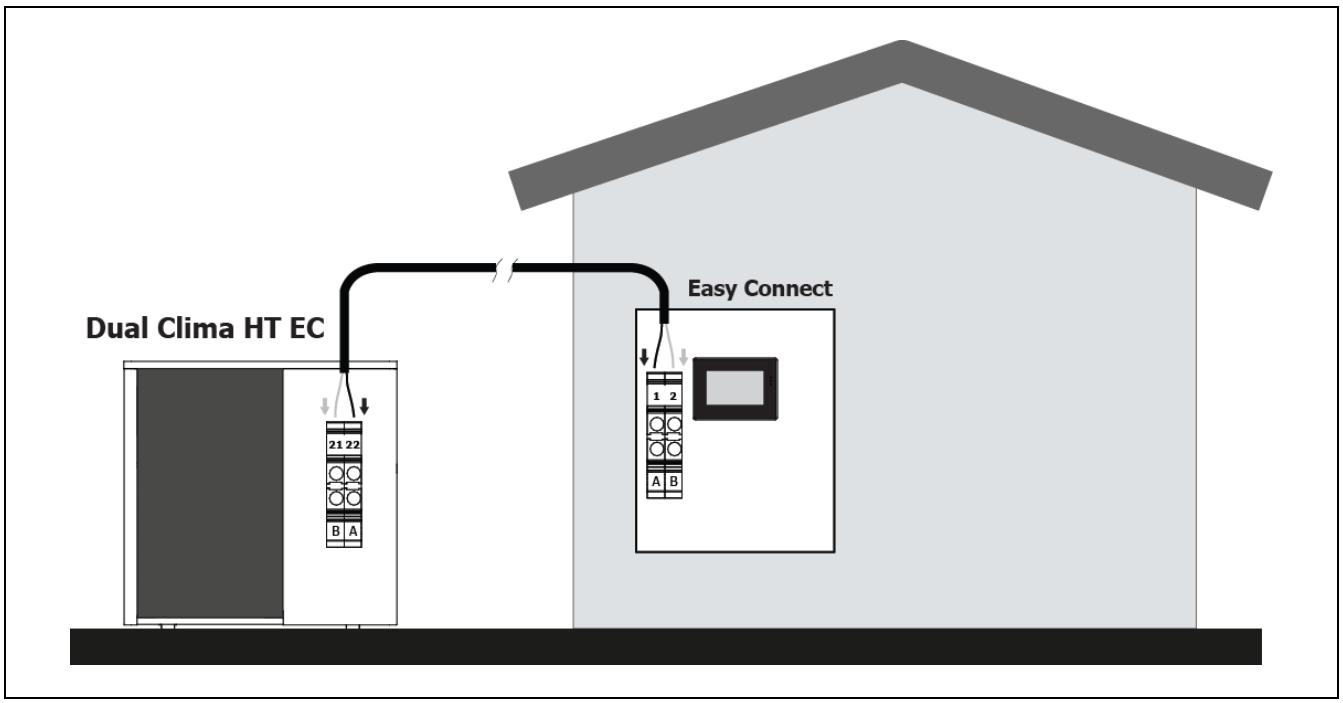

IMPORTANT: It is essential to connect the cables to the same terminal poles on both the Easy Connect indoor module and the DUAL CLIMA HT EC PRO outdoor unit.

7.3.3 Connecting the control panel

The control panel is supplied inside the **DUAL CLIMA HT EC PRO** outdoor unit and must be connected to the **Easy Connect** communications module before it is switched on. To do this, first detach the panel from the outdoor unit and mount it inside the home or directly in the front cover of the **Easy Connect** module. For easier assembly inside the home, **DOMUSA TEKNIK** provides an optional accessory to mount it on a wall.

To mount the control panel on the communications module, first knock out the pre-cut window on the front cover to remove it. Then insert the panel in the window and fasten it on the front cover by turning and tightening the flanges at the rear.

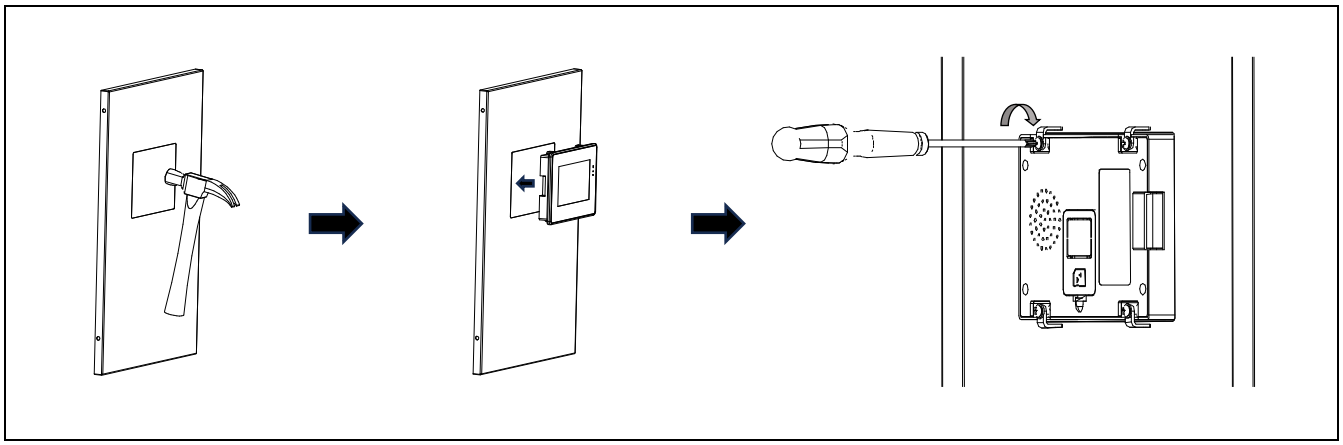

Once the panel is in place, pass the connection cable supplied with the communications module from the module to the panel and connect the end to the white "**COMM4**" terminal of the indoor module's electronic card. After this, connect the green 8-wire connector to the rear of the control panel, as shown in the following figure:

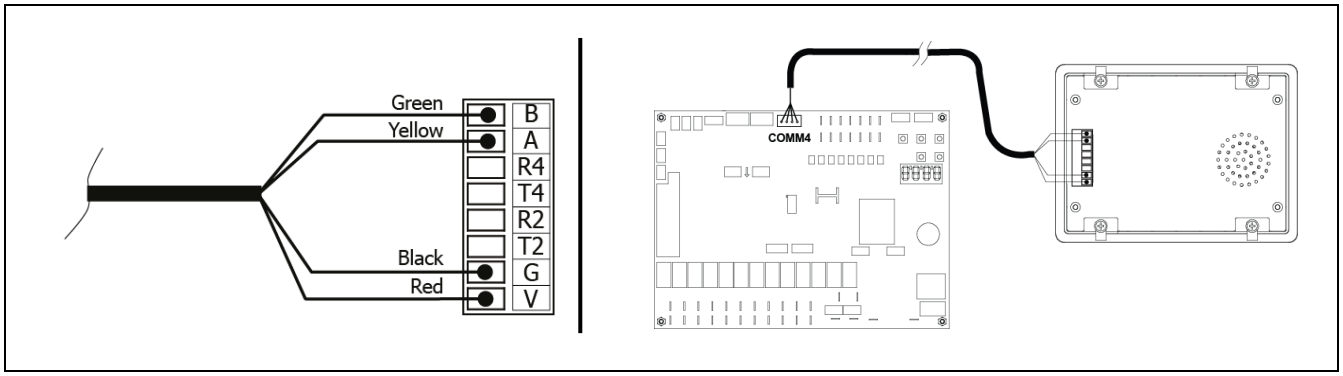

The cable supplied with the indoor module is 5 meters long. If necessary, it can be extended to a maximum distance of 50 meters (cable section between 0.25 ÷ 1.25 mm^2).

IMPORTANT: Whenever any work is done on the electrical installation, make sure it is disconnected from the main electrical supply network.

7.3.4 Connecting the iConnect module

The **iConnect** connectivity module is supplied inside the **Easy Connect** unit. The module includes 2 cables for the electrical connection; one for electrical power and the other for communication with the indoor unit (**COMM**).

The **iConnect** module is prepared for connection to 230 V~ 50Hz voltage. The electrical connection can be made to terminals **L** and **N** of the connections strip on the **Easy Connect** unit or to any point in the home's electrical network.

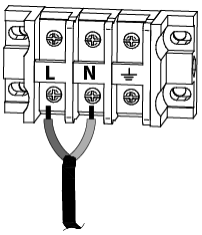

Communication between the **Easy Connect** indoor unit and the **iConnect** module is made by connecting the communications cable identified as **COMM**, which is already connected inside the module. The other end of the cable must be connected to terminals **A+** and **B-** of the green **COMM2** connections strip in the electronic control board of the indoor unit. **Make sure the poles match** when making the connection; the **brown** wire must be connected to terminal **A+** and the **white** wire to terminal **B-**, as shown in the following figure:

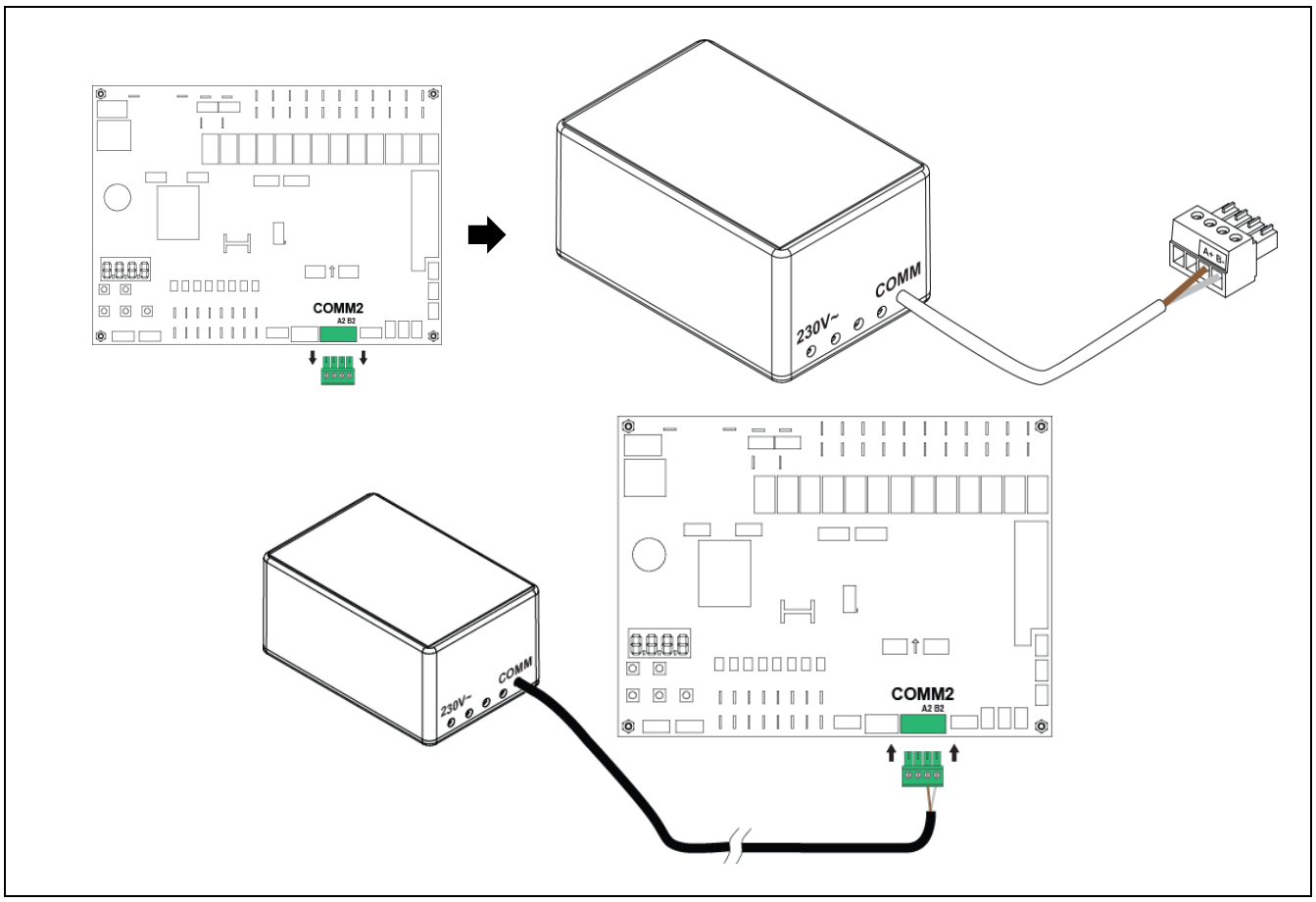

The cables supplied with the **iConnect** module are 5 metres long. These can be extended if necessary. The communications cable between the indoor unit and the **iConnect** module should not be more than 100 meters long (cable section between 0.25 ÷ 1.25 mm^2).

If the user wishes to use the **iConnect** module to connect to the Internet and operate the installation remotely using the **iConnect** mobile phone application, the home must be equipped with a **Wifi** network and the **Wifi** signal must be strong enough where the module is installed.

IMPORTANT: Whenever any work is done on the electrical installation, make sure it is disconnected from the main electrical supply network.

7.3.5 Connecting a DHW sensor

When installing an DHW tank in combination with the heat pump, a temperature sensor must be installed in the hot water tank. This sensor carries out the electronic control of the heat pump, managing the domestic hot water temperature by activating DHW mode when the water in the tank falls below the desired temperature.

A DHW sensor is supplied with the **DUAL CLIMA HT EC PRO** heat pump. This sensor is in the documentation bag inside the appliance. The sensor is connected to the electrical terminals **T13 (19 and 20)** on the input terminal strip **X1** in the **Easy Connect** indoor module. The sensor supplied with the heat pump is 5 meters long. If necessary, it can be extended to a maximum distance of 20 metres (diameter between 0.25 and 1.25 mm^2).

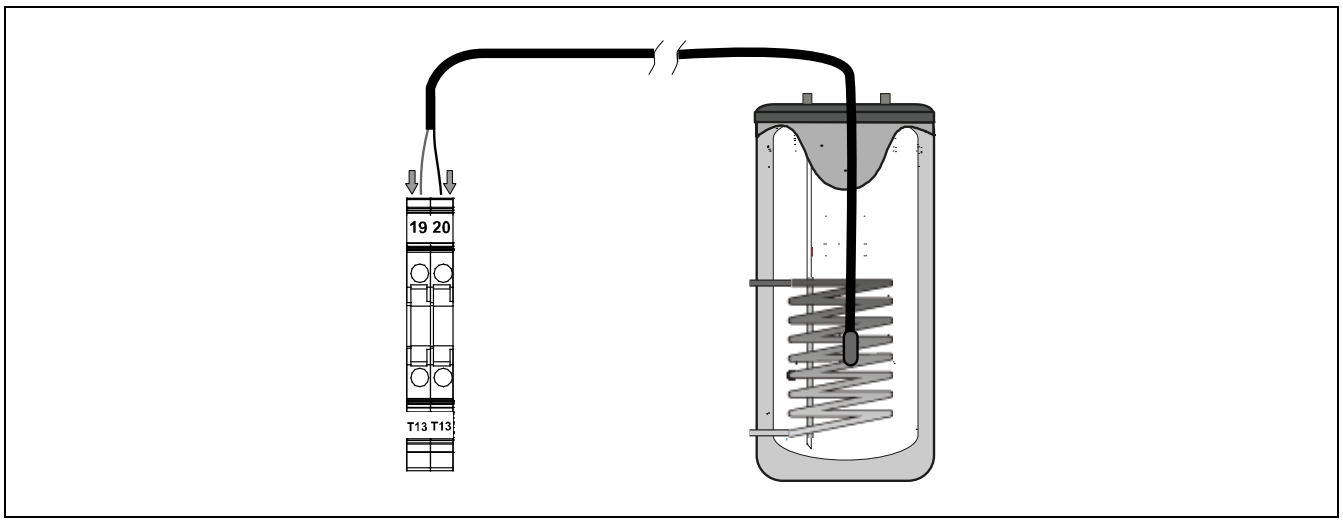

7.3.6 Connecting a DHW diverter valve (G1)

When installing an DHW tank in combination with the heat pump, a motorised 3-way diverter valve must be installed between the appliance and the installation. This valve enables the heat pump electronic control to divert the water to either the DHW tank (in DHW mode) or to the Heating/Air Conditioning circuit (in Heating or Cooling mode).

The valve is connected at electrical terminals **G1 (15), L(14)** and **N(6)** (Neutral) on the **X2** output terminal strip of **Easy Connect** module. The motorised diverter valve must be either a 2-wire valve (with return spring) or a 3-wire valve with phase return. The figures below show how the motorised valve is connected:

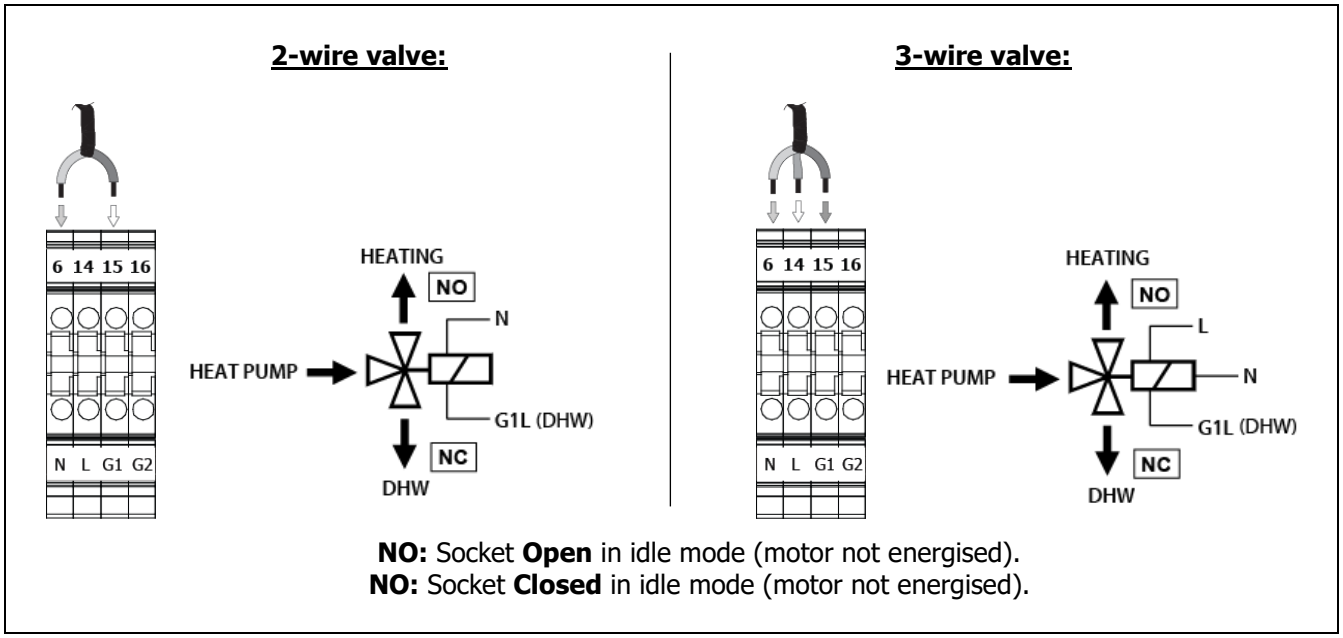

NO: Socket **Open** in idle mode (motor not energised).
NO: Socket **Closed** in idle mode (motor not energised).

IMPORTANT: Before carrying out any work on the heat pump electrical installation, ensure it is disconnected from the mains.

7.3.7 Connecting a Heating/Cooling diverter valve (G2)

If the water is to be diverted to different circuits according to whether the appliance is in Heating or Cooling mode (for radiator heating and fancoil cooling, for example), a motorised 3-way diverter valve must be installed between the appliance and the installation. This valve enables the heat pump electronic control to divert the water to either the heating circuit in Heating mode or the Air Conditioning circuit in Cooling mode.

The valve is connected at electrical terminals **G2 (16), L(14)** and **N(6)** (Neutral) on the **X2** output terminal strip of **Easy Connect** module. The motorised diverter valve must be either a 2-wire valve ,with return spring, or a 3-wire valve with phase return. The figures below show how the motorised valve is connected:

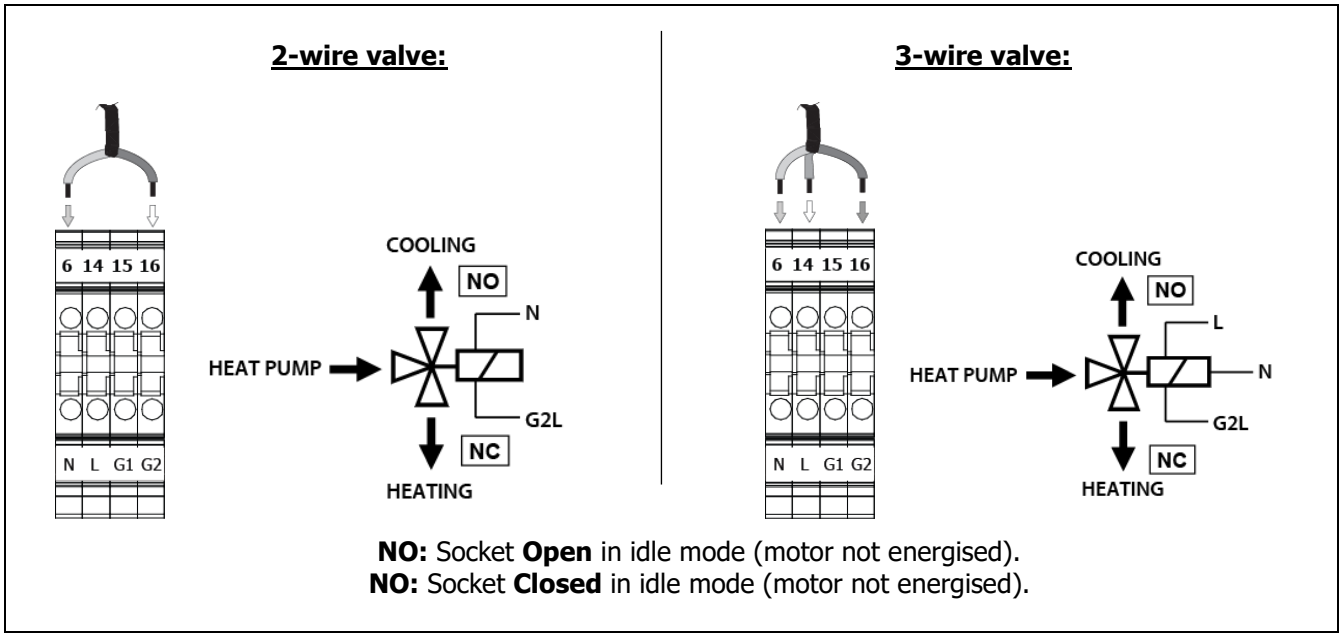

NO: Socket **Open** in idle mode (motor not energised).
NO: Socket **Closed** in idle mode (motor not energised).

IMPORTANT: Before carrying out any work on the heat pump electrical installation, ensure it is disconnected from the mains.

7.3.8 Connecting a room sensor or thermostat (Optional)

The electronic control unit of the **Easy Connect** indoor module can also be used to optimise home comfort by installing the room temperature sensor (see *"Operation with room sensor"*).

Terminals **T2 (11 - 12)** of the **X1** input terminal strip on the **Easy Connect** indoor module (see *"Connection Diagrams"*) are prepared for the connection of a device to measure the temperature inside the home, which can be used for remote control of the heating circuit. There are 2 types of devices that can be connected: a room sensor or room thermostat.

Properly choosing the location of these devices inside your home is vital to manage comfortable heating properly. They should be installed in an area that is usually occupied (living room, main bedroom or similar) and if possible not in areas with sources of heat or cold, such as the kitchen, bathrooms, cooled storage rooms, etc. Moreover, it should be installed at 1.5 meters above the floor and as far as possible from any source of heat or cold that might interfere with the thermostat, such as windows, fireplaces, heaters, radiators and so on.

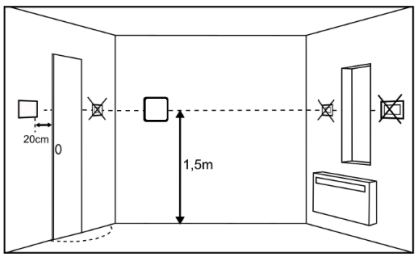

IMPORTANT: Whenever any work is done on the electrical installation, make sure it is disconnected from the main electrical supply network.

Room sensor

This option requires using the **AF sensor** supplied as an optional accessory by **DOMUSA TEKNIK**, from its range of air source accessories (in the **Dual Clima HT EC PRO+AF** models, the **AF sensor** is supplied as standard with the product). If the user does not wish to install cables, another alternative is to install a wireless room device, an **iC comfort** remote control or an **iC sensor** (see *"Installation with wireless devices Confort iC and/or Sonda iC"*).

The sensor measures the temperature inside the home, sends it to the **Easy Connect** indoor module and it is displayed on the control panel screen. The user can select the desired room temperature setpoint at any time (see *"Selecting temperatures"*) and can adjust the temperature according to a time schedule (see *"Time programming"*). The electronic control unit of the indoor module can adjust the operating conditions to achieve the desired degree of comfort and vary the heat pump temperature to optimise heating and cooling operation and efficiency.

Take the following steps to install a room sensor:

- Disconnect the indoor module from the mains power supply.
- Connect the room sensor to the **T2 (11 - 12)** terminals of the **X1** input terminal strip (see *"Electrical diagrams"*). The cable used to connect the room sensor should not be more than 50 meters long (cable section between 0.25 ÷ 1.25 mm^2).
- Connect the boiler to the mains power supply again.
- Set up the heat pump to operate with a "Room Sensor", by setting parameter **P150** to **4** in the "System parameters" (see "*Settings Menu*").
- The electronic control unit allows the user to change the setting measured by the room sensor in parameter **P146**. The first step is to wait for at least 10 minutes for the temperature setpoint to stabilise (without touching the room temperature sensor).

Room thermostat

A room thermostat connected to the indoor module will deactivate the demand for heating and/or cooling in Zone 1, depending on its settings. Moreover, if it can be programmed (programmable thermostat), the user can set the desired periods of operation.

- Take the following steps to install a room thermostat:
- Disconnect the indoor module from the mains power supply.
- Connect the room thermostat to the **T2 (11 - 12)** terminals of the **X1** input terminal strip (see *"Electrical diagrams"*).
- Connect the boiler to the mains power supply again.
- Set up the heat pump to operate with a "Room Thermostat", by setting parameter **P150** to **5** in the "System parameters" (see "*Settings Menu*").

7.3.9 Connecting an outdoor temperature sensor OTC (Optional)

The electronic control unit of the **Easy Connect** indoor module can be used to adapt home comfort to the outdoor weather conditions (see *"Outdoor temperature compensation function OTC"*).

For this option, it is advisable to install and use the **AF sensor** supplied as an optional accessory by **DOMUSA TEKNIK**. The sensor is connected to the **T4 (13 - 14)** terminals of the **X1** input terminal strip of the **Easy Connect** communications module. The cable used to connect the room sensor should not be more than 50 meters long (cable section between 0.25 ÷ 1.25 mm^2). If the user does not wish to install cables, another alternative is to install an **Sonda iC** wireless room device (see "Installation with wireless devices *Confort iC and/or Sonda iC*").

The **AF sensor** is designed to be installed outside the home and can be mounted on a wall. To ensure ideal temperature conditions, it is important to choose the right place to mount the sensor. It should be located on a wall facing north, protected from rain and humidity and, insofar as possible, not affected by direct sunlight or a source of heat or cold that might interfere with temperature measurement, such as exhaust grilles, smoke stacks, etc. It should also be easy to access to perform any maintenance it may require.

7.3.10 Connecting a buffer tank sensor (Optional)

When a buffer tank is installed in conjunction with the heat pump, a temperature sensor should be installed in the tank, through the immersion sleeve provided for that purpose. This sensor is used by the communications module electronic control unit to manage the temperature of the water in the buffer tank. It activates heating or cooling of the heat pump, depending on the selected mode and the temperature registered inside the tank.

The buffer tank temperature sensor is **not** supplied with the **Easy Connect** communications module, so it must be purchased from **DOMUSA TEKNIK**. The sensor is connected to the **T6 (15 - 16)** terminals of the **X1** input terminal strip of the **Easy Connect** communications module. The sensor is 5 meters long. If necessary, it can be extended to a maximum distance of 50 meters (section between 0.25 ÷ 1.25 mm^2).

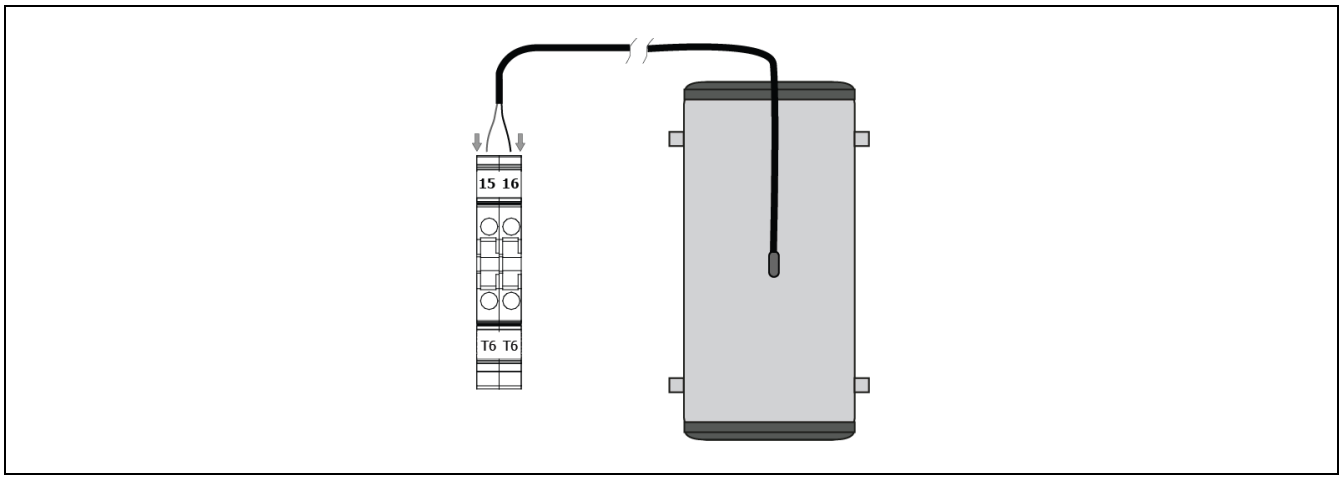

7.3.11 Connecting an installation pump C4 (Optional)

When a buffer tanks is installed in conjunction with the heat pump, users have the option of installing a circulation pump in the Heating/Cooling installation, downstream from the buffer tank. The electronic control unit of the communications module can use this pump to manage the water temperature in the installation by activating or deactivating the **C4** output, depending on the status of the room sensor or room thermostats connected to the indoor module and the operating mode selected at any given time.

The pump's electrical connections are made between terminals **C4 (12)** and **N (7)** (Neutral) of the indoor module's **X2** output terminal strip. Follow the instructions in the following figure carefully to ensure proper installation and electrical connection:

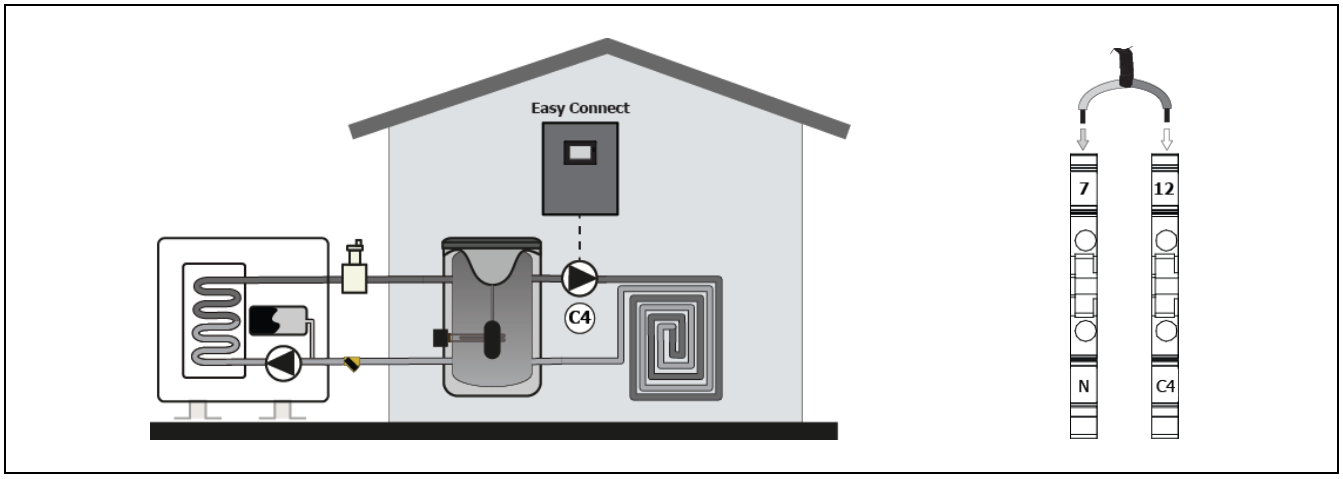

7.3.12 Connecting a zone installation pump Z1 and/or Z2 (Optional)

When a buffer tank is installed in conjunction with the heat pump, users have the option of installing circulation pumps to create up to 2 separate zones in the Heating/Cooling installation, downstream from the buffer tank. The electronic control unit of the communications module can use these pumps to manage the water temperature in each zone separately by activating or deactivating the **Z1** and/or **Z2** outputs, depending on the status of the **TA1** and/or **TA2** room thermostats connected to the indoor module and the operating mode selected at any given time.

The pump wiring must be connected to the **X2** outputs terminal strip of the indoor module; the pump in **Zone 1** between terminals **Z1 (29)** and **N (4)** (Neutral) and the pump in **Zone 2** between terminals **Z2 (30)** and **N (4)** (Neutral).

IMPORTANT: Before carrying out any work on the heat pump electrical installation, ensure it is disconnected from the mains.

7.3.13 Connecting a room thermostat TA1 and/or TA2 (Optional)

When a buffer tank is installed in conjunction with the heat pump and the user decides to install the **Z1** and/or **Z2** circulation pumps described in the section above, it will be necessary to install thermostats **TA1** and/or **TA2** inside the home; these will be required to manage separate operation of each heating/cooling zone, respectively.

The wiring of the thermostats must be connected to the **X2** outputs terminal strip of the indoor module at terminals **TA1 (25 - 26)** and the thermostat for **Zone 2** at terminals **TA2 (27 - 28)**. A voltage-free contact thermostat must be used. If the installation has been designed to operate in Heating and Cooling modes, 2-wire thermostats with operating mode selection should be used.

IMPORTANT: The thermostats must be configured to work in the same operating mode (Heating or Cooling) as the heat pump at all times.

IMPORTANT: Before carrying out any work on the heat pump electrical installation, ensure it is disconnected from the mains.

7.3.14 Connecting a backup energy source for DHW (E1)

A backup heating element for DHW (optional) can be connected to the **Easy Connect** module. The element must be connected to the socket provided for this purpose on the tank.

The element is connected between electrical terminals **E1 (24)** and **N (5)** (Neutral) on the **X2** terminal strip on the communication module.

IMPORTANT: The output relay E1 activating the element has a maximum consumption capacity of 1A, so to connect an element a relay must be run between the terminals of the terminal strip and the element.

DOMUSA TEKNIK offers the option of a kit consisting of an element with a relay included, specially designed for installation on the **DUAL CLIMA HT EC PRO** heat pump.

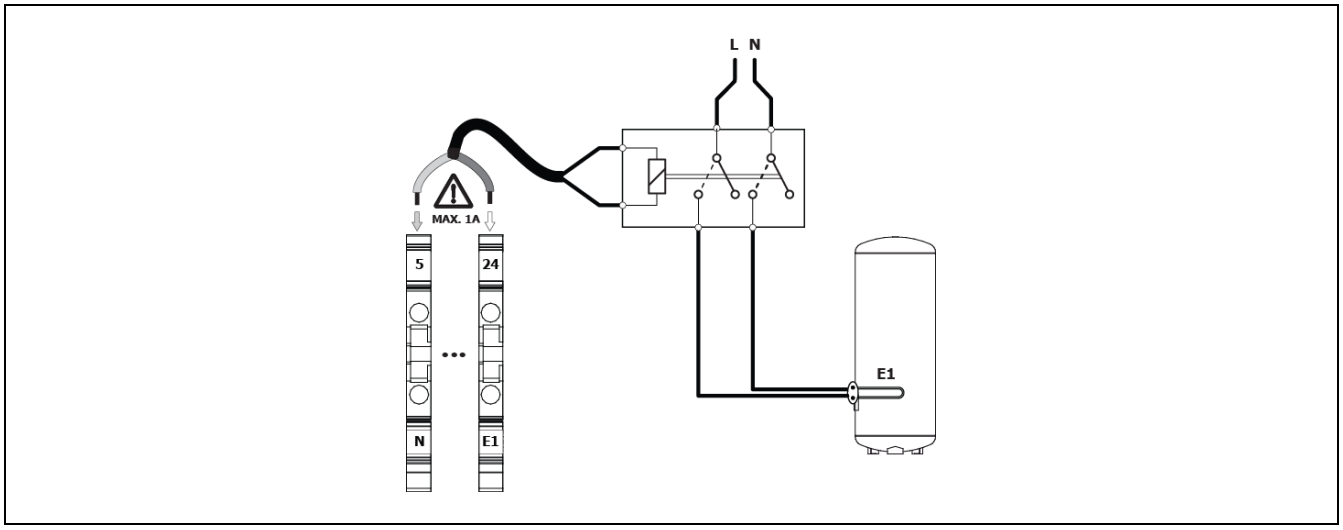

DOMUSA TEKNIK offers the option of a kit consisting of an element with a relay included, specially designed for installation on the **DUAL CLIMA HT EC PRO** heat pump.

IMPORTANT: Before carrying out any work on the heat pump electrical installation, ensure it is disconnected from the mains.

As an alternative to the heating element, a conventional energy source such as an oil-fired, gas-fired, electrical or biomass boiler can be connected to the **Easy Connect** module. The hot water tank must therefore be equipped with an auxiliary pipe and/or an intermediate heat exchange system allowing hydraulic connection of this backup energy source.

To make the electrical connection between the backup energy source and the **Easy Connect** module, use the same terminals as previously described, i.e. **E1 (24)** and **N (5)** (Neutral). Depending on the characteristics of the installation and the type of backup boiler, the electrical connection may be made in at least two different ways:

Voltage connection

This type of connection takes advantage of relay output **E1** to directly activate the energy source (switch on the boiler, activate a backup circulation pump, etc.). To make this connection, connect the communication module terminals **E1(24)** and **N (5)** to the power supply input of the boiler and/or backup installation components you wish to activate. Follow the diagram bellow to make a correct installation:

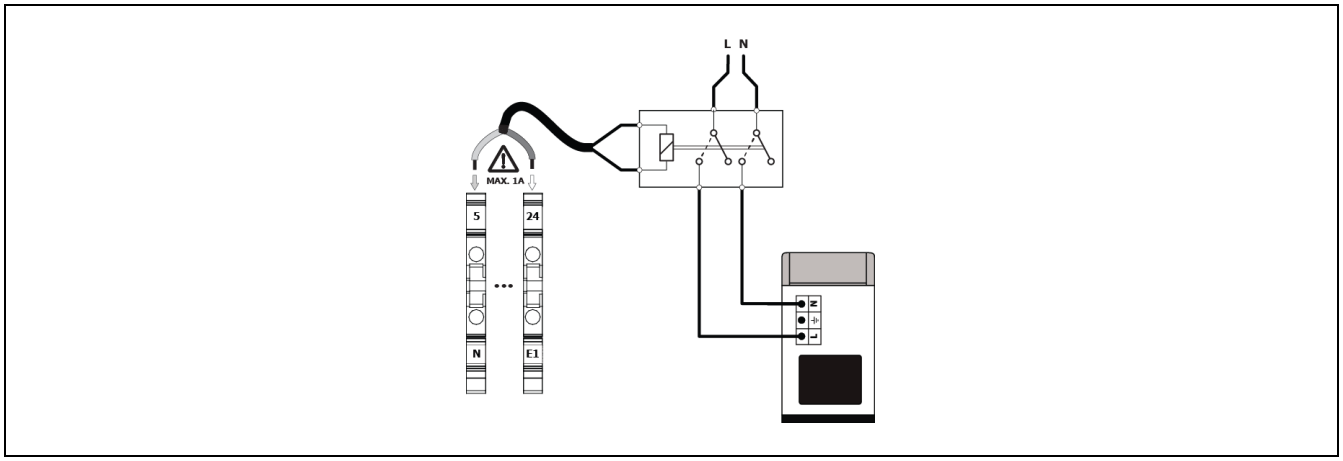

IMPORTANT: The output relay E1 has a maximum consumption capacity of 1A, so a relay must be inserted on connecting a boiler and/or backup installation components.

Voltage-free connection

If the control input for activating and deactivating the backup energy source is voltage-free (a room thermostat input or telephone relay input, for example), you must insulate the energised output of the **Easy Connect** module from the voltage-free input of the auxiliary energy source. To do this, run a relay between the module **E1** output and the control input. Follow the diagram bellow to make a correct installation:

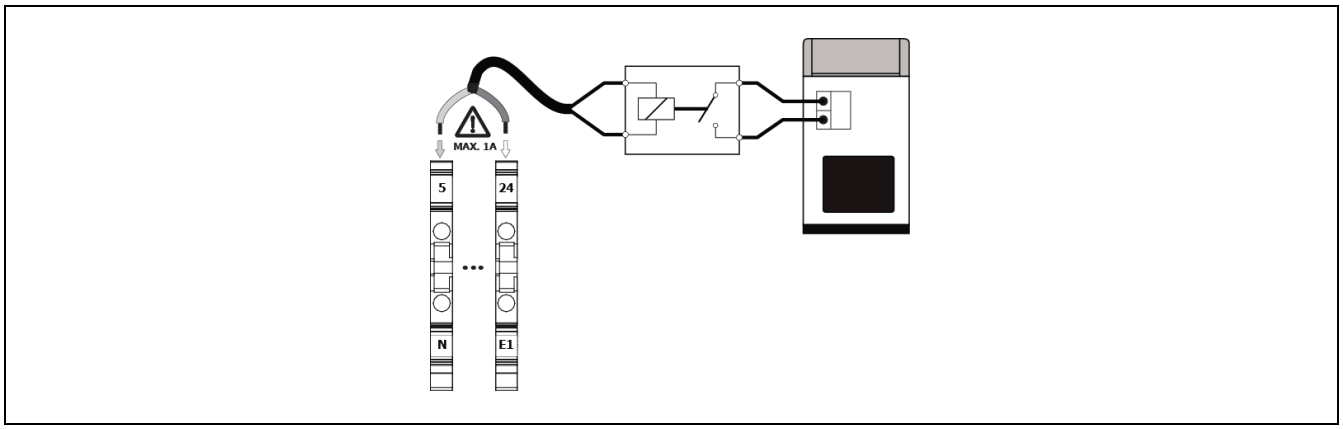

7.3.15 Connecting a backup energy source for Heating (E2)

A backup heating element (optional) for Heating can be connected to the **Easy Connect** module. The element must be connected to the socket provided for this purpose on the tank.

The element is connected between electrical terminals **E2 (23)** and **N (5)** (Neutral) on the output terminal strip **X2** on the communication module.

IMPORTANT: The output relay E2 activating the element has a maximum consumption capacity of 1A, so to connect an element a relay must be run between the terminals of the terminal strip and the element.

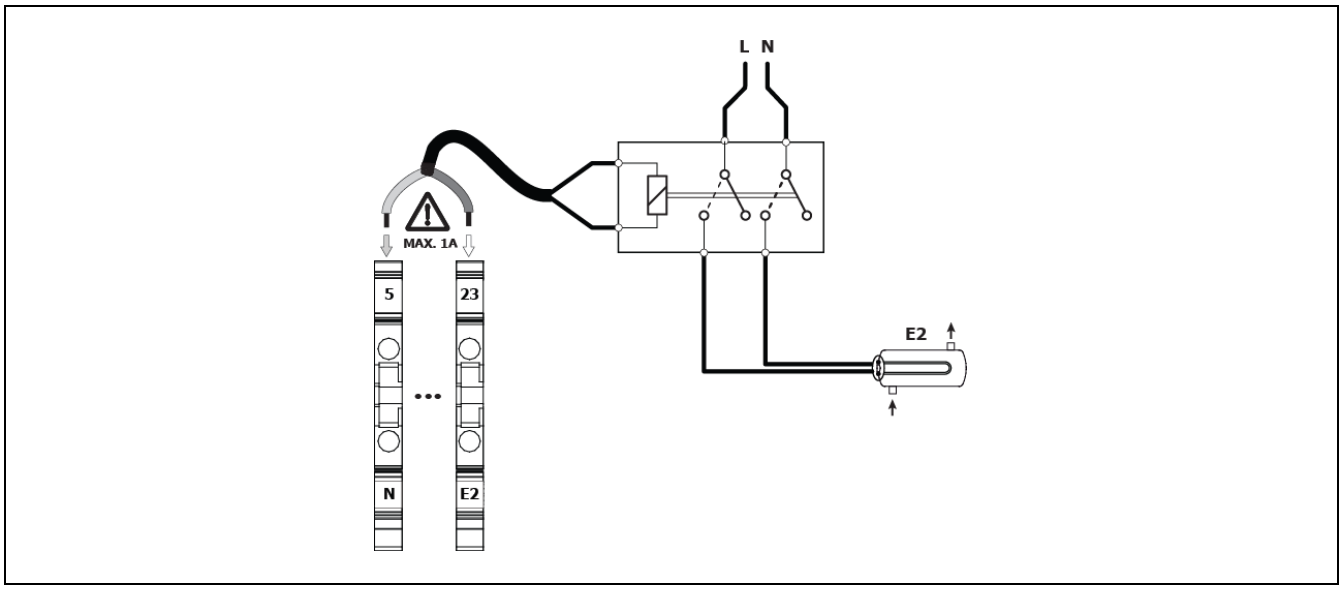

DOMUSA TEKNIK offers the option of a kit consisting of an element with a relay included, specially designed for installation on the **DUAL CLIMA HT EC PRO** heat pump.

IMPORTANT: Before carrying out any work on the heat pump electrical installation, ensure it is disconnected from the mains.

As an alternative to the heating element, a conventional energy source such as an oil-fired, gas-fired, electrical or biomass boiler can be connected to the **Easy Connect** module. In this case the heating installation must be equipped with an intermediate heat exchange system allowing hydraulic connection of this backup energy source, preferably separate from the heat pump water circuit.

To make the electrical connection between the backup energy source and the **Easy Connect** communication module, use the same terminals as previously described, i.e. **E2 (23)** and **N (5)** (Neutral). Depending on the characteristics of the installation and the type of backup boiler, the electrical connection may be made in at least two different ways:

Voltage connection

This type of connection takes advantage of relay output **E2** to directly activate the energy source (switch on the boiler, activate a backup circulation pump, etc.). To make this connection, connect the communication module terminals **E2 (23)** and **N (5)** to the power supply input of the boiler and/or backup installation components you wish to activate. Follow the diagram bellow to make a correct installation:

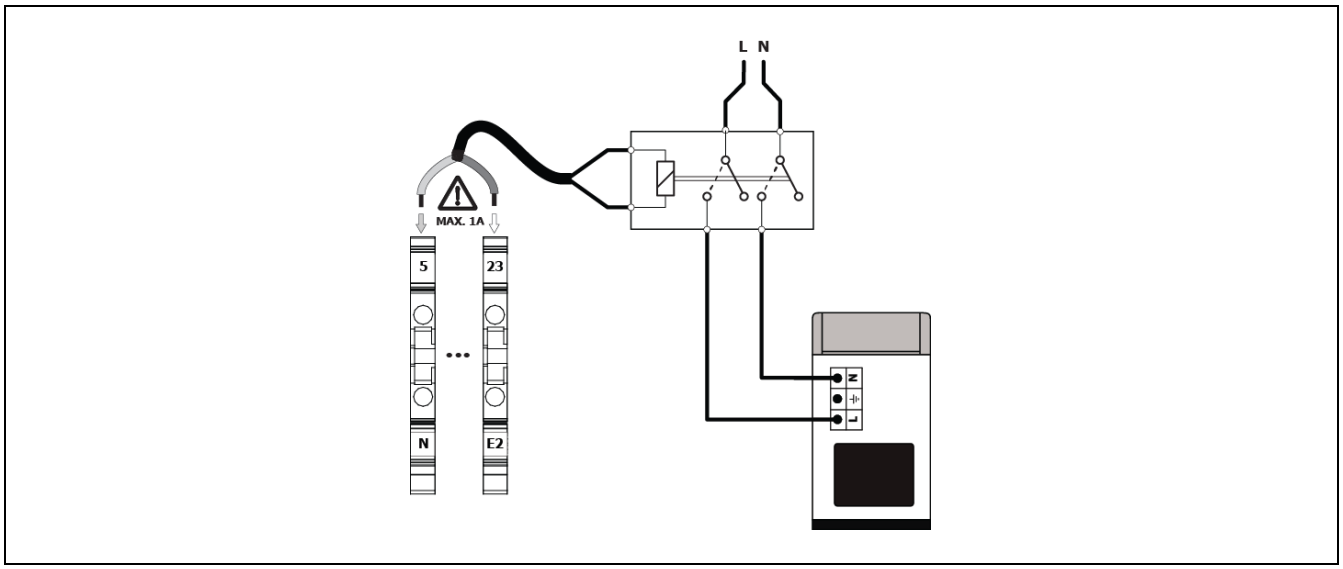

IMPORTANT: **The output relay E2 has a maximum consumption capacity of 1A, so a relay must be inserted on connecting a boiler and/or backup installation components.**

Voltage-free connection

If the control input for activating and deactivating the backup energy source is voltage-free (a room thermostat input or telephone relay input, for example), you must insulate the energised output of the **Easy Connect** module from the voltage-free input of the auxiliary energy source. To do this, run a relay between the module output **E2** and the boiler control input. Follow the diagram bellow to make a correct installation:

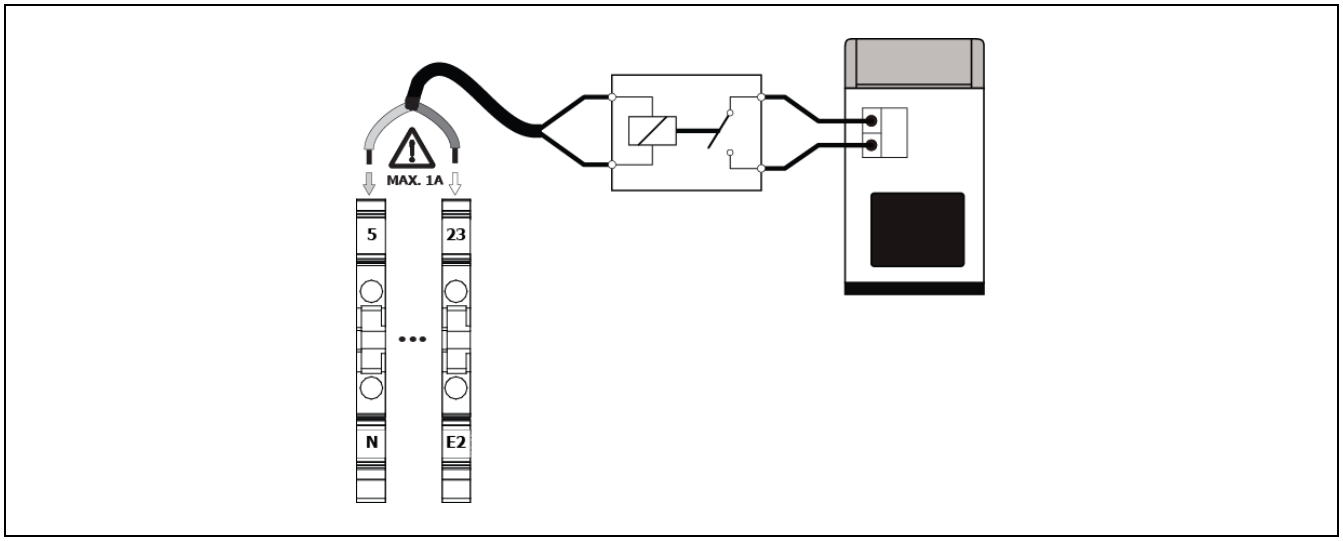

7.3.16 Connecting a backup pump (C1, C2 and C3)

Three circulation pumps **C1, C2 and C3** can be connected to the **Easy Connect** heat pump to increase the water flow in the appliance, if necessary, in addition to the flow obtained from its own internal pump.

IMPORTANT: Before carrying out any work on the heat pump electrical installation, ensure it is disconnected from the mains.

Main backup pump (C1)

This circulation pump **C1** will run synchronised with the internal pump of the heat pump. The pump must be installed between the heat pump and the installation in the house before any diverter valve or water storage tank (buffer or DHW tank).

The pump is connected between electrical terminals **C1 (1)** and **N (2)** (Neutral) on the **X2** output terminal strip on the communication module. Follow the diagram bellow to make a correct installation:

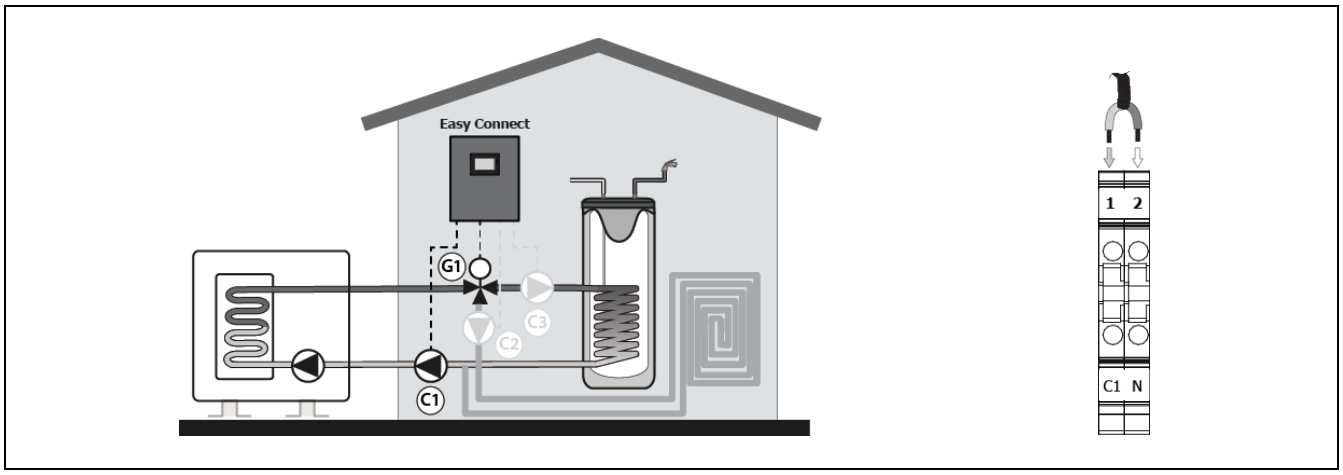

Backup pump for heating and/or cooling (C2)

This circulation pump **C2** will run only when the appliance is running in Heating or Cooling mode, to increase the water flow only in the Heating Cooling installation. This element must be installed in the hydraulic circuit of Heatin/Cooling between the DHW diverter valve **G1** (Heating/DHW) and the water storage element if there is any (buffer,…).

The element is connected between electrical terminals **C2 (10)** and **N (9)** (Neutral) on the **X2** terminal strip of the communication module. Follow the diagram bellow to make a correct installation:

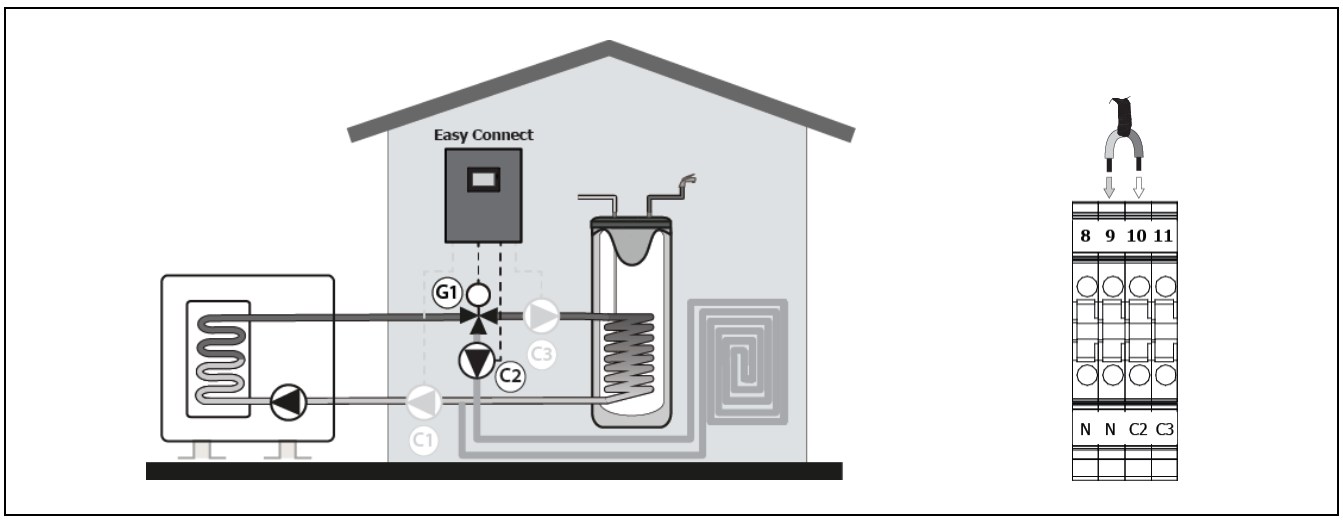

Backup pump for DHW production mode (C3)

This circulation pump **C3** will run only when the appliance is running in DHW mode, to increase the water flow only in the DHW installation. This element must be installed in the hydraulic circuit of DHW between the DHW diverter valve **G1** (Heating/DHW) and the DHW tank.

The element is connected between electrical terminals **C3 (11)** and **N (8)** (Neutral) on the **X2** terminal strip of the communication module. Follow the diagram bellow to make a correct installation:

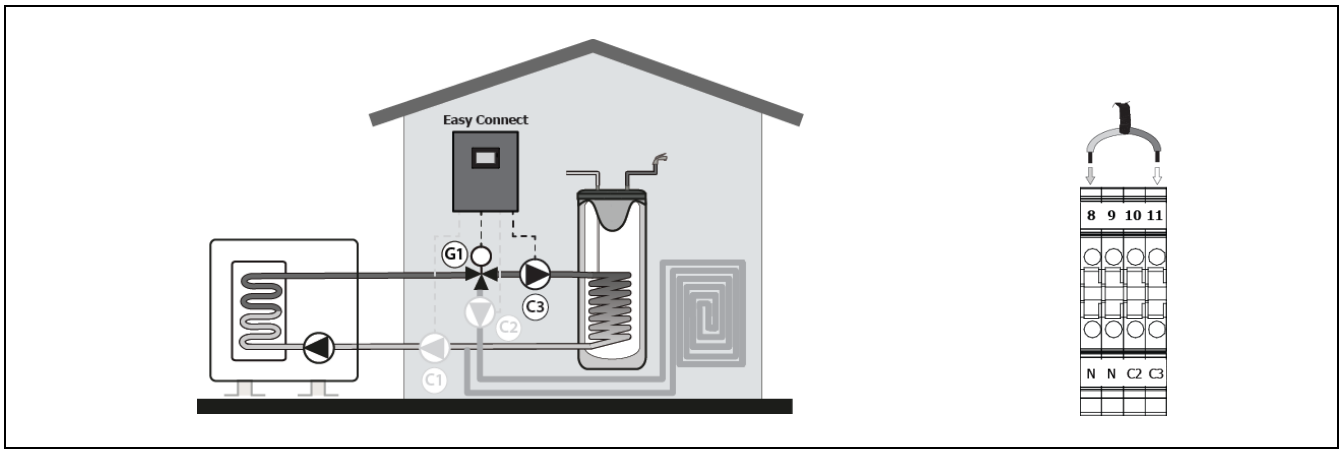

7.3.17 Connecting room thermostats for "AUTO" mode

The **Easy Connect** module has two connections on the component terminal strip **X1** for connecting up to 2 room chronothermostats or room thermostats (see *"Connection Diagram"*), , which allows automatic and remote selection of the heating or cooling mode in the heating/cooling installation, switching off the heat pump when the desired room temperature is reached and switching it on when the temperature in the home falls below this value. The input **C-COM (2-3)** activates and deactivates Cooling mode and the input **H-COM (1-4)** activates and deactivates Heating mode, and the operating modes of the heating/air conditioning installation are therefore managed automatically and remotely (**"AUTO"** mode) from the location of the room thermostat(s) installed.

Terminals **H-COM** and **C-COM** are supplied by default with a bridge connected to each one, so **both** bridges will have to be removed before connecting the room thermostat(s), regardless of the configuration of the thermostats to be installed.

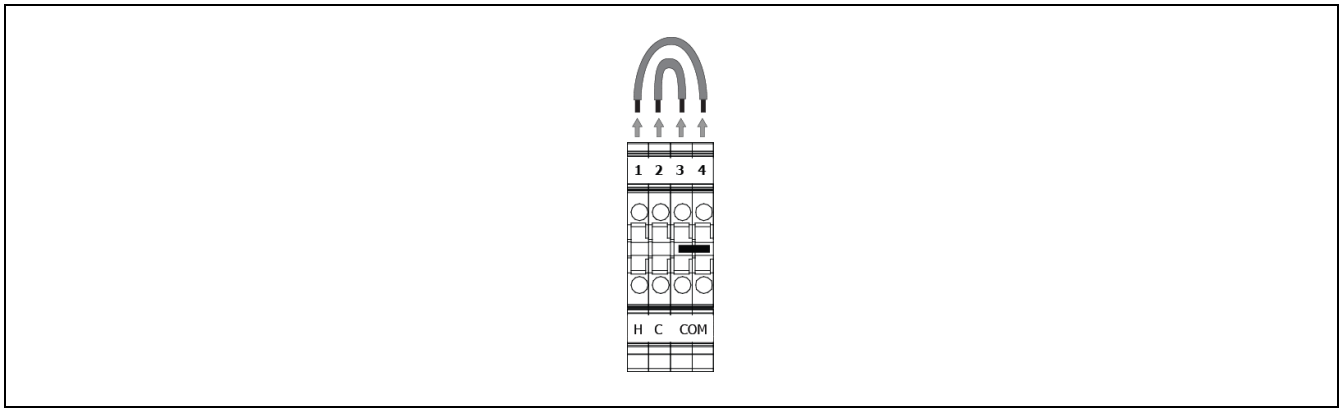

Up to 4 different room thermostat configurations may be installed, depending on the type of thermostat or combination of thermostats used. The following sections provide a detailed description of the functioning and installation of each of these configurations.

IMPORTANT: Before carrying out any work on the heat pump electrical installation, ensure it is disconnected from the mains.

Connecting a switched 3-wire Hot/Cold thermostat ("AUTO" mode)

As well as selecting the desired temperature and operating times, if the type of thermostat used is a chronothermostat the user can select the operating mode (Heating ☀/Cooling ❄) on the thermostat itself.

This type of thermostat uses 3 communication wires to function: one for the Heating mode activation signal, one for the Cooling mode activation signal and the other for the common signal. According to the status of each signal, the **Easy Connect** module manages the Heating/Cooling operating modes as follows:

Heating mode	Cooling mode	OFF (standby) (temp. reached)
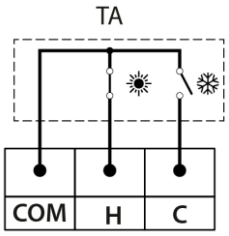	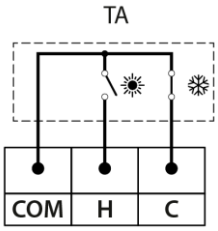	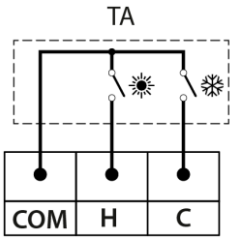

Terminals **H (1)**, **C (2)** and **COM (3-4)** are supplied by default with a bridge connected to each one, so on installing this type of thermostat **both** bridges will have to be removed and the thermostat connected as shown in the figure below:

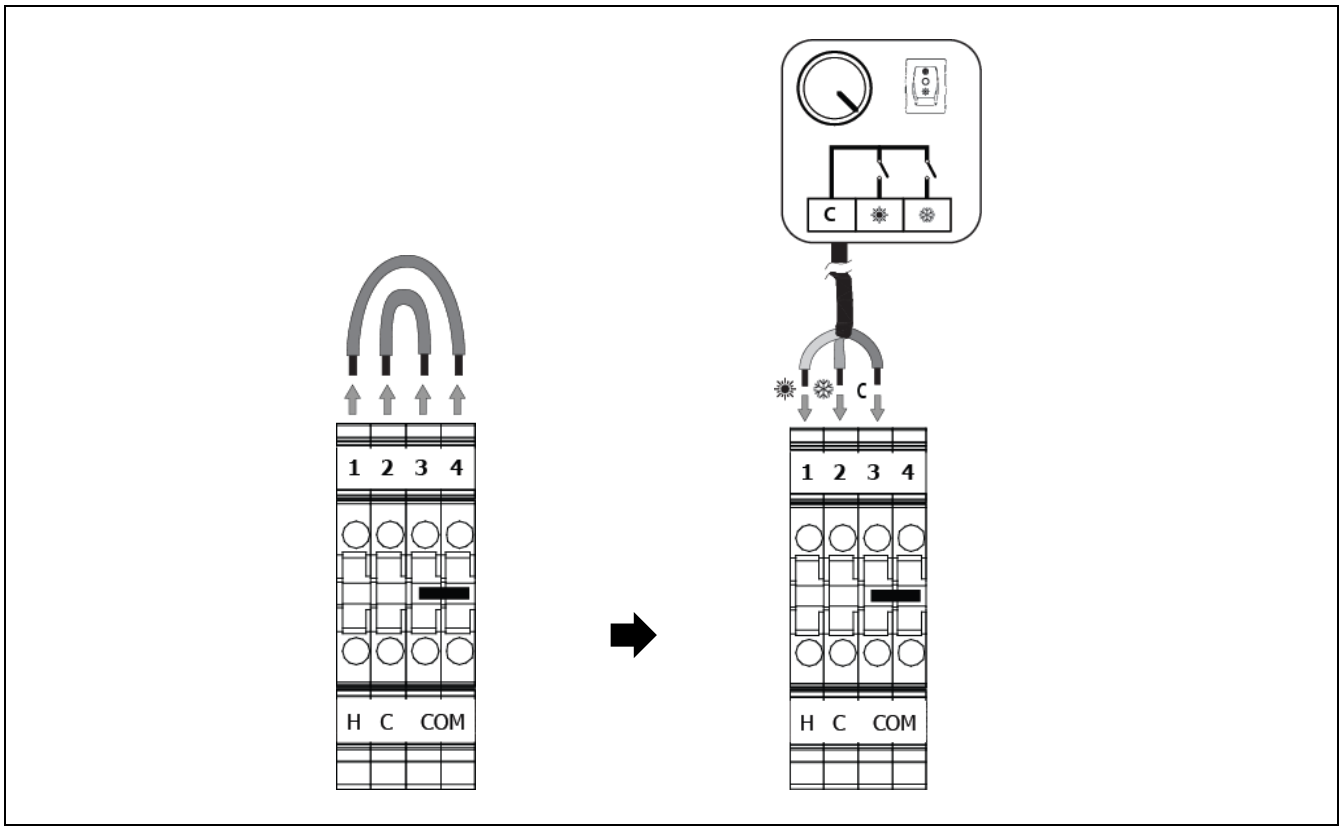

Connecting a 2-wire Hot/Cold switching thermostat

With this type of thermostat, the desired temperature and the operating times can be selected, if it is a chronothermostat. Unlike a 3-wire hot/cold switching thermostat, a 2-wire thermostat does now allow operating mode selection (Heating☀/Cooling❄) on the thermostat alone: the operating mode has to be selected on both the thermostat and the heat pump. For this room thermostat selection process to function correctly, the heat pump and the thermostat must both be configured **for the same single operating mode**, either Heating or Cooling.

As indicated in the figure, the heat pump electronic control will begin to work in "Manual" mode if this is required by the thermostat, i.e. the Heating/Cooling operating modes must be selected manually on the heat pump control panel.

OFF (standby) (temp. reached)	**Manual mode**
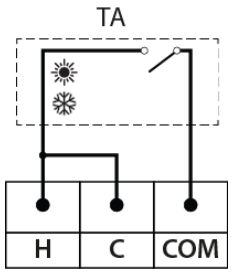	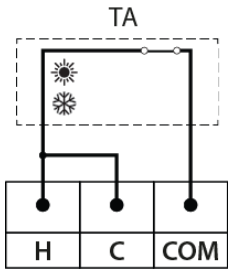

Terminals **H (1)**, **C (2)** and **COM (3-4)** are supplied by default with a bridge connected to each one, so on installing this type of thermostat **both** bridges will have to be removed and the thermostat connected as shown in the figure below, and a bridge between inputs **H (1)** and **C (2)** will be required:

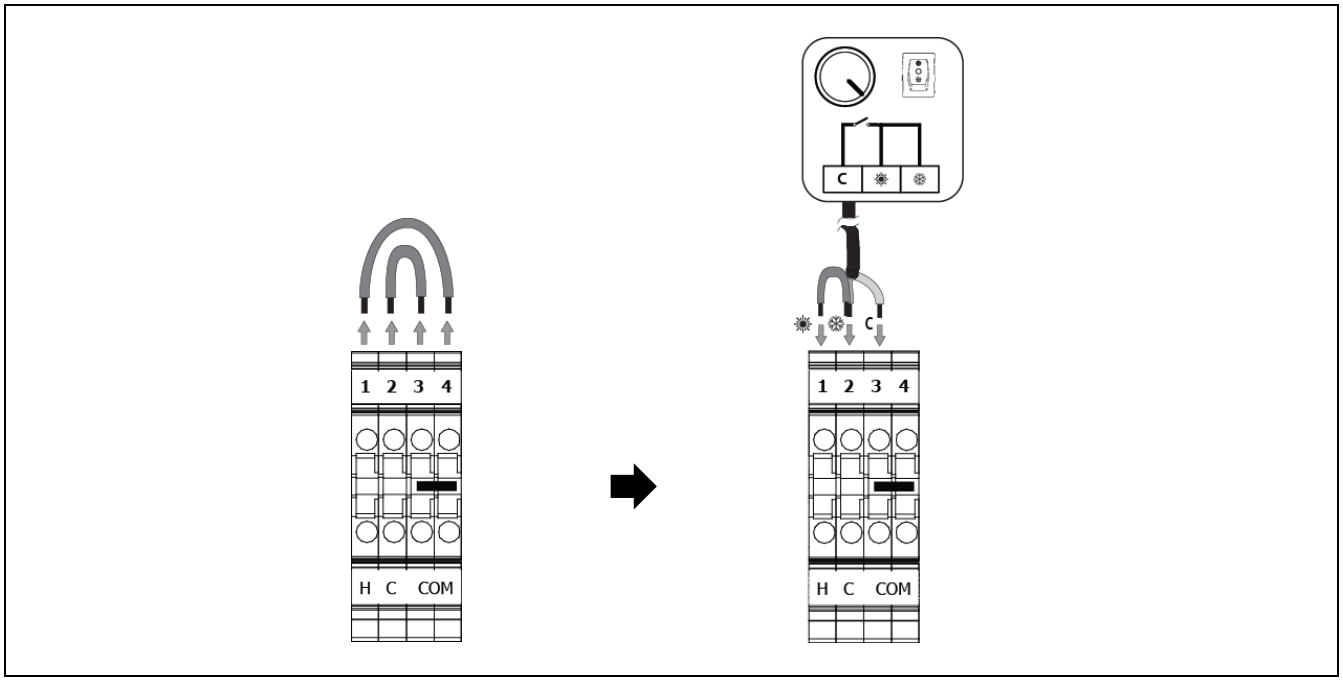

Connecting two room thermostats

In this type of configuration 2 single room thermostats are connected, one to terminals **C (2)** and **COM (3)** (thermostat for Cold, **TAF**) and the other to terminals **H (1)** and **COM (4)** (thermostat for Heat, **TAC**). Each one will manage a different operating mode, and each thermostat must therefore be of a type compatible with the operating for which it has been installed. The thermostat connected to the cold input (**TAF**) must send a request (closed circuit signal) when the room temperature is higher than the desired temperature (setpoint temperature), and the thermostat connected to the heat input (**TAC**) must send a request (closed circuit signal) when the room temperature is lower than the desired temperature (setpoint temperature).

The **Easy Connect** module will activate the Heating/Cooling operating modes according to the status of the signal received from each thermostat, as follows:

Heating mode	Cooling mode	OFF (standby) (temp. reached)	Manual mode
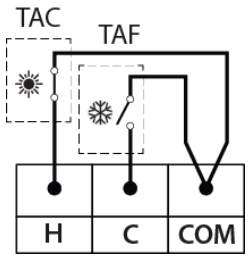	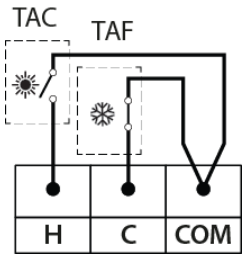	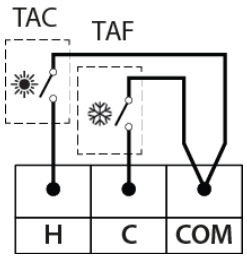	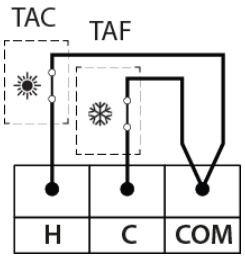

As indicated in the figure, the heat pump electronic control will begin to work in "Manual" mode if the room thermostat setpoint temperatures are selected so that both of them send an operating request at the same time, i.e. the Heating/Cooling operating modes must be selected manually on the heat pump control panel. To avoid this situation, it is essential to **ensure that the correct temperatures are selected on each one, in order to prevent crossover, with both thermostats being activated at the same time.**

Terminals **H (1)**, **C (2)** and **COM (3-4)** are supplied by default with a bridge connected to each one, so to install the thermostats **both** bridges will have to be removed and the thermostats connected as shown in the figure below:

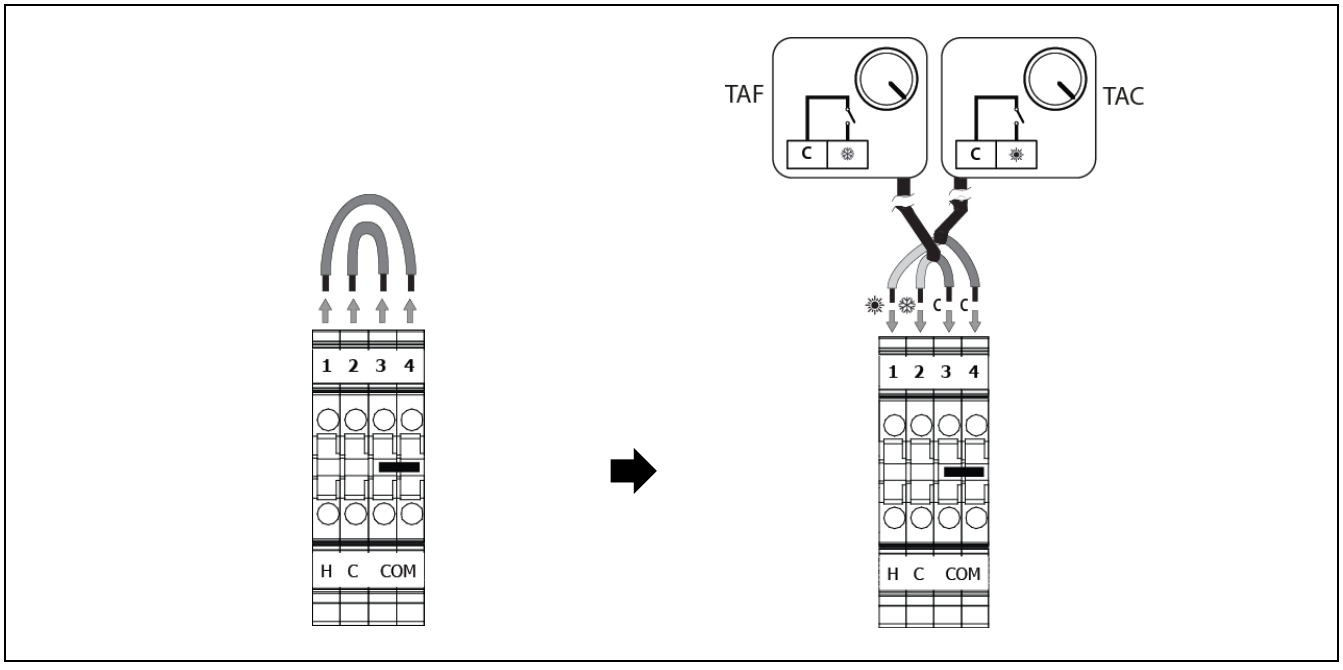

Connecting one room thermostat

In this type of configuration one single thermostat is connected, either to the input **C (2)** and **COM (3)** (thermostat for Cold, **TAF**), or to the input **H (1)** and **COM (4)** (thermostat for Heat, **TAC**). For this room thermostat management setting to function correctly, the heat pump must be configured for **one single** operating mode, either Heating or Cooling (see *"Heat pump configuration"*). Depending on which input the thermostat is connected to, it will manage the corresponding operating mode and the type of room thermostat must be able to do this. The thermostat connected to the cold input (**TAF**) must send a request (closed circuit signal) when the room temperature is higher than the desired temperature (setpoint temperature), and the thermostat connected to the heat input (**TAC**) must send a request (closed circuit signal) when the room temperature is lower than the desired temperature (setpoint temperature).

Terminals **H (1)**, **C (2)** y **COM (3-4)** are supplied by default with a bridge connected to each one, so on installing the thermostat **both** bridges will have to be removed and the thermostat connected as shown in the figure below, according to the mode to be managed:

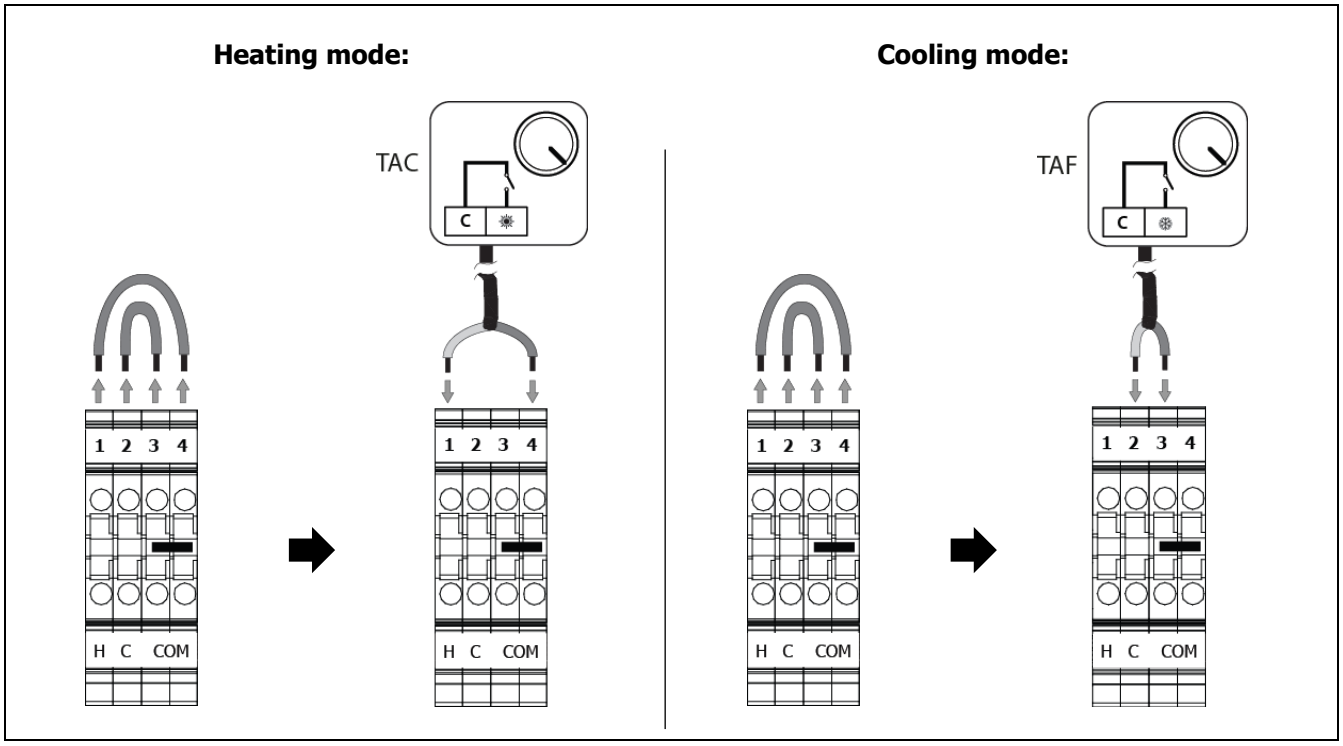

7.3.18 Connecting an AIR Hydraulic Kit

The **Dual Clima HT EC PRO** heat pump can be installed along with an **AIR Hydraulic Kit** from the wide range of products offered by **DOMUSA TEKNIK**, thereby increasing the performance features of the heat pump to provide heating and cooling service.

Communication between the **AIR Hydraulic Kit** and the **Dual Clima HT EC PRO** heat pump is performed by the **iConnect** communications module; therefore, before connecting the AIR Hydraulic Kit, the **iConnect** module must be connected to the **Easy Connect** indoor module (see *"Connecting the iConnect module"*). Read the installation instructions manual supplied with the Kit carefully for correct installation of the AIR Hydraulic Kit.

7.3.19 Connecting SG Ready

The **Easy Connect** module has two connections on the **X1** component terminal strip for connecting 2 inputs for the SG Ready function (see "*Connection Diagram*"), enabling management of the SG function. The input **SG1 (7-8)** activates and deactivates the SG1 connection and the input **SG2 (9-10)** activates and deactivates the SG2 connection, for remote automatic management of the operating modes of the SG Ready function. (see "*SG Ready function*").

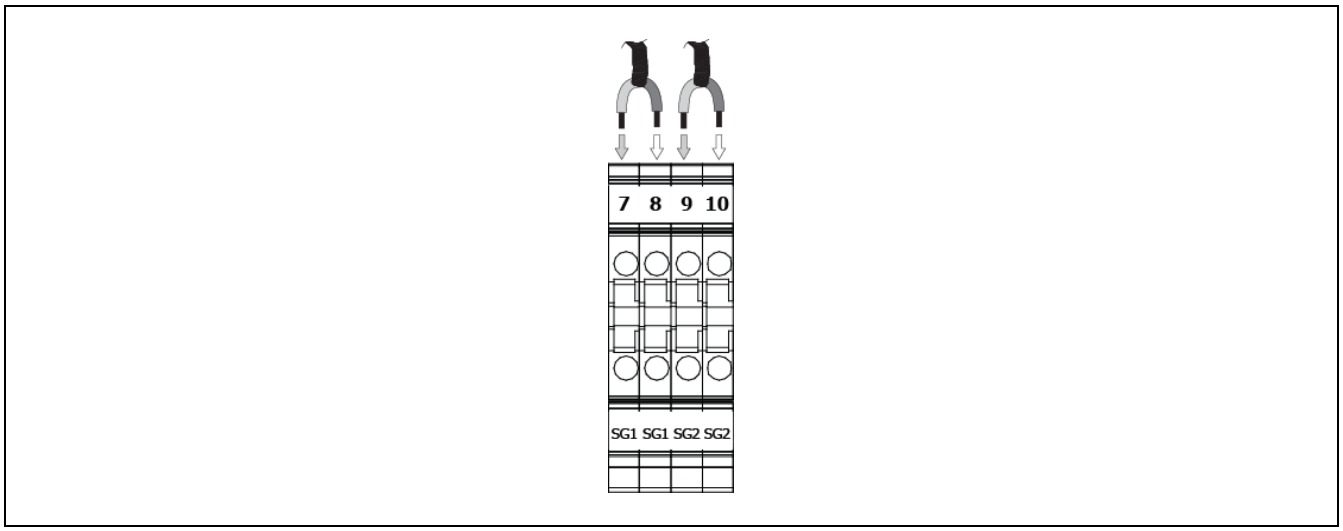

IMPORTANT: Before carrying out any work on the heat pump electrical installation, ensure it is disconnected from the mains.

7.3.20 Connecting a humidity switch sensor (Optional)

Another option is to connect a humidity sensor to the **Easy Connect** indoor module to protect the installation from condensation (see *"Additional functions"*).

The humidity sensor must have an output for a voltage-free relay; thus, the contact will stay open unless a hazardous degree of humidity is detected, in which case the contact will close. The humidity sensor will be connected to the **Hu (5 - 6)** terminals of the **X1** input terminal strip of the indoor module. When the electronic control unit detects a closed circuit signal in the **Hu** input, it will activate the anti-humidity protection and when it detects an open circuit signal, it will restore normal heat pump operation.

Regardless of the type of humidity sensor chosen by the user, it should be placed where condensation is most likely to appear first. The sensor should not be located near sources of heat or cold that can cause incorrect readings. An incorrect reading of the humidity sensor can interfere with the activation of the anti-humidity function and result in hazardous situations for people (e.g., slips due to wet floors) and damage caused by humidity.

IMPORTANT: Before carrying out any work on the heat pump electrical installation, ensure it is disconnected from the mains.

7.3.21 Connecting an energy meter (Optional)

There is also the option of connecting an energy meter to the **Easy Connect** indoor module to enable the use of solar power (see *"Additional functions"*).

The energy meter model offered by **DOMUSA TEKNIK** is **SDM230**, although various market models can be selected using parameter **P131** of the "System parameters" menu (see *"Settings Menu"*). The meter will communicate with the indoor module using the **RS485 Modbus** communication protocol to send the surplus energy information generated by the home's photovoltaic installation. Therefore, **the meter will have to be installed between the home's main power supply and the consumption points covered by the solar installation**.

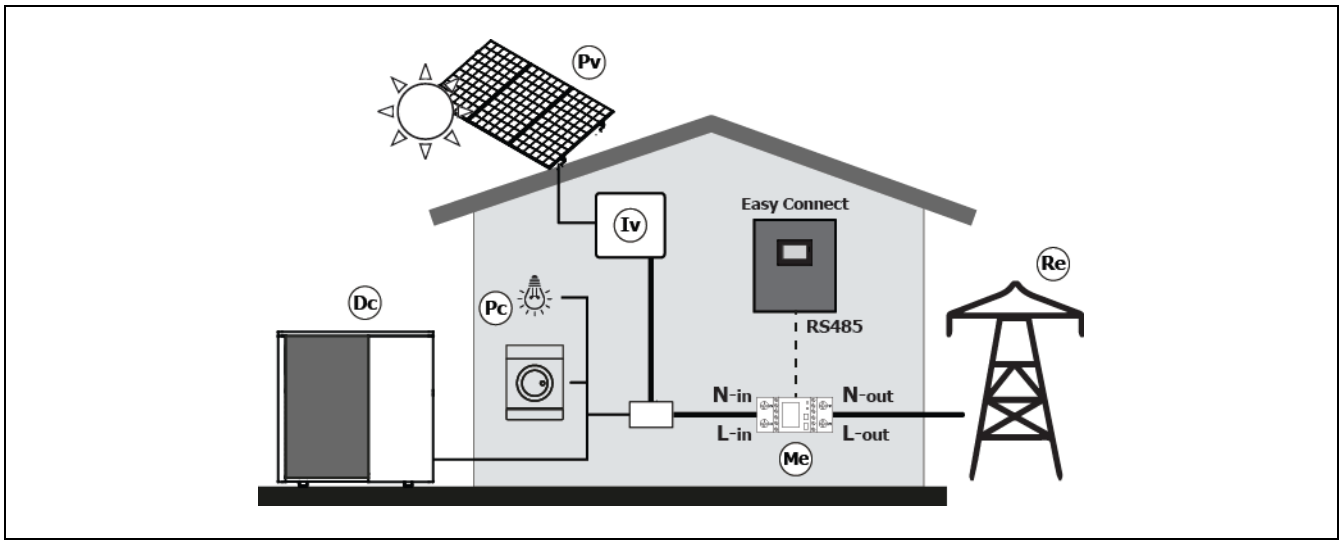

Dc: Outdoor unit **Dual Clima HT EC PRO**.

Pv: Photovoltaic panels.

Iv: Solar inverter.

Pc: Consumption points.

Me: Energy counter **SDM230**.

Re: Main electrical power supply.

The energy meter is **bidirectional,** so it is essential to connect it to the home electrical supply according to the correct sequence and poles. Otherwise, the information sent to the electronic control unit of the indoor module will not be correct and the energy from the main power supply will be consumed instead of the energy produced by the solar installation. The **SDM230** energy meter must be connected to the main power supply between terminals $\mathbf{L_{in}}$-$\mathbf{N_{in}}$ (**1** - **2**) and $\mathbf{L_{out}}$-$\mathbf{N_{out}}$ (**3** - **4**) provided in the metering device. The voltage line from inside the home to the main power supply must be connected to terminals **1 - 2** and the line entering the home from the main power supply must be connected to terminals **3 - 4**, as shown in the following figure:

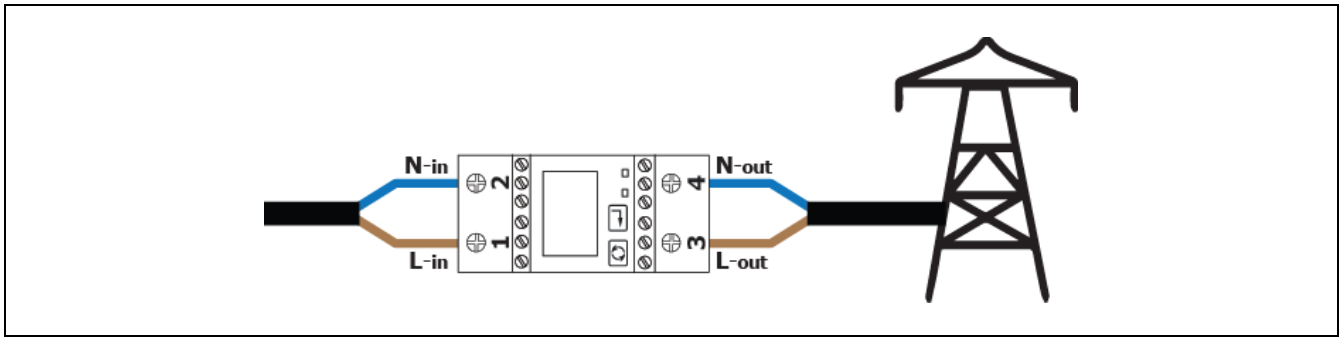

IMPORTANT: Before carrying out any work on the heat pump electrical installation, ensure it is disconnected from the mains.

The connection between the energy meter and the indoor module is made between the **RS485 A(1)** and **B(2)** yellow terminals of the **X1** inputs strip of the **Easy Connect** module and the **A(5)** and **B(6)** terminals of the energy meter communication terminals strip. The communications cable between the meter and the indoor module should not be more than 100 meters long (cable section between 0.25 ÷ 1.25 mm^2). The cable should be connected according to the poles shown on the terminals, i.e., terminal **A** of the module to terminal **A** of the meter and the same for the **B** terminals, as shown in the following figure:

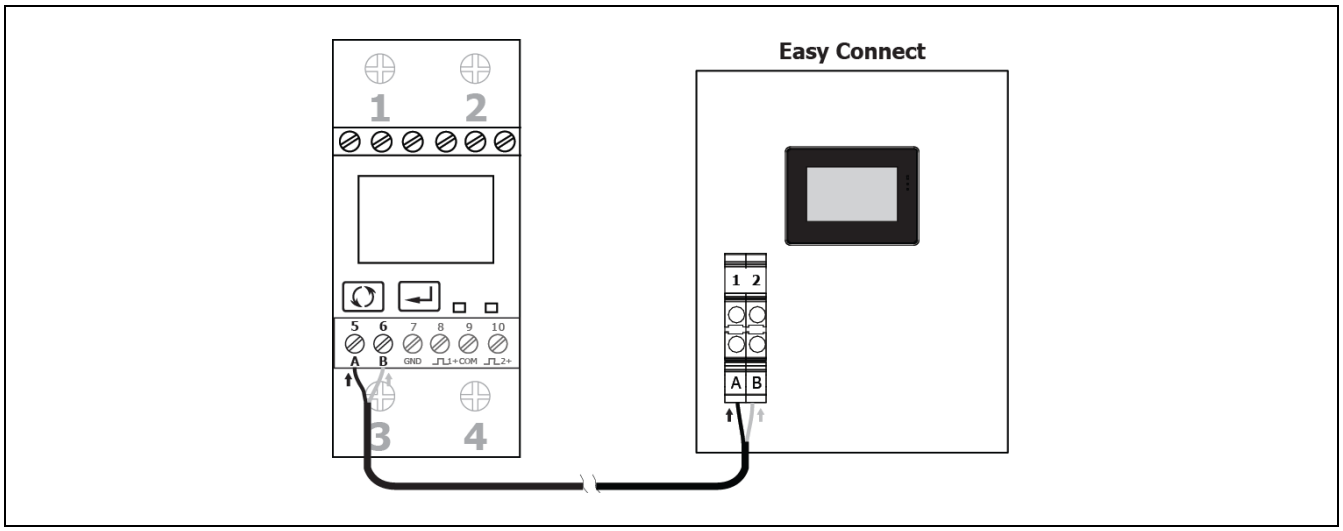

IMPORTANT: **It is essential to connect the cables to the same terminal poles between the Easy Connect indoor module and the two-way energy meter.**

For the energy meter to work properly, the communication address of the device must be set to **2** (Device ID = 02) and communication speed to **9600** bps (Baud rate = 9600).

In the **SDM230** energy meter, these parameters are set on the screen of the device's front panel. To do this, use the 2 buttons at the bottom of the screen; use the (Scroll) button to navigate through the various screen options and adjust the settings of a parameter and use the (Enter) button to save the new setting after adjusting it. The (Enter) button must remain pressed for **3 seconds** to access a parameter and then to save it. Follow the instructions below carefully to set up the **SDM230** energy meter:

- To set the communication address, use the button to navigate until the "**Add 001**" screen appears and then change the setting to "**Add 002**"; follow the instructions in the figure below to change the setting:

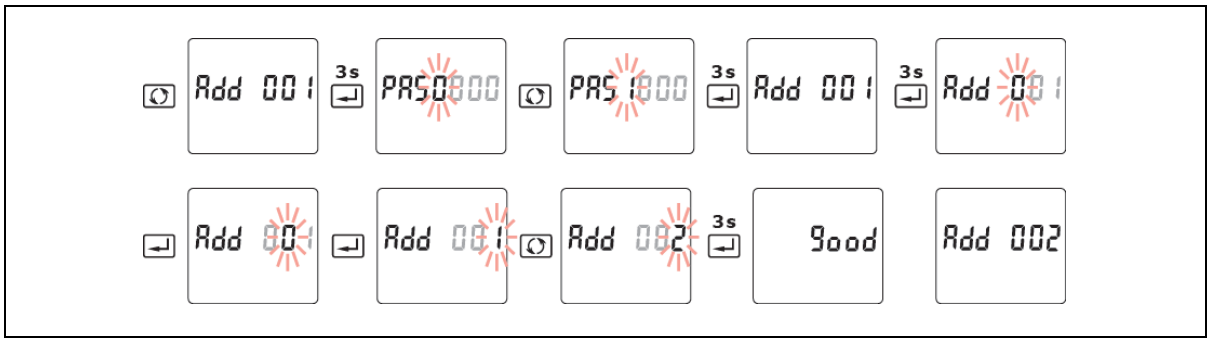

- To set the communication speed, use the button to navigate until the "**bd 19200**" screen appears and then change the setting to "**bd 9600**"; follow the instructions in the figure below to change the setting:

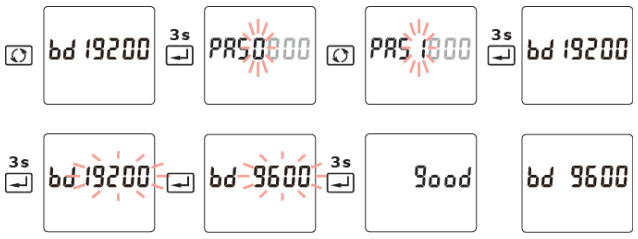

NOTE: If the user has any questions or is unable to set up the meter correctly, please read the installation instructions supplied with the meter.

After setting the internal parameters of the energy meter, the user will have to select the meter model that is being used in the **Easy Connect** indoor module. This is done by setting the value of parameter **P131** in the "System parameters" menu (see *"Settings Menu"*) with the following model codes:

- Single-phase energy meter Eastron **SDM230**: **P131** = **12**.
- Three-phase energy meter Eastron **SDM630**: **P131** = **52**.

After installing and setting up the energy meter, use parameter **C69** of the "Status Parameters" menu (see *"Settings Menu"*) to verify the energy sent by the meter. Make sure that this amount matches the amount displayed on the panel of the **SDM230** device. A positive amount indicates a surplus of electrical power produced by the photovoltaic solar installation, whereas a negative value indicates that energy is being consumed from the electrical power supply.

7.3.22 Cascade installation (Optional)

The electronic control unit of the indoor module can manage cascade operation, in both Heating and Cooling modes, of up to 4 **DUAL CLIMA HT EC PRO** outdoor units (see *"Additional functions"*).

However, this will require each outdoor unit to operate in conjunction with an **Easy Connect** indoor module (see *"Connection to the outdoor unit"*). Also, as a minimum, the installation must have a buffer tank for the outdoor units connected in cascade to work with, in addition to a buffer tank temperature sensor for each one (see *"Connecting a buffer tank sensor"*). The DIP-Switch **SW3-1** must be set to **ON** in each **Easy Connect** indoor module to enable cascade operation. This is done by disconnecting the power to the **Easy Connect** indoor module switching the **SW3-1** switch to **ON** and connecting the power again to the indoor module.

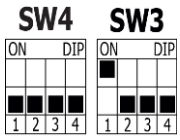

The outdoor units must be numbered **1** to **4**, (see *"Additional functions"*), where the **Dc1** heat pump is the main unit and the rest are secondary units that will start up one after another if the main unit cannot achieve the cooling or heating temperature setpoint. The **E3** (Heating) and **E4** (Cooling) outputs of the main **Easy Connect** indoor module (**Dc1**) must be connected to the **TAC** (Heating) and **TAF** (Cooling) inputs of the rest of the cascade system indoor modules, as shown in the figure. To manage cascade operation in **Heating mode**, this connection must be made between terminals **E3 (21 - 22)** of the **X2** outputs strip of the main module (**Dc1**) and terminals **TAC (1 - 4)** of the **X1** inputs strip of the rest of the indoor modules installed in cascade. To manage cascade operation in **Cooling mode**, the connection must be made between terminals **E4 (19 - 20)** of the **X2** outputs strip of the main module (**Dc1**) and terminals **TAF (2 - 3)** of the **X1** inputs strip of the rest of the indoor modules installed in cascade.

Apart from providing power to the cascade system, the main unit (**Dc1**) can also manage several other options: the production of DHW by a DHW storage tank connected to it, operation of backup power supplies **E1** and **E2**, operation of installation pump **C4** or zone pumps **Z1** and/or **Z2**, operation with the room sensor, the SG Ready function or the solar energy function (see *"Additional functions"*), if they are available. For proper installation and configuration of these functions in the main unit (**Dc1**), follow the installation and operation instructions for each function explained in this manual.

The following figure shows a schematic of the hydraulic circuit and an electrical connections diagram of four **DUAL CLIMA HT EC PRO** heat pumps installed in cascade:

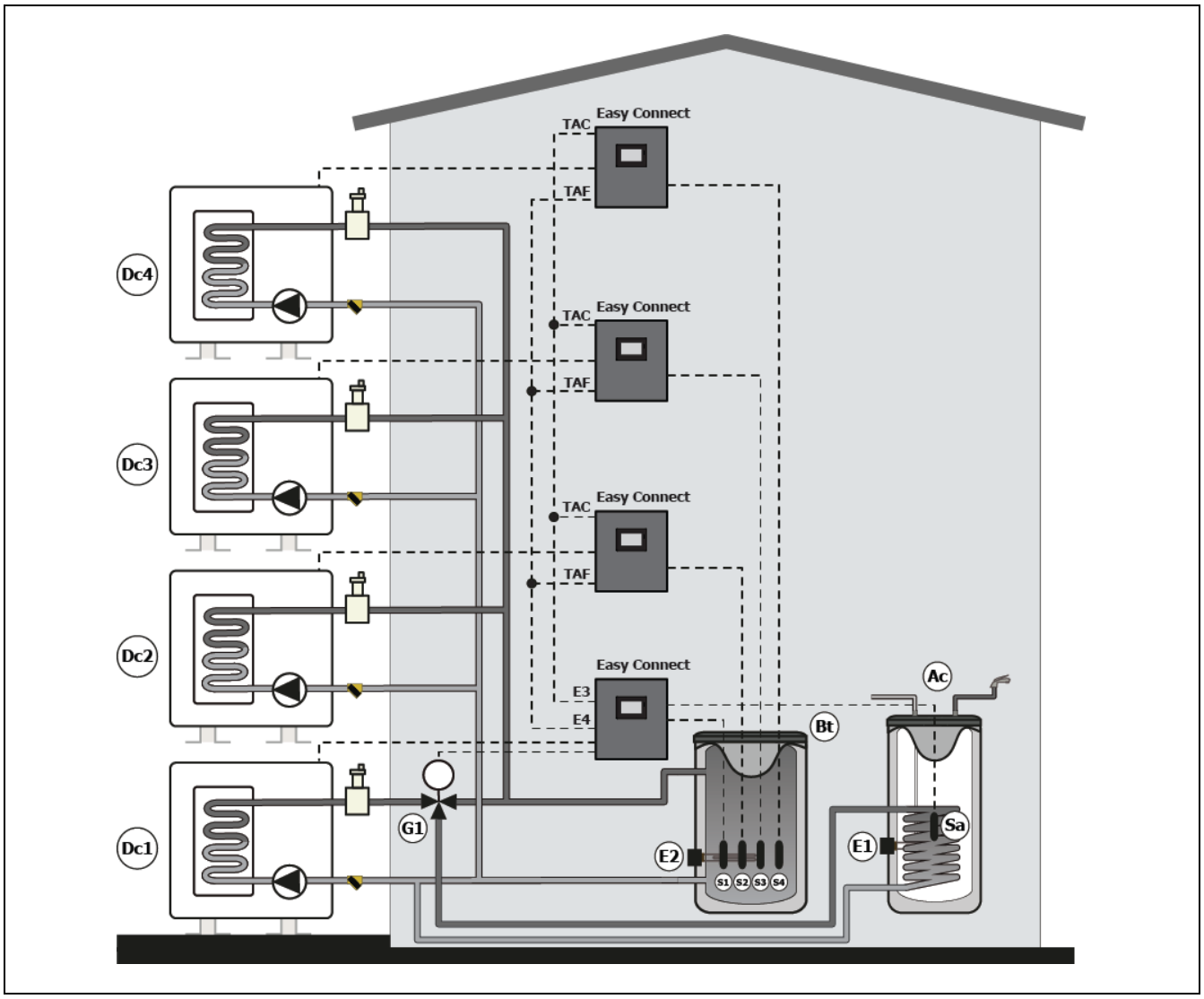

Dc1, **Dc2**, **Dc3**, **Dc4:** Heat pumps in cascade.

G1: DHW 3-way valve G1.

Bt: Buffer tank.

Ac: DHW tank.

S1, **S2**, **S3**, **S4:** Buffer tank sensor.

Sa: DHW sensor.

E1: DHW backup source.

E2: Heating backup source.

Once the hydraulic and electrical connections described in this section have been made, carefully read *"Operation in cascade"* in the *"Additional functions"* section of this manual to configure the parameters for proper operation in cascade.

7.4 Installation with wireless devices Confort iC and/or Sonda iC (Optional)

The **Dual Clima HT EC PRO** heat pump can be used in conjunction with the **iConnect** module to connect **wireless** room temperature measurement devices and improve home comfort by managing up to 3 heating zones, as well as an outdoor sensor. This requires previous connection of the **iConnect** module to the **Easy Connect** indoor unit (see *"Connecting the iConnect module"*).

There are 2 types of wireless devices that can be installed: the **Confort iC** remote control and/or the **Sonda iC** temperature sensor. This is done by connecting a **Receptor RF iC** radio to the **iConnect** module, which is simultaneously compatible with both the **Confort iC** remote control and the **Sonda iC** temperature sensor and can therefore be used with these devices to control the temperature in each zone of the home as desired.

Moreover, the **Confort iC** and **Sonda iC** wireless devices are compatible with the heat pump's **iConnect** connectivity and can therefore be used in conjunction with heat pumps registered in the **iConnect** application.

7.4.1 Installing and connecting the Receptor RF iC (radio module)

The **Receptor RF iC** radio module must be located inside the home so as to provide sufficient radio signal coverage to reach the furthest device. Any metal objects that could interfere with this signal must be avoided as far as possible. If radio signal coverage is poor, try placing the module in another location. Sometimes moving the radio module a few centimetres can greatly improve signal quality. In turn, the **Receptor RF iC** must be connected to the iConnect module, so it is advisable to install it not too far away from it.

The **Receptor RF iC** module is supplied with 2 self-tapping screws and 2 wall fittings for wall mounting. If the self-tapping screws and wall fittings supplied with the module are not suitable for the selected type of wall, use suitable ones. To access the attachment holes, unscrew and remove the module cover and then mount the radio module on the wall:

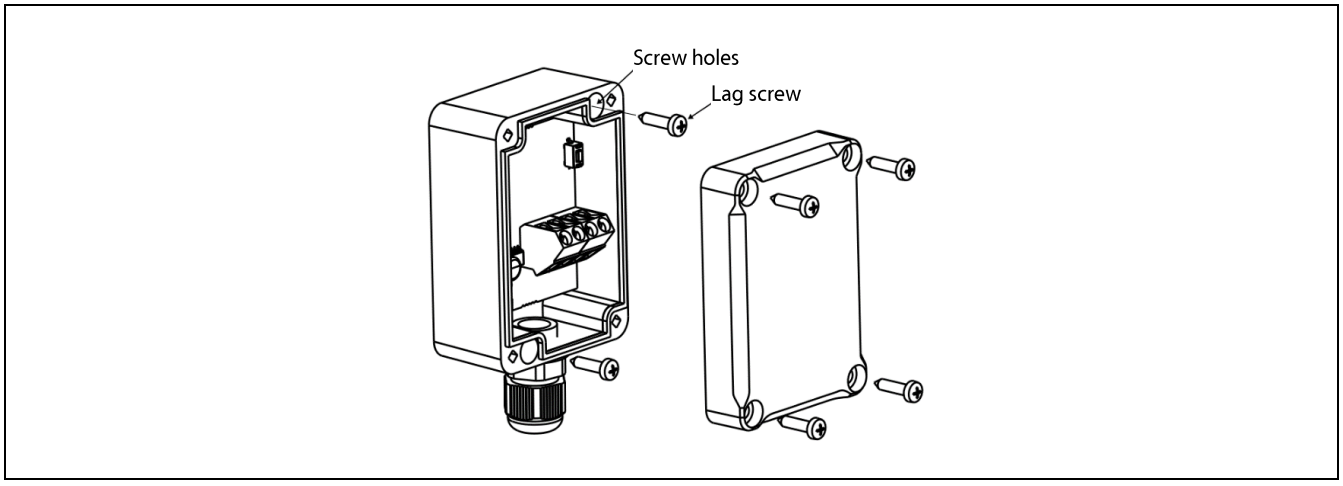

IMPORTANT: Placing the radio module inside a metal housing, such as the heat pump, a metal box, etc., will dampen the radio signal and therefore interfere with and reduce the coverage of the radio module signal.

The **Receptor RF iC** module is supplied pre-wired with a 1.5 m long electrical cable. If you need to extend the supplied cable, it is recommended to use the same type of cable (4x0.25 mm^2) and not to exceed a maximum length of 100 metres. In addition, a communication terminal strip (**+A/-B**), a power supply connector and a power supply with plug (230 Vac / 12 Vdc) are supplied for electrical power supply and communication with the **iConnect** module.

Proceed as follows to make a correct electrical connection between the **Receptor RF iC** radio module and the **iConnect** module:

- **Disconnect the iConnect module from the mains power supply.**
- Connect the yellow (+A) and green (-B) wires of the **Receptor RF iC** radio module cable hose to the communications terminal strip (**+A/-B**) that is supplied and connect the terminal strip to the **J4** connector of the **iConnect** module (see *"Connections Diagram"*).
- Connect the GND and +12V cables from the plug-in power supply to the white wire and brown wire of the **Receptor RF iC** module cable hose, respectively, using the supplied 2-way power supply connector.
- Plug into the mains to turn on the **Receptor RF iC** radio module.
- Connect the **iConnect** module to the mains power supply.

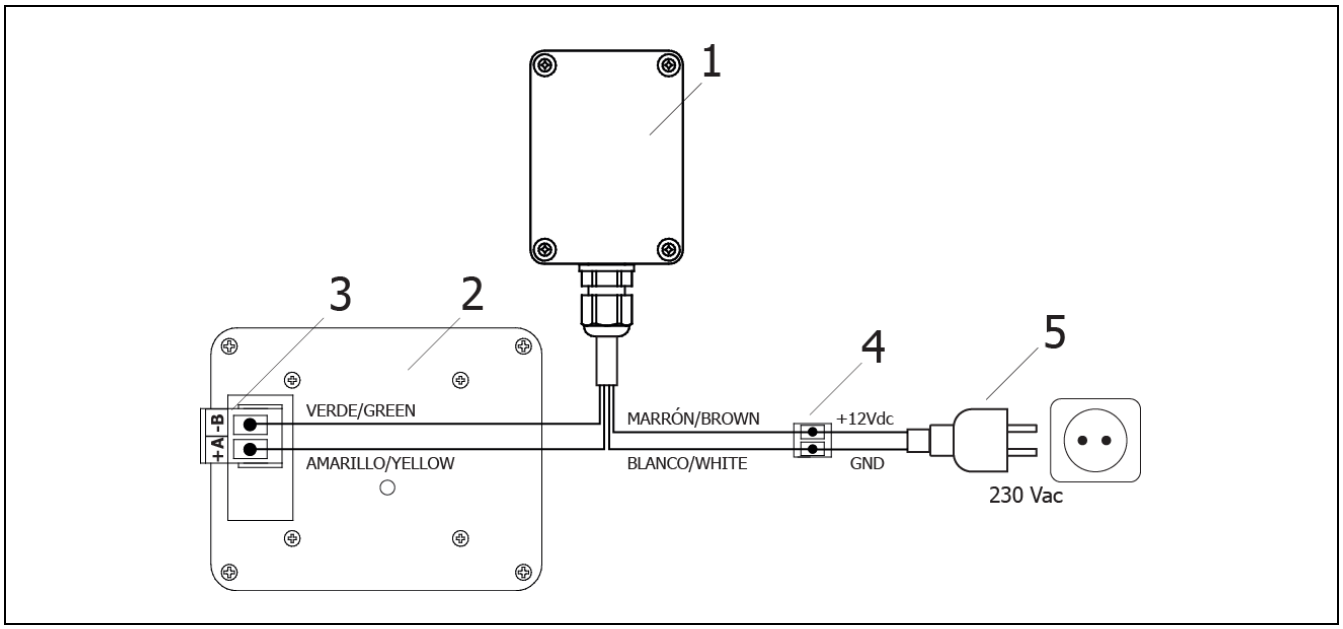

1. Receptor RF iC.

2. iConnect module

3. +A/-B connector.

4. Power supply connector.

5. Electrical power supply.

⚠HAZARD: When making the electrical connections, make sure that the polarity of the connections (+A, -B) and (GND, 12 V) between the radio module, the iConnect module and the power supply is correct. An incorrect connection can cause damage to the heat pump or malfunctions.

IMPORTANT: The maximum length of the communications cable depends on its cross-section. For a cross section of 0.5 mm^2, it must not exceed a length of 100 metres. The cable cross-section must not be less than 0.25 mm^2.

7.4.2 Mounting and location of the Confort iC remote control and the Sonda iC

The **Confort iC** remote control and the **Sonda iC** are designed to be placed inside the home and can be wall-mounted. Also, the **Confort iC** remote control can be placed on a flat surface using the supplied supporting element. The selected location (room, hallway, etc.) must lie inside the heating/cooling circuit that the control is linked to.

Properly choosing the location of these devices inside your home is vital to manage comfortable heating properly. It is advisable to install them in areas of the home that are normally used (living room, dining room, master bedroom, or similar), avoiding rooms where heat or cold could be generated, such as kitchens, bathrooms, refrigerated pantries, etc. Similarly, the chosen location should not cause radio signal interference or be in a zone with low radio coverage. It is also advisable to install them about 1.5 m above the ground and as far away as possible from any source of heat or cold that could distort the temperature reading, such as windows, fireplaces, stoves, radiators, etc.

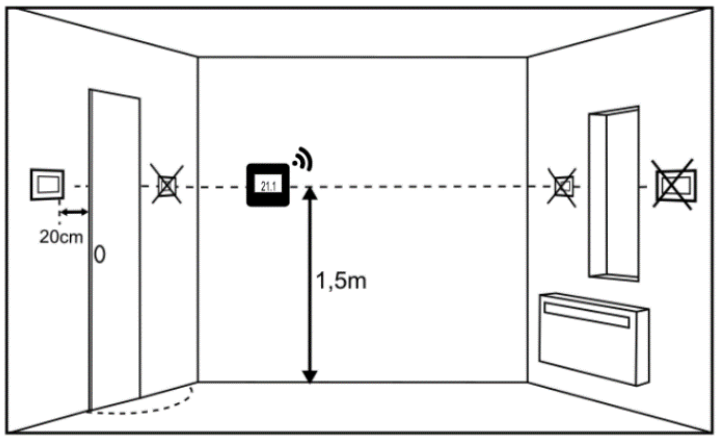

In addition, the **Sonda iC** can be placed outside the home if the intention is to use it as an outdoor temperature sensor. In this case, it is advisable to place the sensor on an outer wall facing north, protected from the rain and humidity and direct sunlight insofar as possible. It should also be located in a place that is easy to access for maintenance tasks required by these types of devices, such as changing the batteries or wireless pairing with the **Receptor RF iC** radio module.

Both the **Confort iC** and the **Sonda iC** are supplied with 2 self-tapping screws and 2 wall fittings for wall mounting. If the self-tapping screws and wall fittings are not suitable for the selected type of wall, use suitable ones. To reveal the mounting holes, remove the rear cover of the device with a flat screwdriver or similar tool. Fasten the cover to the wall and mount the device on the cover again. For more information, carefully follow the mounting instructions supplied with the devices.

After installing the wireless room devices, ensure that they work correctly by pairing them with the **Receptor RF iC** radio module and linking them to the heating/cooling zones where each one is located. To perform proper pairing of the devices, follow the steps described in the *"Pairing Wireless Dev."* sub-menu of the "Settings Menu" in this manual.

8 HEAT PUMP CONFIGURATION

The default configuration of the **DUAL CLIMA HT EC PRO** heat pump is Heating, Cooling and DHW production. If the installation lacks any of these services they **MUST** be disabled, by adjusting the system parameters on the control unit (see *"Settings Menu"*). If any of them is disabled, the operating modes (**10**) for the service in question cannot be selected.

Disabling DHW production

If the installation does not have a storage tank for DHW production, this mode must be disabled. To disable this function, adjust parameter **P63** of the System Parameters (see *Settings Menu*). By default, the heat pump is supplied with DHW production enabled. To disable it, set parameter **P63** to **0**. You must also disconnect the heat pump from the mains and connect it again to validate this change.

Disabling the Heating or Cooling function

If the installation does not have a water circuit designed to work in heating mode (underfloor heating, radiators, etc.) or cooling mode (underfloor cooling, fan coils, etc.), these modes must be disabled. To disable these functions, adjust parameter **P62** of the System Parameters (see *Settings Menu*). By default, the heat pump is supplied with the heating and cooling functions enabled.

To disable heating mode, set parameter **P62** to **1**. The heat pump will automatically enable cooling mode. You must also disconnect the heat pump from the mains and connect it again to validate this change.

To disable cooling mode, set parameter **P62** to **2**. The heat pump will automatically enable heating mode. You must also disconnect the heat pump from the mains and connect it again to validate this change.

IMPORTANT: Leaving a function enabled if the installation is not designed to work with it can cause malfunctioning of the heat pump and SERIOUS damage to the installation.

9 TIME PROGRAMMING

The electronic control of the **DUAL CLIMA HT EC PRO** pump includes a time programmer (**7**) for programming its switch-on and switch-off times and the desired operating modes for each one (weekly programming). To accede to the time programming, press the programming menu touch button on the start screen. Press the home touch button to exit the menu and return to the start screen.

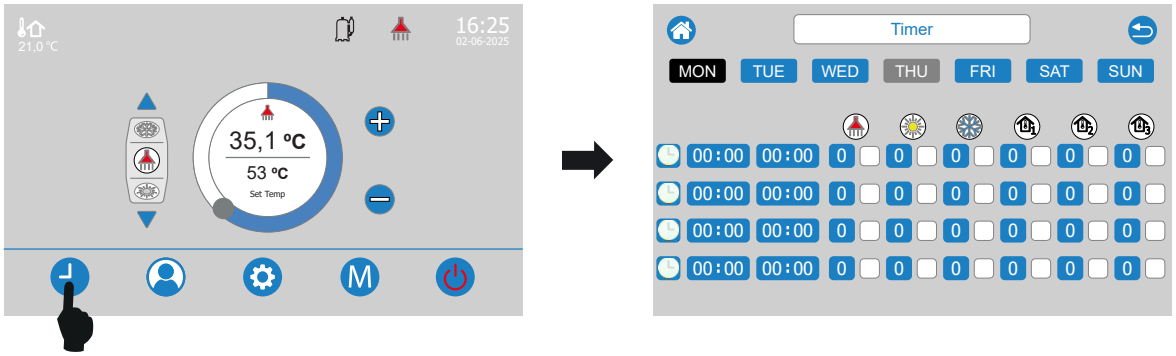

Up to 4 time intervals can be programmed for each day of the week. The desired operating modes can be activated ( ) and the corresponding temperature setpoints can be adjusted for each time interval. The heat pump will only run during the programmed time intervals that are activated, ( ), so it is not necessary to use all the programs.

Take the following steps to program a time interval:

- Select a day of the week.
- Choose the time the interval starts. Programming consecutive time intervals will not function correctly unless there is at least a 5 minute span between the start of an interval and the end of the previous interval.
- Choose the time the interval ends. Programming consecutive time intervals will not function correctly unless there is at least a 5 minute span between the end of an interval and the start of the next interval.
- Press the corresponding white box , to select the operating modes that are going to be active during the time interval in question.
- Adjust the temperature setpoints as desired for each operating mode selected in the previous step.
- Activate the programming periods by pressing the touch button:
  - : Time interval activated.
  - : Time interval deactivated.

NOTE: For proper operation of the time programming and the heat pump, do not set different programming periods during the same time interval.

After setting the time program, the status indicator will appear on the home screen of the control panel, indicating that time programming has been enabled. To restore manual operation of the heat pump using the touch button, **all the periods activated in the** time program must be deactivated.

10 WIRELESS DEVICES CONFORT iC and SONDA iC (OPTIONAL)

The **DUAL CLIMA HT EC PRO** heat pump can also be supplied along with wireless devices to improve home comfort by managing up to 3 heating/cooling zones, as well as an outdoor sensor.

There are 2 types of wireless devices that can be connected: the **Confort iC** remote control and/or the **Sonda iC** temperature sensor. Both the **Confort iC** remote control and the **Sonda iC**, temperature sensor are compatible and can be used simultaneously with the **Receptor RF iC**, so a combination of remote controls or room sensors can be prepared for each Zone to ensure customised management of home comfort.

The **Confort iC** remote control and the **Sonda iC** are compatible with the **iConnect** connectivity of the heat pump, which means that if the heat pump is registered in the **iConnect** application remote controls and/or wireless sensors can be installed.

Operation of the Confort iC wireless remote control

The **Confort iC** wireless remote control is designed to manage the desired room temperature in the area of the home where it is located by sending a radio signal to the **Receptor RF iC** module connected to the heat pump. The two-way radio communication is encrypted, allowing secure transmission of information from the heat pump to the remote control and vice versa, including alarm statuses, operating mode and weekly schedule, among other information. The remote control has a backlit LCD screen that displays this information.

When a **Confort iC**, wireless remote control is connected, the heat pump can be controlled from the room where it is installed. The various temperatures and parameters that can be selected in the remote control can be changed on the heat pump's control panel, as well as in the **iConnect** application (if it is registered). If a time schedule has been programmed and the heat pump is registered in the **iConnect** application, the heat pump will run exclusively according to the time schedule programmed in the **iConnect** application.

The wireless remote control is easy to install; simply follow the instructions in the section titled *"Installation with Confort iC wireless remote control and Sonda iC temperature sensor (Optional)"* in this manual. To ensure proper operation, read the instructions provided with the remote control carefully.

Operation of the Sonda iC wireless temperature sensor

The **Sonda iC** wireless temperature sensor is designed to measure the desired room temperature in the indoor area or outdoor temperature of the home and send it to the heat pump via an encrypted radio signal to the **Receptor RF iC** radio module. This temperature is displayed on the heat pump screen and helps to improve the degree of comfort in the home by maintaining the temperature setpoint selected on the heat pump or the **iConnect** application.

The **Sonda iC** temperature sensor is easy to install; simply follow the instructions in the section titled *"Installation with Confort iC wireless remote control and/or Sonda iC temperature sensor (Optional)"* in this manual. To ensure proper operation, read the instructions provided with the sensor carefully.

11 "*iConnect*" CONNECTIVITY

The **DUAL CLIMA HT EC PRO** heat pump can be connected to the **DOMUSA TEKNIK** ***"iConnect"*** connectivity platform. The **iConnect** communications module is supplied standard with the **Easy Connect** indoor module and the range of **Fusion EC** and **Acqua EC** hydraulic accessories. Once the communications module has been connected with the indoor unit (see *"Connecting the iConnect module")*, the user will be able to register the heat pump in the **iConnect** application for smartphones, tablets or similar devices; the user can then manage all the heat pump and heating/cooling installation parameters remotely and receive warnings and alarms generated by the installation from anywhere in the world.

11.1 Requirements for the connection to *iConnect*

The electronic control unit is equipped with a Wifi module that is used to connect the heat pump to the Wifi network of the home and from there to the **iConnect** platform. It is therefore essential for the **home's Wi-Fi network to have sufficient coverage** where the **iConnect** module is installed. The Wifi module is only compatible with Wifi networks using a frequency of **2.4 GHz**.

The **iConnect** application can be connected and registered from any device with an **Android 4.4** operating system or higher, or **iOS 13** or higher (**iPhone 6S** terminal or higher), and must have a **Wifi** connection, a **Bluetooth** connection and enable the **location** of the heat pump. It will first be necessary to download the application free of charge to the corresponding device from **Google Play** (Android) or **App Store** (iOS).

If Wifi is not available at the location where the **iConnect** module is installed, or the signal is too weak, a wide range of Wifi network repeaters and amplifiers are available on the market. Described below are 2 methods to increase Wifi network coverage in the home:

Wifi repeater: This device, which is very easy to install, picks up the Wifi signal in the home and repeats it, thereby increasing Wifi network coverage. The repeater must be installed at a location in the home with Wifi coverage, halfway between the Wifi network router and the **iConnect** module, ensuring that the signal reaches the module.

This method is the most recommended, since it is simple, easy to install and more economic than other methods, provided that the distance between the router and the **iConnect** module is not too far.

PLC devices: These are packs of 2 or more devices that are easy to install and used to transmit the Wifi router signal through the home's electrical network. One of the devices is connected to the Wifi router in the home and sends the Wifi signal into the mains network through the socket the router is plugged into. The other devices are plugged into the electrical sockets where Wifi coverage is needed. They receive the signal through the mains network and convert it into a Wifi signal, thereby increasing Wifi coverage.

This method is recommended in large homes or buildings, with multiple stories or many rooms and when the distance between the router and the **iConnect** module is too far for a simple Wifi repeater. Although these devices are also easy to install, the method is a bit more complex and expensive, since at least 2 devices are required.

11.2 Registering the heat pump in *iConnect*

To operate the heat pump remotely using the **iConnect** APP, it has to be registered in the ***iConnect*** connectivity platform; therefore, the APP must be downloaded and installed in the Smart device used to register the heat pump.

This process consists of 3 steps; first, registering the user in the ***iConnect*** platform; then registering the heat pump serial number in the control panel display and finally, registering the heat pump in the application.

Registering the user

After downloading and installing the application, open the application and press **"Register user"** in the session start screen. Fill in the registration form and then press "Connect". If registration is successful, access the application by starting a session with the e-mail address and password entered in the form.

Registering the Serial Number

For a heat pump to be registered in the **iConnect** APP, it must be identified by its serial number using the control panel screen. The serial number can be found on the warranty certificate supplied with the heat pump documents, or on the nameplate on the side of the **DUAL CLIMA** outdoor unit. It is very important to enter the serial number correctly; otherwise, it may not work correctly after it is registered in the **iConnect** APP.

Go to the "Operating status" option in the "Settings" menu to register the serial number. Press the serial number editing button to go to the numbers tab where the number is entered.

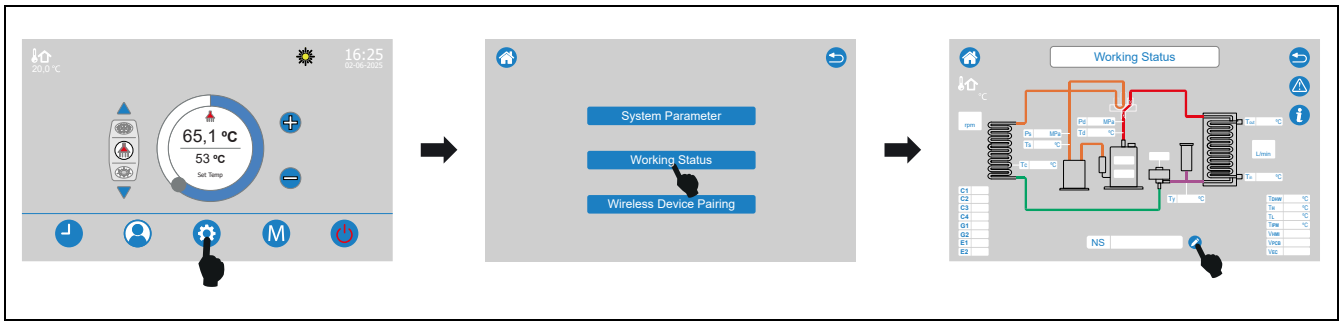

After entering the serial number, make sure it is correct by checking it against the number in the warranty certificate or the heat pump nameplate.

IMPORTANT: It is very important to enter the serial number correctly; otherwise, it may not work correctly after it is registered in the iConnect APP.

Registering a heat pump

The **Bluetooth** connection and **Location** of the mobile device must be activated before registering the heat pump. The APP uses the **location** function exclusively during the registration process to locate the heat pump and update the local time and outdoor temperature. Therefore, once the registration is complete, this function will no longer be needed to use the application and can be deactivated in the device.

If the user has not registered any other device before starting the session in the **iConnect** APP, the device registration screen will appear directly. Press **"Register a device"** and follow the steps indicated by the APP to complete the process. If some other device (biomass boiler and/or heat pump) is already registered by the same user, the other heat pump will have to be registered by going to

"Settings/Devices", pressing on the menu ≡ at the top left of the "Start" screen. Once the device editing screen opens, press the **"+"** icon and follow the steps given by the APP to complete the process.

Described below are the main steps required to register a heat pump:

- **Selecting the type of device:** Use this screen to select the **DUAL CLIMA** heat pump option.
- **Connecting the heat pump with the Smart device:** Press the ☐ button of the "**iConnect Wi-Fi**" option in the "User" menu 👤 on the control panel display. This will activate the **Bluetooth** connection and display the "**iConnect ON**" indicator in the middle of the screen to connect the Smart device to the heat pump.
- **Setting up the home Wifi network:** The APP will request the **Name** and **Password** of the home Wifi network and then connect to it.
- **Registering the heat pump:** Once connected to the Wifi network, the APP will register the heat pump in the ***iConnect*** platform.

After successfully completing the heat pump registration process, the APP will return to the "Edit devices" screen.

This **initial registration** will link a **"main" user** to the heat pump. This **main user** is unique; therefore, in a subsequent registration, all the information of the previous user will be deleted and replaced with a new user. The main user can provide other users with access to the APP by using the **"Invite"** option in the "Settings/Devices" menu of the application. "Guest" users can use the **iConnect** application from any device it is installed in and without restrictions.

A user (with the same e-mail address and password) can also access several devices from the same APP, either as the main user by carrying out the initial registration of the corresponding devices or as a guest user if they have been invited from these devices. The user can use the APP devices menu (right side of the APP) to select the device to be managed at any time, as well as the heating/cooling zone, if more than one has been installed.

11.3 Description of the *iConnect* Application

The **iConnect** APP is used for easy, user-friendly remote access to the heat pump "User" parameters and heating/cooling installation in the home from anywhere in the world. The main functions of the **iConnect** APP are as follows:

- **Status display** of the heat pump and heating/cooling installation in real time, including demand, room temperatures, heat pump temperatures, DHW temperature, water flow rate, etc.
- **Setpoint selection** for room temperature, heat pump, DHW and heating/cooling circuits at any time.
- **Programming weekly schedules** for all the heating/cooling circuits and all the accessories connected to the heat pump.
- Sending **alerts, warnings,** etc. from the heat pump.
- Displaying evolution of energy consumption in **charts**, as well as operating time meters.
- Selecting the application language.

11.4 *iConnect* Application Map

The **iConnect** Application is very user-friendly and easy to use. Therefore, an instruction manual is not needed to use it. Nonetheless, the **DOMUSA TEKNIK** website, **www.domusateknik.com/es/servicios/apps**, contains technical information and tutorials for users who have any questions on how it should be used. In addition, the QR code on the back cover of this manual can be used for direct access to the **iConnect** area of the **DOMUSA TEKNIK** website.

A visual guide of the APP map contents is provided below. The APP has 3 main areas:

- **"Start" Screen:** The home screen of the APP, which displays the status of the installation in real time and is used to select the various setpoints and operating modes.
- **Main Menu:** This menu contains all the main options of the APP. It is located on the left side of the APP and is accessed by the ≡ button on the top left of the "Start" Screen.
- **Installations Menu:** This menu is used to select the heat pump and heating/cooling zone to be displayed, if more than one device is registered and more than one zone is installed. It is located on the right side of the APP and is accessed by the button on the top right of the "Start" Screen.

"Start" Screen

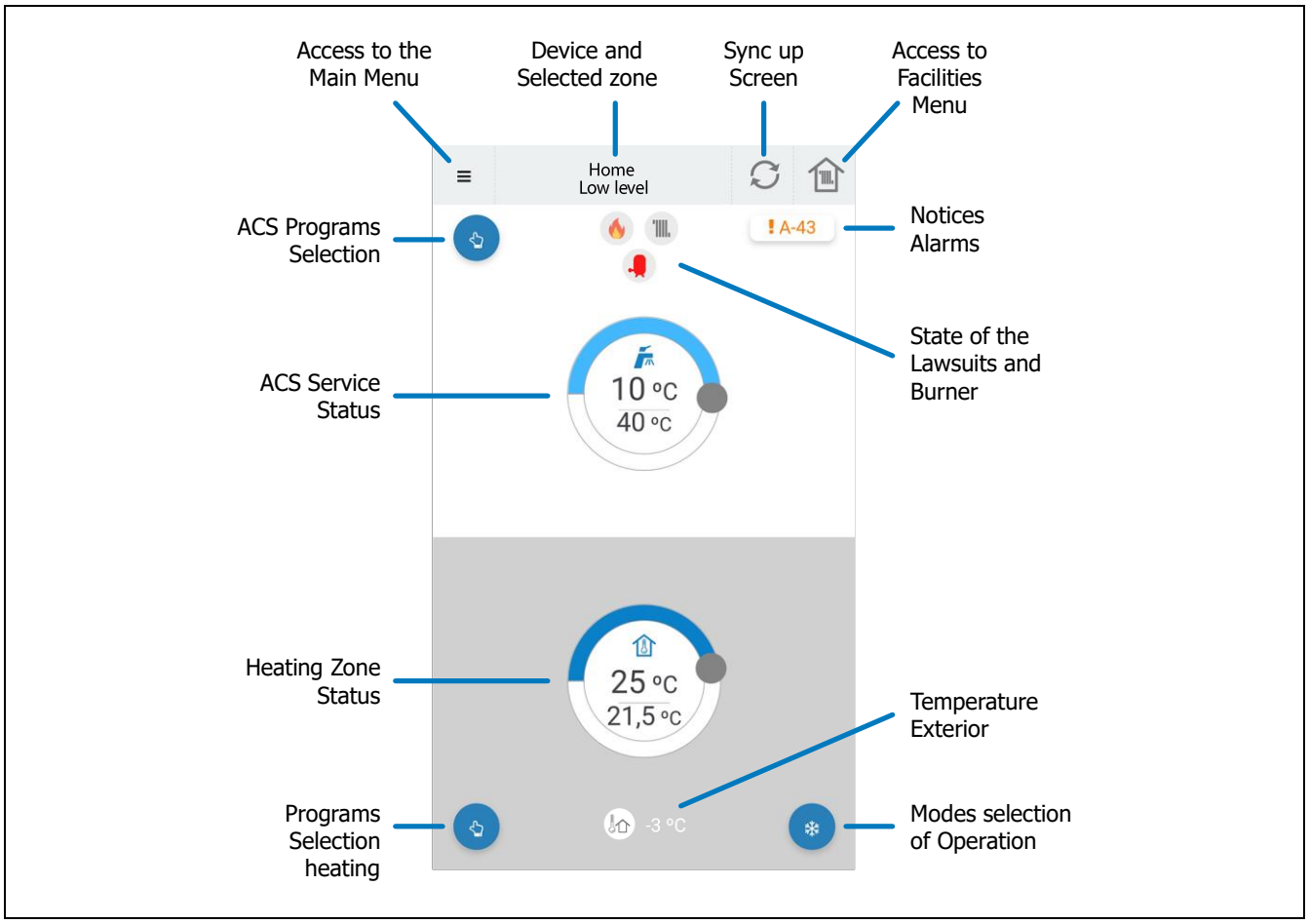

Main Menu

This is accessed by pressing on the ≡ button at the top left of the "Start" screen and displays the following options:

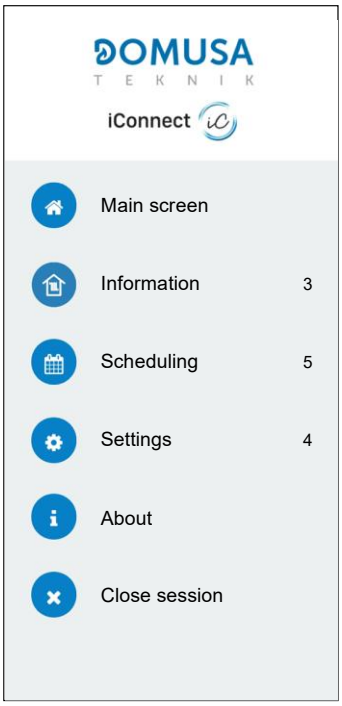

Start: Press this option to return to the "Start" screen.

Information: This option is used to access the technical parameters of the *"Heat Pump"* and the *"Charts"* and *"Meters"*.

Programming: This option is used to adjust all the *programmed schedules* available in the heat pump.

Settings: This option is used to access the APP's *"General"* settings, the settings of registered *"Devices"*, heating/cooling *"Zones"* and the user *"Account"*. It can be used to activate the **OTC** operating mode of the heat pump and to select the **K curve** of operation in each heating zone *(see "Operation according to outdoor temperature conditions OTC")*.

About: This option is used to access the *"Conditions of Use"* and *"Privacy Policy"* and to verify the version of the downloaded APP at any time.

Close Session: Press on this option to close the user session and return to the *"Start Session"* screen of the APP.

12 AIR HYDRAULIC KITS (OPTIONAL)

All the models in the range of **DUAL CLIMA HT EC PRO** heat pumps can be connected to an **AIR Hydraulic Kit** to manage more than one heating/cooling circuit. Up to 3 heating circuits can be managed, depending on the **AIR Hydraulic Kit** model that is selected. Described below are certain general guidelines on the operation of the heat pump when it is connected to an **AIR Hydraulic Kit**. Refer to the instruction manual supplied with the kit for a detailed explanation of its operation.

Operation of the direct heating/cooling circuit

When the **AIR Hydraulic Kit** is equipped with a direct circuit (AIR "D" Kit), this circuit will work with the temperature setpoint of the selected heat pump and the room temperature set in the installed room device, if there is one. In addition, direct circuit operation can be selected according to outdoor temperature conditions (**OTC**). In this case, the temperature setpoint of the heat pump will depend on the outdoor temperature and the K Curve selected in parameters **P154**, **P155** and **P156** of the "System parameters" menu (see *"Settings Menu"*), and depending on the Zone that corresponds to the circuit, respectively.

Operation of the combined circuit in Zone 2

When the **AIR Hydraulic Kit** is equipped with a combined circuit (AIR "M" Kit), this circuit will correspond to Zone 2 heating/cooling and work with the temperature setpoint of the water flow selected on the Zone 2 temperatures screen and the room temperature set in the installed room device, if there is one. In addition, combined circuit operation can be selected according to outdoor temperature conditions (**OTC**). In this case, the temperature setpoint of the water flow will depend on the outdoor temperature and the K Curve selected in parameter **P155** of the "System parameters" menu (see *"Settings Menu"*).

13 ADDITIONAL FUNCTIONS

13.1 Installation condensations protection function

When the heat pump is running in Cooling mode, condensation and damp areas can appear in the installation, depending on the type of installation (e.g., underfloor cooling), the temperature setpoint of the heat pump, the climate zone, orientation of the home and the relative humidity at the time. This can generate hazardous conditions for the persons in the home (e.g., slips on wet underfloor cooling surfaces), as well as damage caused by the humidity. To prevent condensation, be especially careful when choosing the Cooling setpoint. It should not be lower than the dew point for the inside of the home when relative humidity is high.

In addition to following the recommendations explained above, the electronic control unit of the indoor module is provided with a function for the prevention of hazardous condensation in the installation. A humidity sensor is installed in the cooling circuit or in the area of the home presenting the highest risk (see "Connecting a humidity switch sensor" and when the sensor signal is triggered, the electrical control unit will change the heat pump flow temperature to prevent condensation in the installation and even switch off the heat pump if the hazard cannot be eliminated. The " " status icon will be displayed on the home screen of the control panel, indicating that the protection function is active. Once the humidity sensor signal is reset and a reasonable period of time has elapsed, the heat pump will switch on again.

This function cannot be enabled until a humidity sensor is installed and connected to the **Easy Connect** indoor module (see *"Connecting a humidity switch sensor"*). To enable this function, set parameter **P125** of the "System Parameters" menu to **1** (see *"Settings Menu"*).

13.2 Solar energy utilisation function

When the **DUAL CLIMA HT EC PRO** heat pump is installed in a home equipped with a photovoltaic solar installation, this function can be used for the electronic control unit of the indoor unit to make use of the **surplus** of electrical power generated by the photovoltaic solar installation by storing it as thermal energy in the installation's water storage tanks (DHW and/or buffer tank). This is achieved by installing an energy meter in the main electrical power supply that continuously reads the energy surplus flowing into the grid. When the surplus is sufficient to switch on the heat pump, the pump will be activated to superheat the DHW storage tank and/or superheat or subcool the buffer tank by changing their temperature setpoints. The electronic control unit will continuously adjust the power consumed by the heat pump to the amount of surplus energy. The " " status icon will be displayed on the home screen of the control panel, indicating that the solar utilisation function is active. The heat pump will switch off if it detects that the surplus energy is not enough to keep it running or new temperature setpoints have been reached in the storage tanks.

For optimal use of surplus solar energy, this function should be enables in installations that have both a DHW storage tank and a buffer tank.

This operating mode cannot be enabled until an energy meter is installed and connected to the **Easy Connect** indoor module (see *"Connecting the energy meter"*). To enable this function, set parameter **P126** of the "System Parameters" menu to **1** (see *"Settings Menu"*).

Once the function is enabled, parameters **P127** (buffer tank superheating), **P128** (buffer tank subcooling) and **P129** (DHW storage tank superheating) of the "System Parameters" menu (see *"Settings Menu"*) can be used to adjust the superheating and/or subcooling setpoints of the tanks in the installation. When the solar energy utilisation function is activated, the heat pump will superheat and/or subcool these tanks to reach the new setpoints set in these parameters, provided there is a continuous surplus of electrical energy produced by the photovoltaic solar energy installation during the entire process. For the solar energy utilisation function to be effective, the superheating and subcooling setpoints must be respectively higher and lower than those set for normal operation of the heat pump.

The **P130** parameter of the "System Parameters" menu (see *"Settings Menu"* can also be used to set the minimum energy surplus required to activate the solar energy utilisation function. The setting of this parameter will vary depending on the model of the **DUAL CLIMA HT EC PRO** outdoor unit and it is not recommended to change the factory setting of each model. This parameter should be changed by qualified personnel: a setting that is too low can cause fire or frequent switching off of the outdoor unit and a setting that is too high can cause loss of function and waste of energy surpluses. A correct setting must take into consideration the most extreme weather conditions expected in the region where the outdoor unit is installed, during which the **consumption required to switch on** the outdoor unit will be maximum.

13.3 Operation in cascade

The electronic control unit of the **Easy Connect** indoor module can manage cascade operation, in both Heating and Cooling modes, of up to 4**DUAL CLIMA HT EC PRO** outdoor units. This function activates Heating or Cooling of the water in a buffer tank in outdoor units installed in cascade (see "Installation in cascade"). In addition, the main unit (**No. 1**) can also manage several other options: the production of DHW by a storage tank connected to it, operation of backup power supplies **E1** and **E2**, operation of installation pump **C4** or zone pumps **Z1** and/or **Z2**, operation with the room sensor, the SG Ready function or the solar energy function, if they are available. For proper configuration and management of these functions in the main unit, follow the installation and operation instructions for each function explained in this manual.

To enable this function in cascade, first set parameter **P121** of the "System Parameters" menu to **1** in each heat pump (see *"Settings Menu"*). After setting these parameters, set the **P132** parameter of each unit to number the outdoor units from **1** to **4**, where heat pump **No. 1** is the main unit and the rest are secondary units that will start up one after another if the main unit cannot achieve the cooling or heating temperature setpoint. Status icons , ,  or , will be displayed on the home screen of the control panel in each indoor module, indicating that operation in cascade is enabled and the number of the corresponding heat pump in the switch on/off sequence.

The switch on/off sequence in cascade is configured by adjusting the temperature hysteresis settings for each outdoor unit in parameters **P133** (no. 1), **P134** (no. 2), **P135** (no. 3) and/or **P136** (no. 4), respectively. **These parameters must be set to the same setting in all the heat pumps comprising the cascade installation.** The electronic control unit of each **Easy Connect** module in cascade will switch its corresponding heat pump on or off depending on the selected hysteresis setting and the real temperature of the buffer tank, registered by the sensor connected to it, as shown in the following figure.

Lastly, to activate operation in cascade, select the desired operating mode, Heating or Cooling, in the main indoor module (**no. 1**) (see *"Operation"*) and select **the same temperature setpoint of the buffer tank** for that mode in each heat pump comprising the cascade (see *"Selecting temperatures"*).

NOTE: The hysteresis parameters (P133, P134, P135 and P136) and the operating temperature setpoints must be the same in all the heat pumps installed in cascade.

The following diagrams describe the switch on/off sequence for each **DUAL CLIMA HT EC PRO** outdoor unit, depending on the operating mode selected in the main unit:

Heating mode

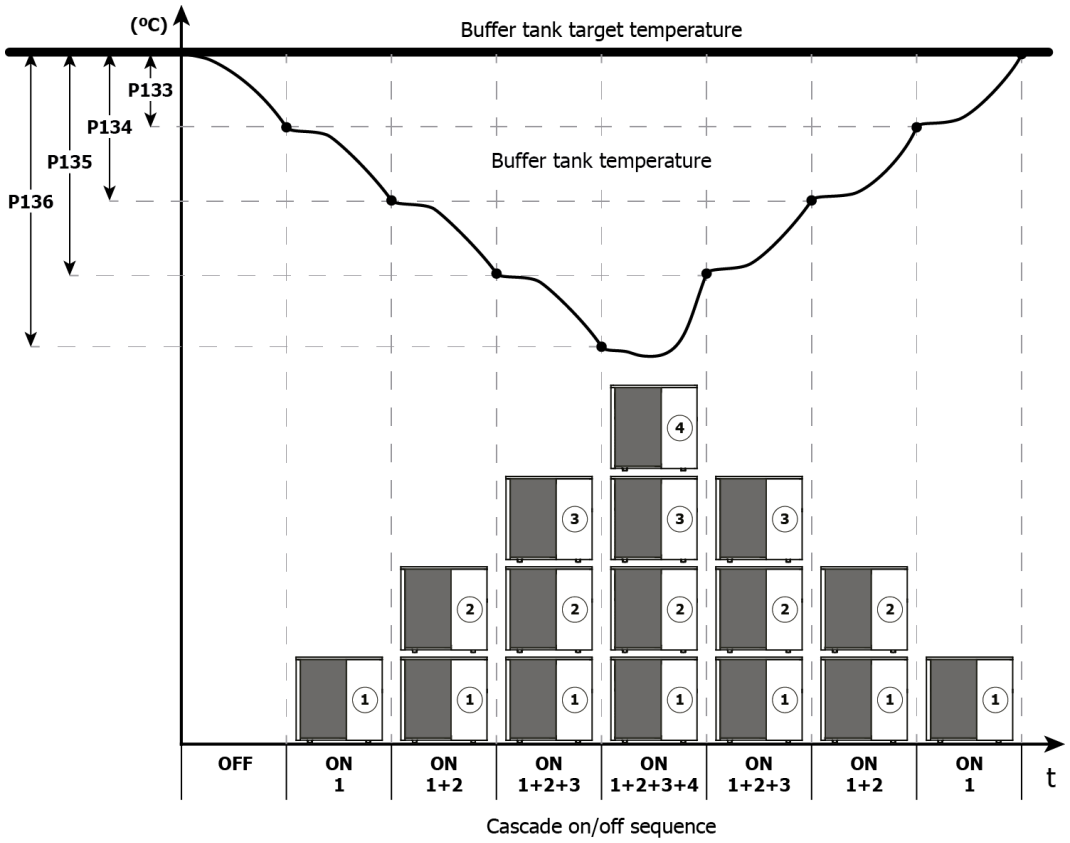

Cascade on/off sequence

Cooling mode

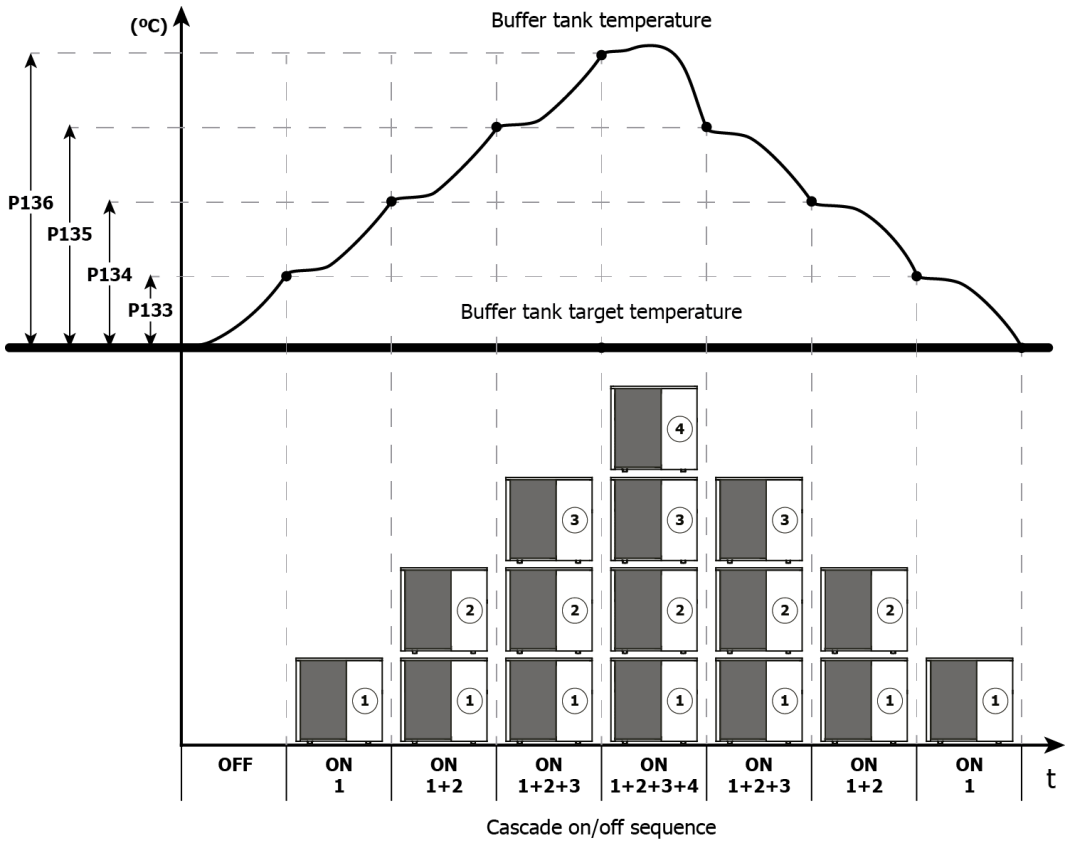

Cascade on/off sequence

14 USER MENU

The **DUAL CLIMA HT EC PRO** module electronic control has a User Menu (**8**) for the user to configure, manage and view different functions. To accede to the User menu, press the user menu touch button on the start screen. Press the home touch button to exit the menu and return to the start screen.

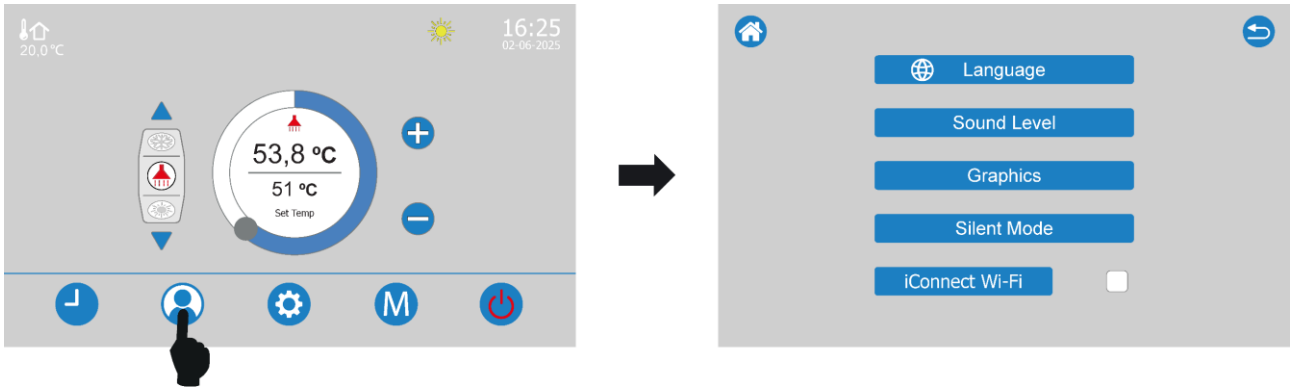

Language

Several languages are available on the **DUAL CLIMA HT EC PRO** heat pump electronic control unit, and the preferred language can therefore be set. When a language is selected, it will be used on all the displays, menus, and descriptions.

Sound adjustment

This option can be used to adjust or mute the touch screen sound volume.

Graphics

The **DUAL CLIMA HT EC PRO** heat pump has an option for measuring the renewable energy generated in the installation. This option can be used to consult the renewable energy generated by the heat pump each day, month, or year.

Silent Mode

This option allows you to select and adjust the Silent Mode settings using the following parameters:

Code	Definition	Range	Default
P15	Silent Mode	0 (Off) 1 (Silent Mode 1) 2 (Silent Mode 2)	0
P16	Start Time	0 ~ 23 (hour)	0
P17	End Time	1 ~ 24 (hour)	24

iConnect Wi-Fi

Press this option to activate the **Bluetooth** signal ("iConnect ON") of the **iConnect** module. Once it is activated, the user can start registering the heat pump in the **iConnect** APP. The first step is to download and install the APP in a mobile phone, tablet or similar device and access the "**Register device**" option of the "Settings/Devices" menu in the main menu (see *"Registering the heat pump in iConnect"*). The **iConnect** APP can be used for remote access to all the parameters used to manage comfort in the home from anywhere in the world (see *"**iConnect** connectivity"*).

15 SETTINGS MENU

The **DUAL CLIMA HT EC PRO** module electronic control has a Settings Menu (**9**) for the user to accede and configure and view different **technical parameters**, functions and statuses. To accede to the Settings menu, press the settings menu touch button on the start screen. Press the home touch button to exit the menu and return to the start screen.

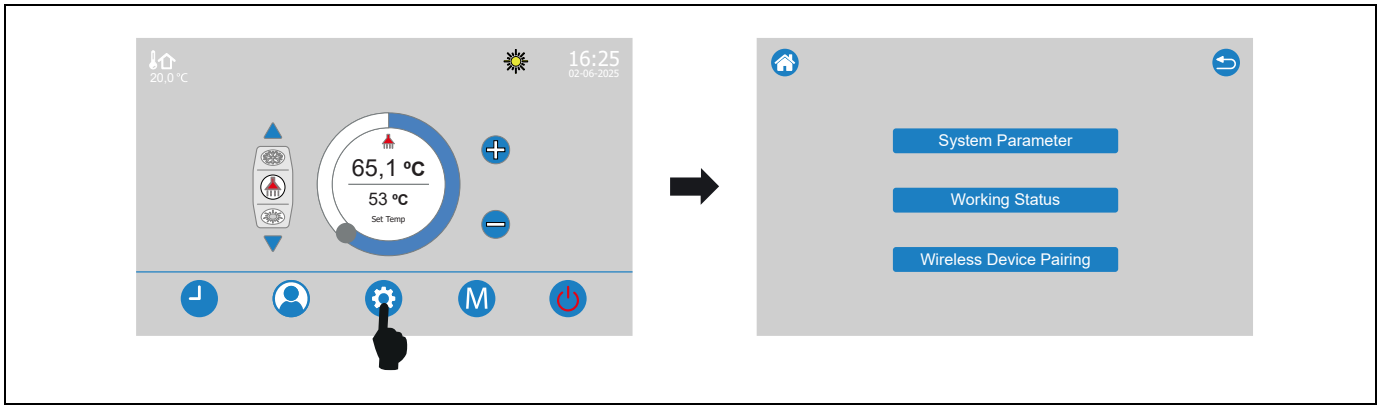

15.1 System Parameters

The Settings menu allows to manage all the technical parameters (**P**) who affect the operating of gas and water circuits of the **DUAL CLIMA HT EC PRO** heat pump. Any incorrect adjustment of the settings in this sub-menu could cause failure and/or breakdown of the appliance, and most of the system parameters must therefore only be adjusted by authorised staff (installer, Technical Assistant Service, …).

To accede to the sub-menu of the Setting menu, enter password"99". Once in the menu, press and buttons to browse through the setting parameters. Press the value of the current parameter to display the numeric screen to adjust the value and validate it by pressing "**Enter**".

There follows a list of the settings that can be adjusted by the installer. Any adjustment of settings not on this list could cause serious failure and/or breakdown of the heat pump and **DOMUSA TEKNIK** will not be held liable for any damage caused by their incorrect modification by **unauthorised persons**.

Code	Definition	Range	Default value
P02	Heating temperature setpoint	25~75ºC	45ºC
P03	Cooling temperature setpoint	7~25ºC	12ºC
P04	DHW setpoint temperature	0:Off; 25~70ºC	45ºC
P10	Interval of days for anti-legionella	7~ 99 days	7
P11	Anti-legionella function start time	0~23	23
P12	Anti-legionella duration	5~99 minutes	10
P13	Anti-legionella setpoint	50 ~ 70 ºC	70ºC
P14	Anti-legionella function	0 (Auto Mode) 1 (Manual Mode) 2 (Disabled)	2
P20	Circulation pump operating mode (**C1**)	0: Always running 1: Stop on reaching setpoint 2: Start-up every 15 minutes	0
P21	Anti-freeze interval	5~50min	30
P22	External temp. activating backup heating (**E2**)	-30~20ºC	0ºC
P23	External temp. activating backup DHW (**E1**)	-30~20ºC	0ºC
P24	Hysteresis activating **E1** and **E2**	1~15ºC	5ºC

P25	Anti-freeze activation temperature	-15~5ºC	3ºC
P35	Maximum DHW temperature with compressor	0~70ºC	70ºC
P36	**E1** and **E2** activation time interval	0~999 min	15
P58	Flow-return temperatures difference setpoint for Heating mode.	3~8 ºC	5 ºC
P59	Minimum **C1** circulation pump speed	2~8 (20% - 80%)	8
P62	Heating/cooling mode activation	0: Heating + cooling 1: Cooling only 2: Heating only	0
P63	DHW mode activation	0: Disabled 1: Enabled	1
P81	**E1** and **E2** operating mode	0: Backup source mode 1: Auxiliary source mode 2: Passive combined mode 3: Active combined mode 4: Combined multi-stage mode	0
P82	External temp. activating auxiliary source	-30~20ºC	-15
P117	Hysteresis for activation with room sensor in Heating mode	0,2~5 ºC	0,5 ºC
P118	Hysteresis for activation with room sensor in Cooling mode	0,2~5 ºC	0,5 ºC
P121	Buffer tank function	0: Disabled 1: Enabled	0
P122	Hysteresis for heating or cooling activation with buffer tank	5~40 ºC	5 ºC
P123	Buffer tank heating setpoint	0: OFF; 25~75 ºC	OFF
P124	Buffer tank cooling setpoint	0: OFF; 7~25 ºC	OFF
P125	Condensations protection function	0: Disabled 1: Enabled	0
P126	Solar energy utilisation function	0: Disabled 1: Enabled	0
P127	Solar reheating setpoint for buffer tank	0: OFF; 25~75 ºC	OFF
P128	Solar re-cooling setpoint for buffer tank	0: OFF; 7~25 ºC	OFF
P129	Solar reheating setpoint for DHW tank	0: OFF; 25~70 ºC	OFF
P130	Power excess to activate solar energy utilisation function	750 W~6200 W	**DUAL CLIMA 6HT EC PRO:** 1450 W **DUAL CLIMA 9HT EC PRO:** 2300 W **DUAL CLIMA 12HT EC PRO:** 3100 W **DUAL CLIMA 16HT EC PRO:** 4500 W **DUAL CLIMA 19HT EC PRO:**5500 W
P131	Energy meter model	0: Not connected 12: Eastron SDM230 52: Eastron SDM630	0
P132	Operation in cascade	0: Disabled 1~4: Cascade numeration	0
P133	Hysteresis for activation of nº1 heat pump in cascade (dT1)	1~40 ºC	5 ºC
P134	Hysteresis for activation of nº2 heat pump in cascade (dT2)	1~40 ºC	7 ºC
P135	Hysteresis for activation of nº3 heat pump in cascade (dT3)	1~40 ºC	9 ºC
P136	Hysteresis for activation of nº4 heat pump in cascade (dT4)	1~40 ºC	11 ºC
P139	Flow-return temperatures difference setpoint for Cooling mode.	3~8 ºC	5 ºC

P140	Zone 1 room temperature setpoint	0: Off; 10.0~35.0ºC	Off
P141	Zone 2 room temperature setpoint	0: Off; 10.0~35.0ºC	Off
P142	Zone 3 room temperature setpoint	0: Off; 10.0~35.0ºC	Off
P146	Zone 1 room temperature correction	-5.0~+5.0ºC	0,0 ºC
P147	Zone 2 room temperature correction	-5.0~+5.0ºC	0,0 ºC
P148	Zone 2 room temperature correction	-5.0~+5.0ºC	0,0 ºC
P150	Zone 1 room device type	0: Not connected 1: Sensor iC 2: Comfort iC 4: Sensor AF 5: Thermostat	0
P151	Zone 2 room device type	0: Not connected 1: Sensor iC 2: Comfort iC 4: Sensor AFS (AIR Kit) 5: Thermostat	0
P152	Zone 3 room device type	0: Not connected 1: Sensor iC 2: Comfort iC 4: Sensor AFS (AIR Kit) 5: Thermostat	0
P153	OTC outdoor sensor	0: Not connected 1: Sensor iC 4: Sensor AFS (AIR Kit) 5: Sensor AF (Easy Connect)	0
P154	K curve for Zone 1 (OTC mode)	0: Off; 0.2~6.0	Off
P155	K curve for Zone 2 (OTC mode)	0: Off; 0.2~6.0	Off
P156	K curve for Zone 3 (OTC mode)	0: Off; 0.2~6.0	Off
P159	Zone 2 combined water flow temperature setpoint	0: Off; 10.0~P165ºC	Off
P201	SG Ready function activation	0: disable, 1: enable	OFF
P202	Recommended heating switch-on setpoint	OFF, 25ºC~75ºC	OFF
P203	Heating switch-on setpoint	OFF, 25ºC~75ºC	OFF
P204	Recommended cooling switch-on setpoint	OFF, 7ºC~25ºC	OFF
P205	Cooling switch-on setpoint	OFF, 7ºC~25ºC	OFF
P206	Recommended DHW switch-on setpoint	OFF, 25ºC~70ºC	OFF
P207	DHW switch-on setpoint	OFF, 25ºC~70ºC	OFF
P208	SG Ready function heating devices	0: Heat pump + E1/E2 1: E1/E2 2: Heat pump only	OFF

NOTE: Any settings not shown in the table are technical parameters set by default and must not be changed under any circumstances. Changing any these settings could cause malfunction and/or breakage of the heat pump.

15.2 Operating Status

On the sub-menu "Operating status", a descriptive diagram of the heat pump allows to **view** and check any time the status of all the heat pump's control and safety components and the values of some of the operating parameters.

Also, on the main "Operating Status" screen, you can press the  to access the heat pump's **C** parameters or Status parameters of the heat pump. The status parameters are display parameters, they are therefore not adjustable and their purpose is to diagnose the functioning of the appliance during maintenance and repair operations. Once in the menu, press ⇦ and ⇨ buttons to browse through the **C** parameters.

NOTE: The parameters labelled "Reserved" on the table do not apply to these heat pump models and are therefore not relevant.

Code.	Definition	Unit	Range
C00	Evaporator temperature sensor	°C	
C01	Discharge temperature sensor	°C	
C02	Outdoor temperature sensor	°C	
C03	Suction temperature	°C	
C04	Reserved		
C05	Reserved		
C06	Heat exchanger sensor temperature	°C	
C07	Return water temperature sensor	°C	
C08	Flow water temperature sensor	°C	
C09	DHW temperature sensor	°C	
C10	Water flow	l/min	
C11	Main temperature difference	°C	
C12	Reserved		
C13	High pressure	Mpa	
C14	Low pressure	Mpa	
C15	Compressor operating frequency	Hz	
C16	Fan 1 speed	rpm	
C17	Fan 2 speed	rpm	
C18	Expansion valve opening degrees	°	
C19	Reserved		
C20	Target compressor frequency	Hz	
C21	Compressor operating current	A	
C22	IPM module temperature	°C	
C23	Input voltage (AC)	V	
C24	Input voltage (DC)	V	
C25	Reserved		
C26	Reserved		
C27	Evaporation temperature	°C	
C28	Condensation temperature	°C	
C29	TAF enabled	0/1	off: Connected, on: Disconnected
C30	TAF enabled	0/1	off: Connected, on: Disconnected
C31	Anti-legionella function	0/1	off, on
C32	Compressor overcurrent protection	0/1	off, on
C33	Defrost	0/1	off, on
C34	Heating anti-freeze	0/1	off, on
C35	DHW anti-freeze	0/1	off, on
C36	Compressor heating element	0/1	off, on
C37	4-way valve	0/1	off: Cold, on: Heat
C38	3-way valve G1	0/1	off: Heat/Cold, on: DHW
C39	3-way valve G2	0/1	off: Cold, on: Heat
C40	Backup energy for DHW E1	0/1	off, on
C41	Heating backup energy E2	0/1	off, on
C42	Main circulation pump C1	0/1	off, on
C43	Circulation pump C2	0/1	off, on
C44	Backup pump C3	0/1	off, on
C45	Heating temperature setpoint	°C	
C46	Cooling temperature setpoint	°C	
C47	DHW setpoint temperature	°C	
C48	Anti-legionella temperature setpoint	°C	
C49	Lubricant return process	0/1	0: off, 1: on
C50	Compressor run time	hours	
C51	Circulation pump C1 speed	0~100%	
C52	Heat pump operating mode	0/4	0: Standby, 1: DHW, 2: Heating, 4: Cooling

Code.	Definition	Unit	Range
C53	Reserved		
C54	Selected operating mode	0/5	0: Standby, 1: DHW, 2: Heating, 3: DHW+Heating, 4: Cooling, 5: DHW + Cooling
C55	PCB software version	/	
C56	Software display version	/	
C57	Buffer tank temperature	ºC	
C58	Outdoor temperature (OTC)	ºC	
C59	Reserved		
C60	SG1 Input	0/1	0: Disabled 1: Enabled
C61	SG2 Input	0/1	0: Disabled 1: Enabled
C62	Humidity sensor	0/1	0: Disabled 1: Enabled
C63	Circulation pump C4	Off/On	Off: Disabled On: Enabled
C64	Reserved		
C65	Reserved		
C66	Reserved		
C67	Heating mode in cascade	0/1	0: Disabled 1: Enabled
C68	Cooling mode in cascade	0/1	0: Disabled 1: Enabled
C69	Power exceed measured by the energy counter device	W	
C70	Solar energy utilisation function	Off/On	Off: Disabled On: Enabled
C71	Reserved		
C72	Zone 1 room temperature	ºC	
C73	Zone 2 room temperature	ºC	
C74	Zone 2 room temperature	ºC	
C75	OTC outdoor temperature	ºC	
C76	Zone 2 combined water flow temperature	ºC	
C77	Reserved		
C78	Software version of the **DUAL CLIMA** outdoor unit	-	
C79	Software version of the **iConnect** module	-	
C80	Software version of the **CCDPB_AIR1** module	-	
C81	Software version of the **CCDPB_AIR2** module	-	
C82	Reserved		
C83	Reserved		

15.3 Pair Wireless Devices

This function will only be available when there is an **iConnect** communications module connected to the **Easy Connect** indoor unit, as well as a **Receptor RF iC** radio module connected to the **Modbus** input (+A/-B) of the **iConnect** module (see *"Installation with wireless devices Confort iC and/or Sonda iC (Optional)"*).

This option enables pairing and unpairing the wireless devices with the **Receptor RF iC** radio module and linking it to the corresponding heating/cooling zone.

Enter the "Pair Wireless Dev." sub-menu, which will display the heating/cooling zones available in the installation and the outdoor temperature sensor. Take the following steps in the order shown to complete the pairing and unpairing process successfully:

1. To **pair** a wireless device, select the Zone to be linked to it by pressing the corresponding button ☐. The pairing process will be activated, indicated by the flashing, while the heat pump waits for pairing to be completed.

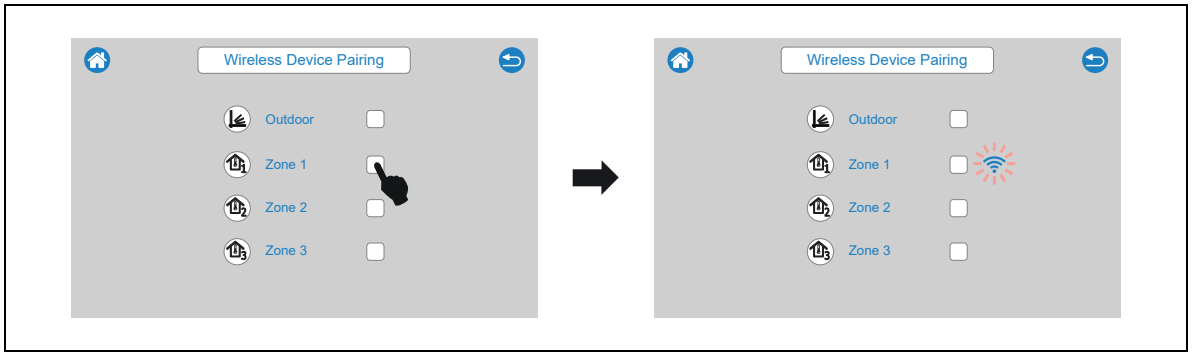

2. Pairing must be performed from the wireless device. Pairing will be carried out differently, depending on the type of wireless device (**Confort iC** or **Sonda iC**) (see the instruction manual provided with each device for further information):

   - **Confort iC** remote control: Access the "**PAr**" option (**P03**) of the control panel user menu and press the centre button ✓ on the device. The remote control will start the pairing process by trying to connect to the radio module for a maximum period of 4 minutes. If the connection is completed satisfactorily, "**End**" and "**Succ**" will be displayed on the control screen. Press the central button ✓ again to return to the main screen and wait for the symbols ⚠ and to stop flashing and disappear (for no more than 2 minutes). The pairing process is now complete.
   - **Sonda iC** temperature sensor: This wireless device is paired by pressing the button located at the rear of the device and waiting until the red led to its right stops flashing. When this occurs, the pairing process of the wireless sensor has been completed.

3. After completing the pairing process successfully, the control panel will display the activated zone button ☑ and the communication icon in green, indicating that the device is paired and correctly linked to the selected Zone.

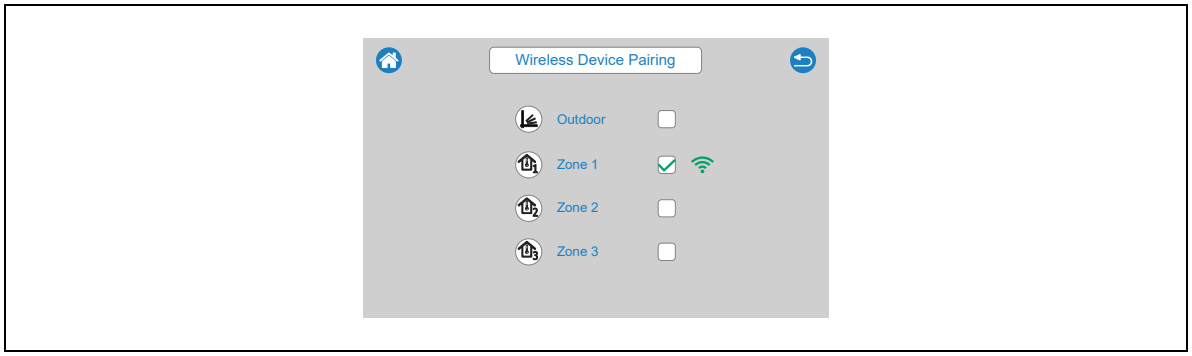

4. To unpair a wireless device, select the Zone that it was linked to by pressing the corresponding button ☑. A confirmation screen will appear. After confirming the desire to unpair the device by pressing the button ✗, the heat pump will unpair the selected device and display the inactive Zone button ☐ and the communication icon will be deleted. A physical wireless device is not required to unpair a device.

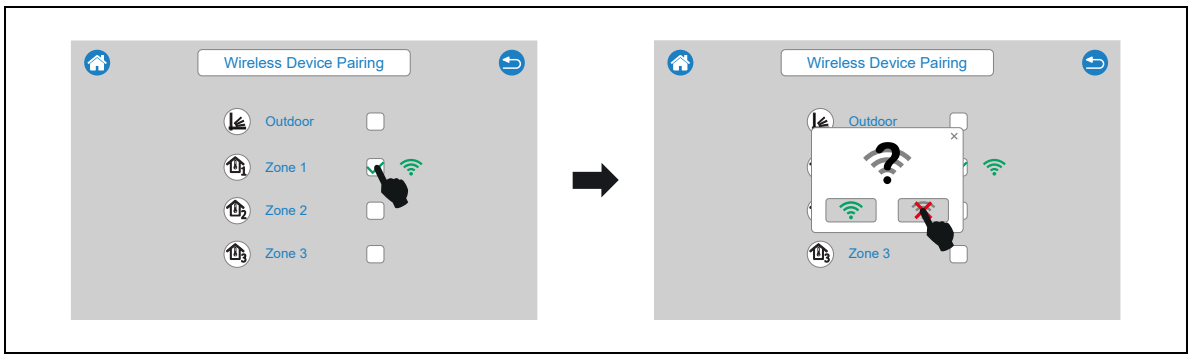

For further information about the installation and operation of the **Confort iC** remote control and the **Sonda iC** temperature sensor, carefully read the instructions provided with these devices.

16 SETTING UP THE HEATING/COOLING CIRCUITS

The **DUAL CLIMA HT EC PRO** heat pump is equipped with an electronic control unit capable of efficiently adjusting automatic operation of the heat pump. It also includes the following functions to control the heating/cooling circuits:

16.1 Operation of the circulation pump (P20)

The electronic control unit is used to select the operating mode of the heat pump's circulation pump (**C1**) via parameter **P20** in the "System parameters" menu. The following operating modes can be selected:

P20 = 0 => Continuous operation (default setting): the circulation pump will run whenever a Heating or Cooling operating mode has been selected, regardless of demand from the installation circuits.

P20 = 1 => Normal operation: the circulation pump will run as long as there is heating/cooling demand in any of the heating/cooling circuits in the installation. The circulation pump will shut down when the demand stops in all the circuits.

P20 = 2 => Periodic operation: the circulation pump will stop when there is no demand from any of the heating/cooling circuits and will start up every 15 minutes, during 1 minute, until demand is detected.

16.2 Zone 2 combined circuit temperature limit (P165)

The electronic control unit can be used to adjust the maximum temperature setpoint setting for the water flow in the Zone 2 combined circuit, connected to the heat pump through the optional **AIR Hydraulic Kit**. Parameter **P165** in the "System parameters" menu is used to adjust the maximum flow temperature. The range of parameter **P165** is 45 - 70ºC and the default factory setting is 45ºC (combined circuit for underfloor heating). This parameter must be adjusted by qualified staff; incorrect adjustment may result in damage to the installation and/or home.

IMPORTANT: DOMUSA TEKNIK shall not be held liable for damage and/or malfunctions affecting either the installation or the home, caused by incorrect adjustment of this parameter setting.

16.3 Room device type (P150, P151, P152)

The **DUAL CLIMA HT EC PRO** heat pump can use 2 types of devices to manage the room temperature conditions of each heating/cooling zone it is connected to inside the home. Parameters **P150** (Zone 1), **P151** (Zone 2) and **P152** (Zone 3) of the "System parameters" menu **must be used** to select the type of device installed in each heating zone.

P150, P151 or P152 = 4 => Room temperature sensor.
P150, P151 or P152 = 5 => Room temperature thermostat.

If the user chooses to install a wireless room device in any of these Zones, it will not be necessary to adjust these parameters.

16.4 Room temperature hysteresis (P117, P118)

Parameters **P117** and **P118** are used to adjust the room temperature hysteresis needed to reactivate demand. This is the temperature drop required to reactivate heating demand once the desired room temperature is reached. Choosing this parameter setting appropriately will prevent unnecessary activation of heat pump heating/cooling demand and optimise its operation. The ideal setting will depend on the degree of thermal isolation in the home; the greater the insulation, the lower the setting required, and vice versa. These parameters are only applied to heating zones where a room device is connected. Parameter **P117** affects hysteresis in room heating mode and **P118** does the same for the cooling mode. The range of these parameters is 0.2 - 5ºC and the default factory setting is 0.5ºC.

16.5 Room temperature correction (P146, P147, P148)

These parameters are used to compensate differences in temperature readings in the connected room temperature sensors, regardless of type. The range of parameter **P146** (Zone 1), **P147** (Zone 2) and **P148** (Zone 3) is -5.0 - +5.0ºC and the default setting is 0.0ºC.

17 CONFIGURING THE AUXILIARY OR BACKUP ENERGY SOURCES (E1, E2)

The operating principle of **DUAL CLIMA HT EC PRO** heat pumps is to extract energy from the air outside the building and transmit it to the interior to heat or cool a water circuit for either heating/air conditioning and/or DHW production. The heating capacity of the heat pump will therefore directly depend on the amount of energy available in the air outside the building and consequently on the weather conditions (temperature and humidity) in the exterior environment.

As a result, in extremely cold weather conditions and/or if the heat pump is located in a geographical area with high humidity, it may require the aid of a backup or auxiliary energy source to achieve the desired comfort conditions. The **Easy Connect** module is therefore equipped with 2 relay outputs (**E1**, **E2**) for connecting these auxiliary energy sources, which may be heating elements, a gas boiler, an oil-fired boiler, etc. or any combination of these. One of the two outputs is for backing up DHW production (**E1**), and the other is for backup in heating mode (**E2**). For a correct installation and electrical connection, carefully read the "*Indoor module installation instructions*" section in this manual.

The operating mode of these outputs, according to the external temperature conditions, can be configured via parameter **P81** of the System Parameters. There are 4 different operating modes to choose from. The selection of the operating mode depends on type of installation and the typology of backup device available. Therefore, the selection of operating mode and the adjustment of correspondent parameters must be made by qualified technical personnel. The diagram below shows the energy sources available according to the external temperature and the operating mode selected for parameter **P81** of the System Parameters.

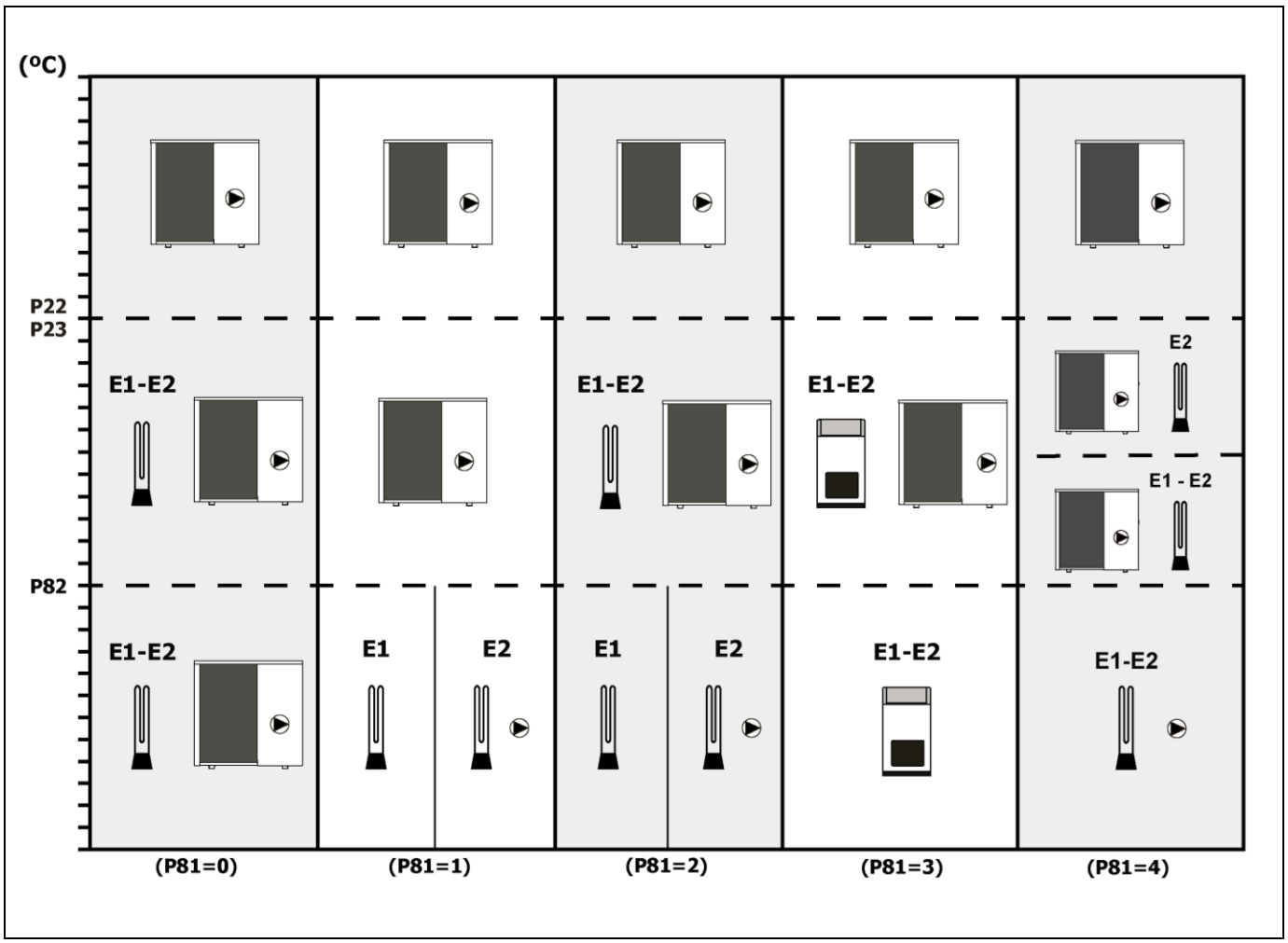

17.1 Backup source mode (P81 = 0)

In this operating mode, the auxiliary energy sources are activated when the external temperature falls below a value selected for parameters **P22** (Heating backup) and **P23** (DHW backup) of the "System Parameters" (see "*Settings Menu*"), to aid and complete the performance of the heat pump. The heat pump will continue running at the same time as the backup sources. This is the pre-set default operating mode.

Configuring the backup source for DHW (E1)

When the heat pump is running in DHW mode, the energy source connected to output **E1** will be enabled if the external temperature falls below the value selected for parameter **P23** and the heat pump is not able to reach the set DHW production conditions. When the backup energy source is activated, both the heat pump and the backup source will run simultaneously to achieve the desired performance. The selectable range of values for parameter **P23** is -30 ~ +20 ºC. The pre-set default value is 0ºC.

Configuring the backup source for Heating (E2)

When the heat pump is running in Heating mode, the energy source connected to output **E2** will be enabled if the external temperature falls below the value selected for parameter **P22** and the heat pump is not able to reach the set heating conditions. When the backup energy source is activated, both the heat pump and the backup source will run simultaneously to achieve the desired performance. The selectable range of values for parameter **P22** is -30 ~ +20 ºC. The pre-set default value is 0ºC.

17.2 Auxiliary source mode (P81 = 1)

In this operating mode, the backup energy source for Heating (**E2**) becomes an alternative source to the heat pump ("auxiliary source"). It is activated when the external temperature falls below the value selected for parameter **P82** of the System Parameters (see *Settings Menu*). The heat pump will then switch off (Standby mode), leaving auxiliary sources **E1** and **E2** as the sole heat source for the system.

The domestic hot water (DHW) backup power source **(E1)** is activated when the heat pump is operating in DHW mode, and the heating backup power source **(E2)** is activated when the heat pump is operating in heating mode.

The selectable range of values for parameter **P82** is -30 ~ +20 ºC. The pre-set default value is -15ºC. This setting can be increased or decreased by entering the desired value on the drop-down sub-menu.

17.3 Passive combined mode (P81 = 2)

This operating mode is optimised for installations that combine the "Backup source mode" and the "Auxiliary source mode", using **passive** auxiliary energy sources that do not generate primary water circulation such as an electric element, a heat exchanger, etc.

When the external temperature falls below the value selected for parameters **P22** (Heating backup) and **P23** (DHW backup) of the "System Parameters", the auxiliary energy sources **E2** and/or **E1** are activated in combination with the heat pump, as described in the section *"Backup source mode"*.

If the external temperature falls below the value selected for parameter **P82** of the System Parameters, the heat pump will switch off (Standby), leaving the auxiliary sources **E2** and/or **E1** as the only heat source in the installation, **E1** for DHW tank heating and **E2** for the heating installation, as described in the section *"Auxiliary source mode"*.

NOTE: When the heating auxiliary energy source (E2) is activated, the heat pump's circulation pump (C1) is also activated.

17.4 Active combined mode (P82 = 3)

This operating mode is optimised for installations that want to combine the "Backup source mode" and the "Auxiliary source mode" using active auxiliary energy sources that generate primary circuit water circulation, such as a boiler.

When the outdoor temperature drops under the setting in system parameters **P22** and **P23**, the auxiliary energy sources will start up in conjunction with the heat pump, as described in the "*Backup source mode*" section.

If the outdoor temperature drops under the setting in system parameter **P82**, the heat pump will shut down (Stand By), and the only heat source of the installation will be auxiliary sources **E2** and **E1**, as described in the "*Auxiliary source mode*" section.

NOTE: The heat pump's circulation pump (C1) WILL NOT BE ACTIVATED in the "Auxiliary source mode"; it is therefore essential for the auxiliary energy source to be equipped with its own circulation pump.

Combined Stage Modepas (P81 = 4)

This operating mode is optimized for installations that utilize passive auxiliary energy sources that operate in stages and do not generate primary water circulation, such as a staged electric resistance heater.

Heating Mode Operation

In heating mode, when the outdoor temperature drops below the value selected by parameter **P22** in the System Parameters, auxiliary energy source **E2** will activate in conjunction with the heat pump.

Furthermore, once the outdoor temperature drops below the average value between parameters **P22** and **P82** in the System Parameters, auxiliary energy sources **E2** and **E1** will activate in conjunction with the heat pump.

If the outdoor temperature falls below the value selected by parameter **P82** in the System Parameters, the heat pump will switch off (Standby), leaving auxiliary energy sources **E2** and **E1** as the sole heat source for the installation.

Domestic Hot Water (DHW) Operation

In DHW mode, when the outdoor temperature drops below the value selected using parameter P23 in the System Parameters, the auxiliary energy source E1 will activate in conjunction with the heat pump.

If the outdoor temperature falls below the value selected in parameter P82 of the System Parameters, the heat pump will switch off (Standby), leaving the auxiliary energy source E1 as the sole heat source for the system.

NOTE: Whenever an auxiliary energy source (E2 or E1) is activated, the heat pump's circulation pump (C1) is also activated.

18 COMMISSIONIING

18.1 Prior warnings

Repair and maintenance of the heat pump must be carried out by a qualified professional authorised by **DOMUSA TEKNIK**. For optimum functioning and conservation of the heat pump, it should be serviced annually.

Please carefully read this instruction manual and keep it in a safe, easily-accessible place. **DOMUSA TEKNIK** will not be liable for any damages caused by failure to follow these instructions.

Before any servicing, **disconnect the heat pump from the mains**.

18.2 Commissioning

In order for the **guarantee to be valid**, the heat pump must be commissioned by **personnel authorised by DOMUSA TEKNIK**. Before beginning the commissioning process, the following must be complied with:

- The heat pump must be plugged in to the mains and the correct electrical supply must be used.
- The installation must be filled with water (the pressure must be between 1 and 1.5 bar) and correctly air bled.
- If the installation has flow and return valves, check they are open.

The commissioning process must include the following steps, at least:

- Check that the heat pump configuration is correct and corresponds to the Heating, Cooling and/or DHW modes permitted for the installation.
- Check that all the technical parameters on the Settings Menu have been correctly set and adjust them if necessary.
- Check that the heat pump and internal piping system have not been damaged during transport.
- Check that the fan can move freely.
- Check that all the pipes are correctly insulated, particularly in the case of installations that can be used in Cooling mode.

18.3 Installation handover

After the initial commissioning, the Technical Assistance Service will explain to the user how the heat pump functions, making any observations they consider relevant.

The installer is responsible for clearly explaining to the user the functioning of any control or regulation device forming part of the installation but not supplied with the heat pump.

19 MAINTENANCE

To maintain the heat pump in perfect working order, a yearly overhaul should be performed by **DOMUSA TEKNIK**'s authorised personnel. Among other maintenance work, the following must be carried out at least once a year:

- Check that the supply, consumption and electrical system are all correct.
- Check that the water installation, the safety valves and the installation control devices are all working correctly.
- Check that the water circulation pump is working correctly. Make sure there are no leaks or obstructions in the water pipes and pipe accessories.
- Clean any dirt from the evaporator.
- Check that the various components of the gas circuit are functioning correctly. Inspect the pipe joints and make sure the valves are correctly oiled.
- Chemically clean the plate heat exchanger every 3 years.
- Check that the refrigerant gas content is correct.
- Check that the refrigerant gas leak safety systems are functioning correctly and are not obstructed.

20 RECYCLING AND DISPOSAL

Removal

This product must be removed by personnel authorised to handle fluorinated gases.

The heat pump contains R290 refrigerant. Any leakage of refrigerant into the atmosphere must be avoided.

Recycling

Take the heat pump to a waste collection point for recycling or disposal. Contact qualified personnel for the handling of fluorinated gases. Contact the installer or the local authority for more information.

Disposal

Do not attempt to remove this product on your own.

Its removal and the treatment of the refrigerant, oil and other components must be carried out in accordance with local and national legislation. The entire unit, including the refrigerant gas, the compressor and the oil it contains, must be taken to a waste collection point as it could contain refrigerant residue.

All the refrigerants must be removed and returned to the manufacturer for recycling or disposal.

IMPORTANT: The refrigerant gas contained in the heat pump is highly flammable and can cause damage to persons or property.

21 ELECTRICAL DIAGRAMS

21.1 Nomenclatures

Indoor module components:

Input terminal strip X1:

TAC: Heating room thermostat.
TAF: Cooling room thermostat.
Hu: Humidity sensor.
SG1: Contact 1 for SG Ready function.
SG2: Contact 2 for SG Ready function.
COMM2: **iConnect** Module.
A/B: **RS485** communication with the outdoor unit.
T2: Room sensor.
T4: Outside temperature sensor (OTC).
T6: Buffer tank sensor.
T12: Not used.
T13: DHW temperature sensor.
HMI: Control panel.

Output terminal strip X2:

C1: Main circulation pump.
C2: Heating/cooling backup circulation pump.
C3: DHW backup circulation pump.
C4: Installation circulation pump.
G1: 3-way Heating/DHW valve.
G2: 3-way Heat/Cold valve.
E4: Cascade function output for Cooling mode.
E3: Cascade function output for Heating mode.
E2: Heating backup element.
E1: DHW backup element.
TA1: Room thermostat Zone 1.
TA1: Room thermostat Zone 2.
Z1: Circulation pump Zone 1.
Z2: Circulation pump Zone 2.

Outdoor unit components:

MC: Compressor motor.
RC: Compressor heating element.
I: Inductance.
MV: Fan motor.
EEV: Electronic expansion valve.
V4V: 4-way valve.
LS: Low pressure sensor.
HS: High pressure sensor.
T1: Discharge temperature sensor.
T3: Evaporator temperature sensor.
T5: Suction temperature sensor.
T4: Outdoor temperature sensor.
T11: Return temperature sensor.
T12: Flow temperature sensor.
T16: Internal heat exchanger temperature sensor.
C1: Heat pump circulation pump.
Q: Flow meter.
A/B: **RS485** communication with the indoor module.

21.2 Indoor module Easy Connect

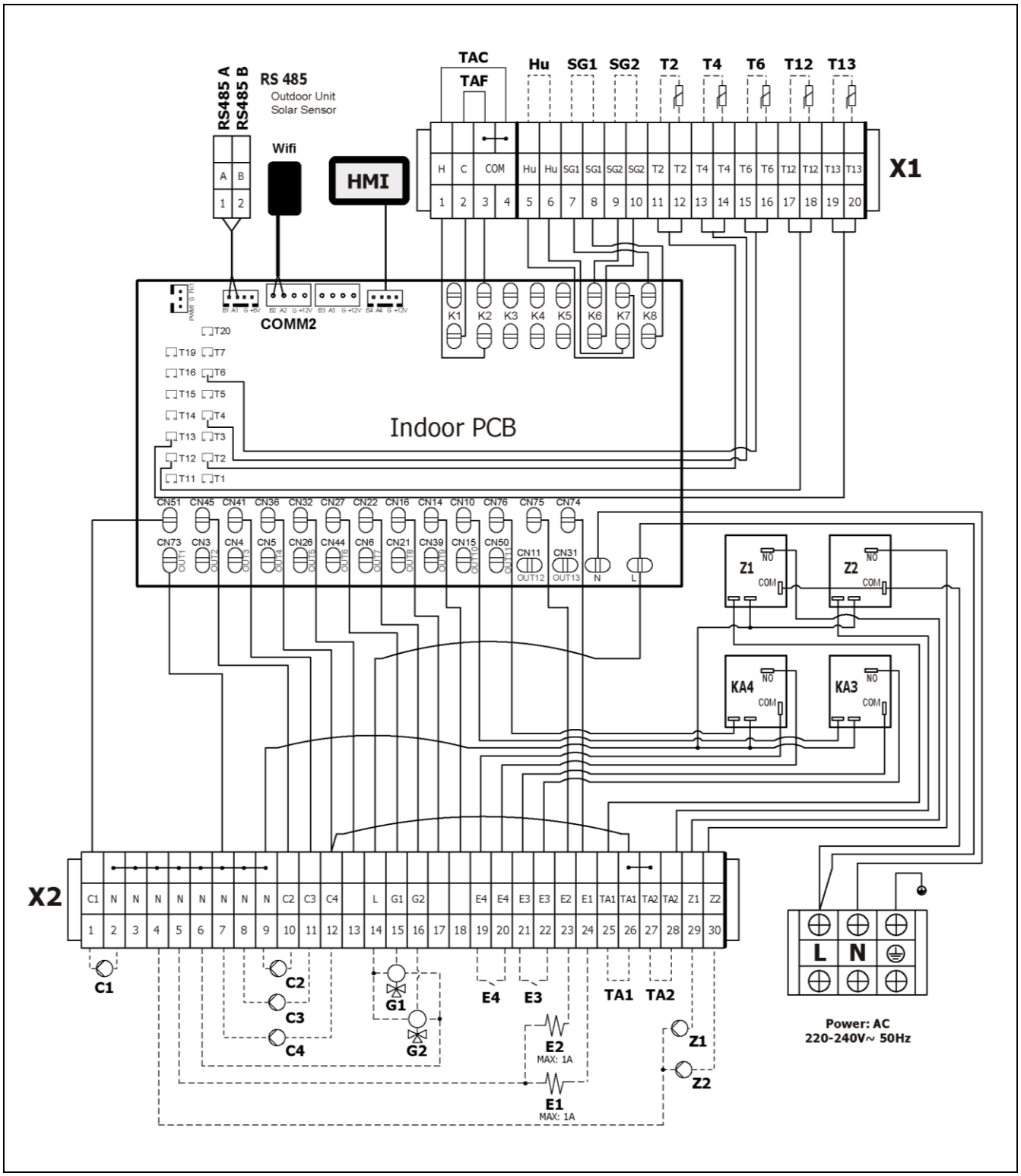

21.3 Outdoor unit DUAL CLIMA 6HT EC PRO, 9HT EC PRO, 12HT EC PRO

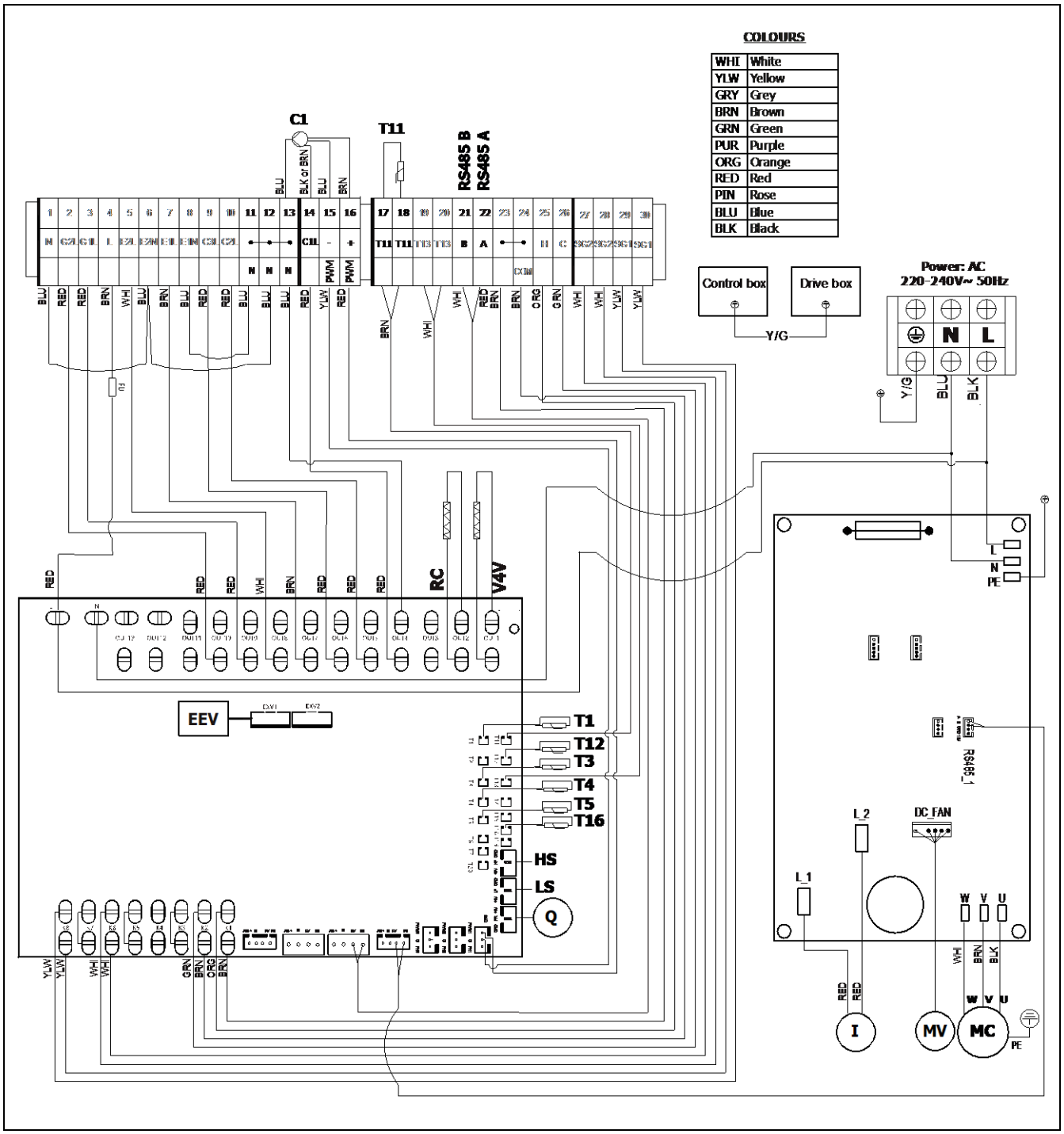

21.4 Outdoor unit DUAL CLIMA 16HT EC PRO, 19HT EC PRO

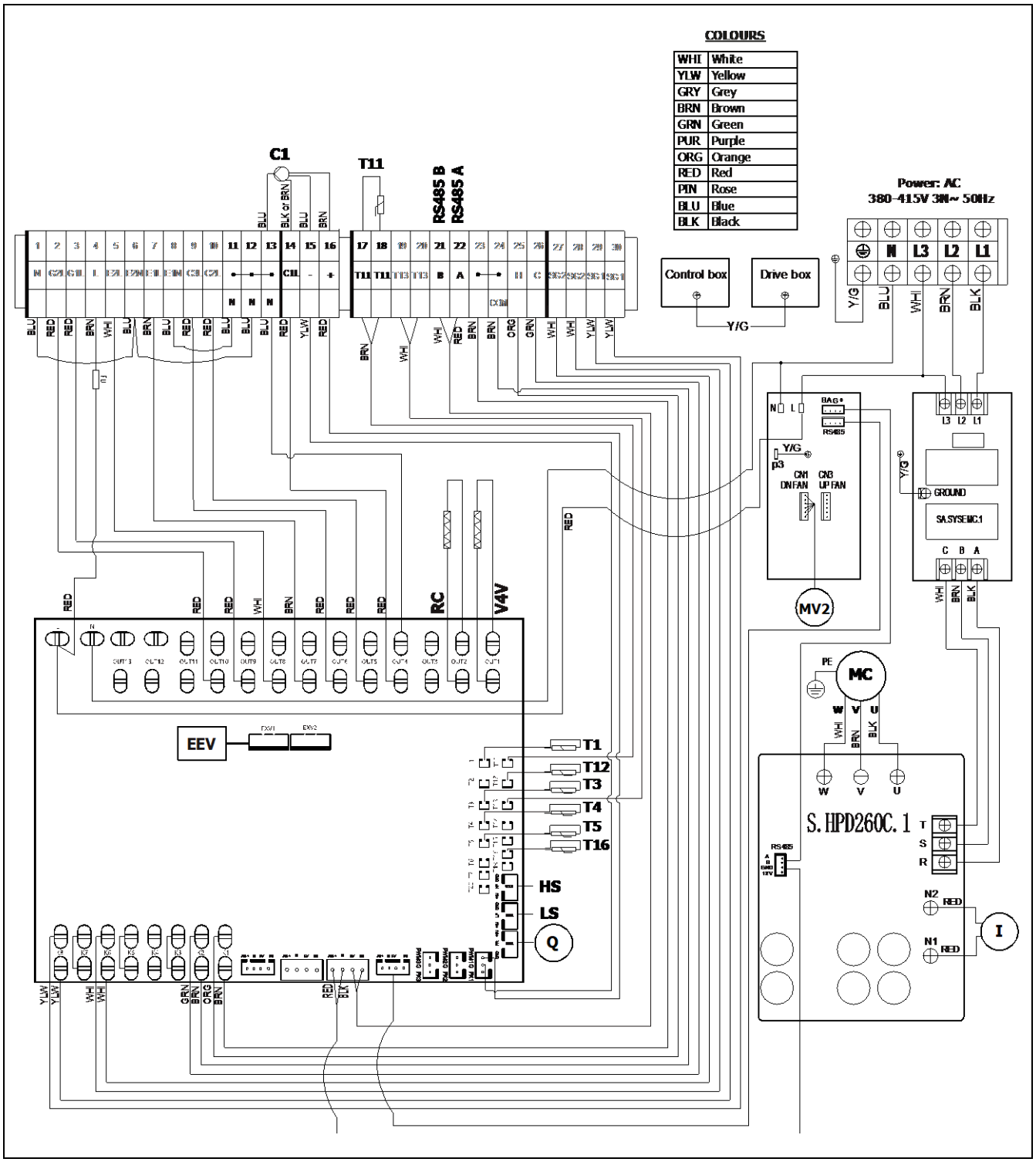

21.5 Outdoor unit DUAL CLIMA 12HTT EC PRO

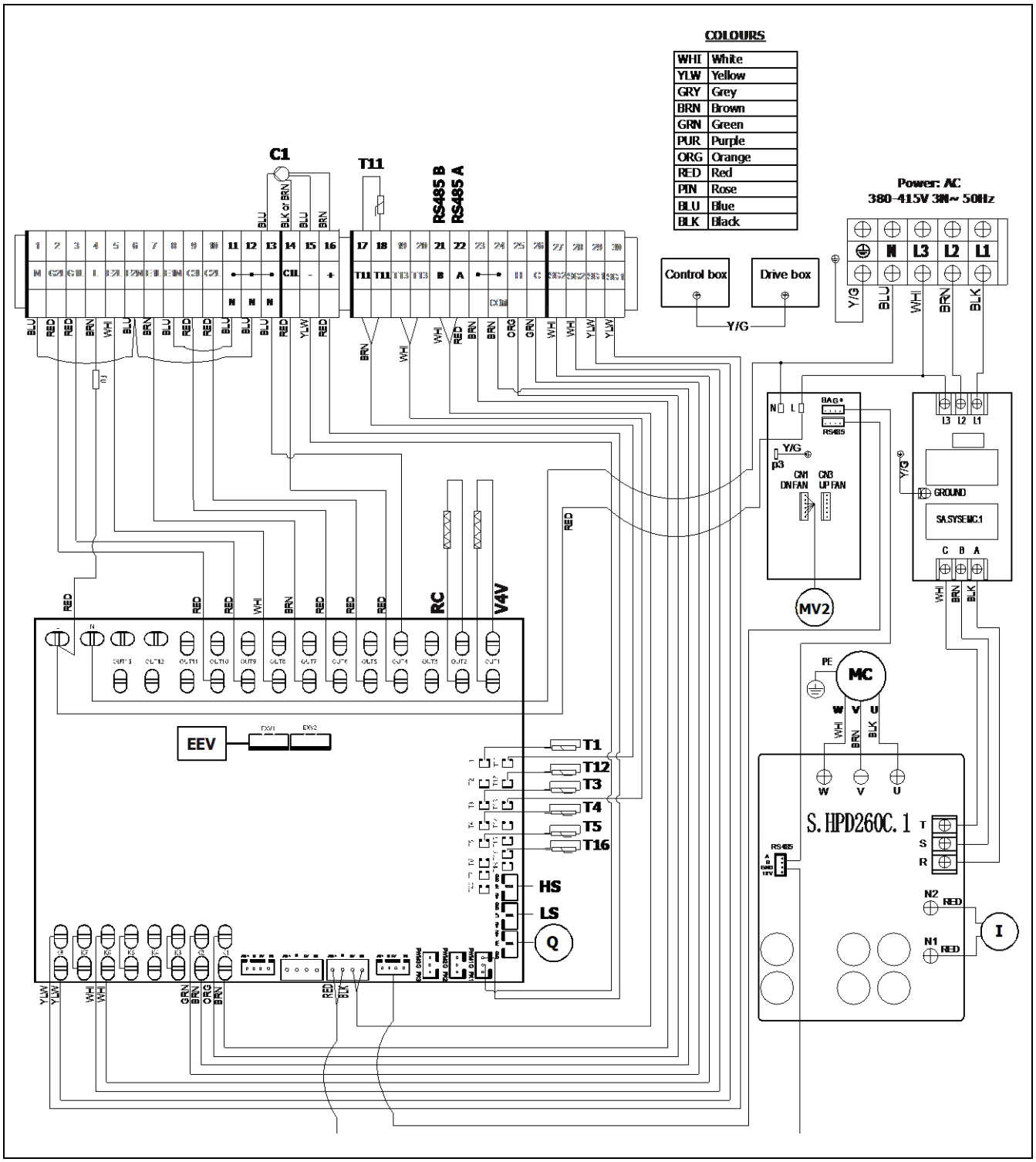

21.6 Outdoor unit DUAL CLIMA 16HTT EC, 19HTT EC, 22HTT EC

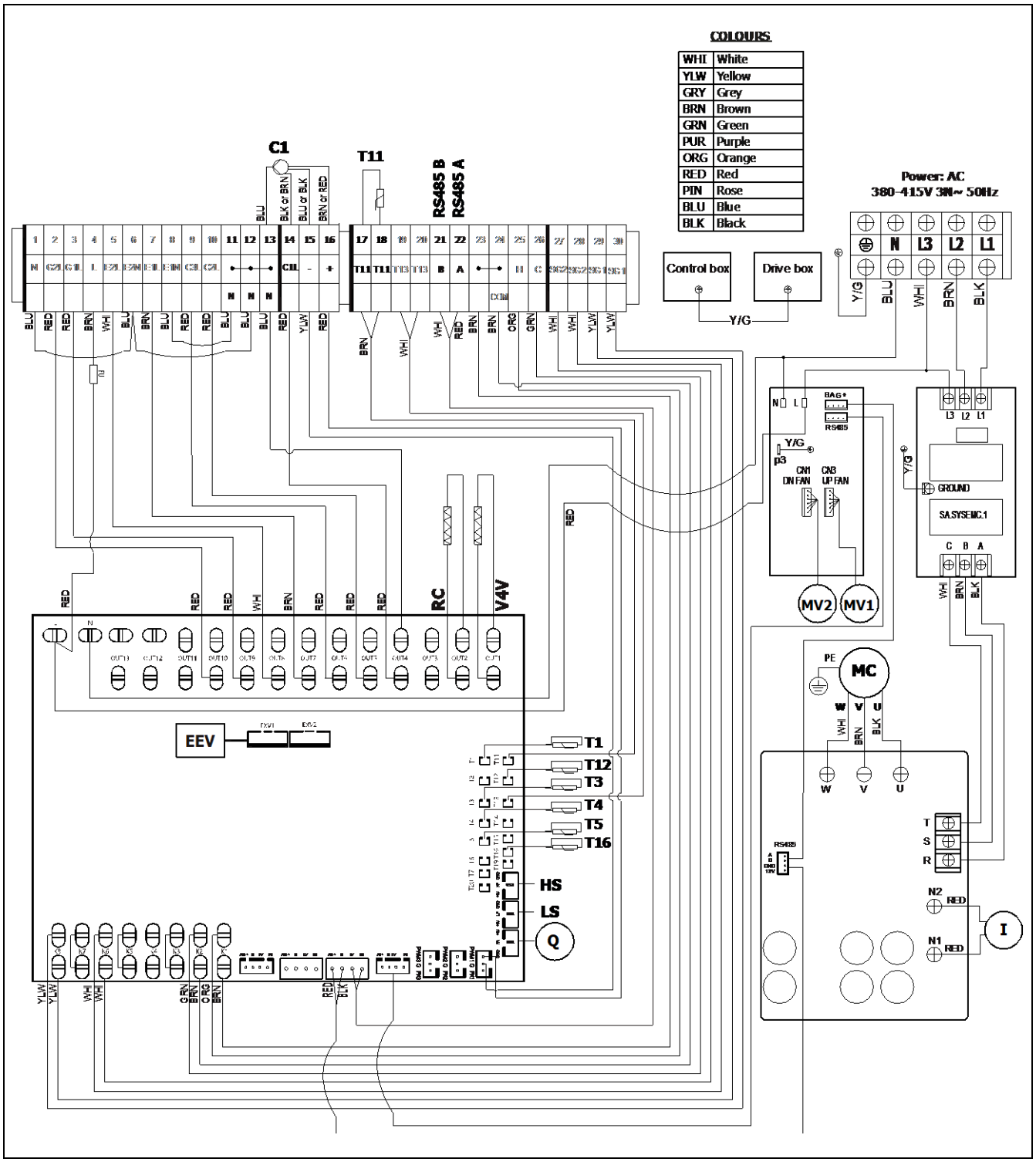

NOTES:

DOMUSA TEKNIK

POSTAL ADDRESS
Section 95
20730 AZPEITIA
Tel: +34 943 813 899

FACTORY & OFFICES
Bº San Esteban, no number
20737 ERREZIL (Gipuzkoa)
Fax: +34 943 815 666

CDOC004214 28/05/2026

www.domusateknik.com

DOMUSA TEKNIK reserves the right to make modifications of any kind to its product characteristics without prior notice.